WORKSHOP MANUAL

petrol engines

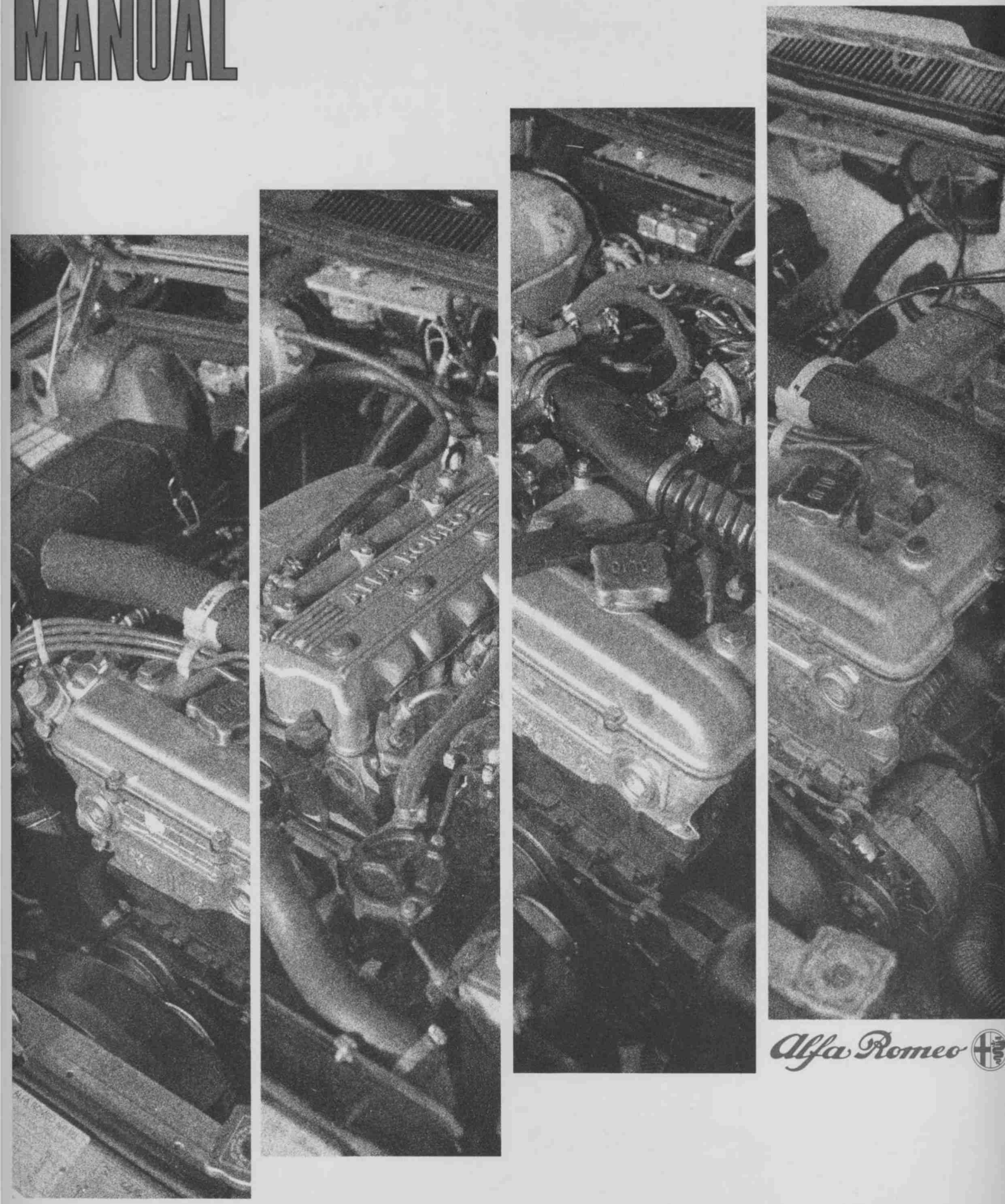

Alfa Romeo

DIREZIONE ASSISTENZA TECNICA

VOLUME I

IF NOT OTHERWISE SPECIFIED, ALL INSTRUCTIONS IN THIS PUBLICATION

CONCERNING:

- Alfa 90 1.8 (engine 062.02) .....
- Alfa 90 2.0 iniezione (engine 017.13) .....
- Alfa 90 2.5 ♣ iniezione (engine 016.46) .....
- Alfa 90 2.0 6V iniezione (engine 062.10) .....
- Alfa 75 1.6 (engine 061.00) .....
- Alfa 75 1.8 (engine 062.02) .....
- Alfa 75 2.0 (engine 062.12) .....
- Alfa 75 1.8 turbo (engine 061.34) .....
- Alfa 75 ♣ 6V iniezione (engine 016.46) .....

APPLY ALSO TO THE FOLLOWING CORRESPONDING VERSIONS

- Alfa 90 Super 1.8 (engine 062.02)
- Alfa 90 Super 2.0 iniezione (engine 017.13)
- Alfa 90 Super 2.5 6V iniezione (engine 016.46)
- Alfa 90 Super 2.0 6V iniezione (engine 062.10)
- 75 1.6 (engine 061.00)
- 75 1.8 (engine 062.02)
- 75 2.0 (engine 062.12)
- 75 i.e. TURBO (engine 061.34)
- 75 6V 2.5 (engine 016.46)
- 75 6V 3.0 (engine 061.20)

FOREWORD

This manual is intended for use by workshops belonging to the ALFA ROMEO Service Organization. It contains all necessary instructions for tune up, repair and overhaul of the mechanical units with which the ALFA ROMEO cars are equipped. It includes procedures concerning removal and installation, disassembly and assembly, checks and inspections as well as instructions for effective trouble-shooting.
All operations are extensively illustrated so that the part or unit involved, as well as the proper tool to be used, are easily identified.
All data, figures, and technical specifications herein contained are up to date at time of publication. Any subsequent change in values or technical specifications occurring between reprints, will be included in the Technical Bulletins issued by the Service Department as changes take place.
The manufacturer reserves the right to make - at any time and without notice - all those changes that it deems necessary to improve the vehicle or arising out of manufacturing or commercial requirements. It further advises that not all models mentioned in this manual will be available in all countries.

HOW TO USE THE MANUAL

This manual is designed as a guide for personnel assigned to provide effective service to the mechanical units concerned. The instructions herein contained are in general common to all different models of the same group; when they are meant for one particular model, it is previously indicated with a specific detailed reference to be found in the CONTENTS and in the text.

All instructions given for the purpose of restoring faulty components to proper working conditions, do not necessarily reflect manufacturer's directives as regards service, but they must just the same be complied with. Furthermore, since most given instructions concern complete disassembly of components, they should be followed in their entirety only when it is strictly necessary.

For easier consultation of the manual, read the CONTENTS carefully.

The manual contains a SERVICE DATA AND SPECIFICATIONS chapter to be complied with when tuning up and repairing the vehicle. The specifications have been subdivided into four different items: Technical Data, General Specifications, Inspections and Adjustments, and Tightening Torques.

The manual also contains a TROUBLE DIAGNOSIS AND CORRECTIONS chapter where likely causes of trouble, as well as the relevant recommended corrective action, are listed.

The manual contains a list of SPECIAL SERVICE TOOLS designed to allow quick, accurate and safe repairs.

Measurements given in this manual are expressed in the International System of Units (SI) as well as in the metric system and in the yard/pound system.

Captions CAUTION and WARNING emphasize steps that must be followed with extreme care to avoid personal injury and/or damage to the vehicle or part of it.
Remember to keep the manual up-to-date with the data supplied by the "Technical Bulletin" periodically issued by the Service Department.

WORKSHOP INSTRUCTIONS

Disassembly and assembly operations should be always carried out using proper tools (general-purpose as well as special service tools) since makeshift tools will damage the parts involved.

To loosen tight fitting cast iron parts, just lightly strike them with a lead or aluminium hammer; use a wooden or plastic mallet to loosen light alloy parts.
Separate one by one the parts making up each unit and partially tighten nuts onto relevant studs or screws.

On disassembly, check if parts that should be marked do in fact have the relevant number or reference stamped on it. Any previously replaced part is found to be not properly marked, it should be stamped accordingly.

Before washing, clean all parts with a brush and cloth removing most dirt (thus avoiding needless dirtying of the washing fluid); then wash them with detergent or special compound. Remove any residual dirt with a jet of compressed air. Dry all parts immediately after washing to prevent them from rusting.

Thoroughly wash parts that have been ground or lapped and blow them with a jet of compressed air to remove all residues.

On assembly, clean all parts (especially those that have been ground) with a jet of compressed air or a clean brush.
On assembly also suitably lubricate parts (except self-lubricating bushes) to prevent seizure during their running-in period.
To apply lubricant, use a clean brush as well as clean oil keeping them away from dust and dirt at all times and using them only for this special purpose.

Suitably protect with adhesive tape or clean cloths all engine parts that after disassembly show orifices or drilling which are likely to let in dust or foreign matter.

On assembly, replace all gaskets, seal rings, spring washers and lock rings in addition to all worn or damaged parts.

IMPORTANT NOTICE

When replacing units or parts thereof, be sure to use only original spare parts to ensure interchangeability as well as proper performance.

When ordering, remember to show the part number taken from the Spare Parts Catalogue or from the microfiches.
Service quality varies according to procedures used, personnel skill, and available tools and parts.

QUICK REFERENCE INDEX

COMPLETE CAR	GR. 00
ENGINE MAIN MECHANICAL UNIT	GR. 01

GROUP 00

CONTENTS

GENERAL VIEWS 00-2
Dimensions (Alfa 90 - Alfa 90 Super - Alfa 75) 00-2
Dimensions (75) 00-2/1
Dimensions (Giulietta - Alfetta - GTV 2.0 - GTV 6 2.5) 00-3
Weights and loads (Alfa 90 - Alfa 90 Super - Alfa 75 - Giulietta - Alfetta - GTV 2.0 - GTV 6 2.5) 00-4
Weights and loads (75) 00-4/1
Wheels and tires (Alfa 90 - Alfa 90 Super - Giulietta - Alfetta - GTV 2.0 - GTV 6 2.5) 00-5
Wheels and tires (Alfa 75) 00-5/1
IDENTIFICATION DATA (Except Switzerland, Sweden and Australia) 00-5/2
Alfa 90 ..... 00-5/2
Alfa 90 Super 00-6/2
Alfa 75 00-6
Alfa 75 turbo (Except Switzerland) ... 00-6/1
75 ..... 00-6/3
Giulietta 00-7
Alfetta and GTV 2.0 00-8
GTV 6 2.5 ..... 00-8/1
IDENTIFICATION DATA (For Switzerland, Sweden and Australia) 00-9
Alfa 90 00-9
Alfa 90 Super 00-10/2B
Giulietta 00-10
Alfa 75 ..... 00-10/1
Alfa 75 ..... 00-10/2
Alfa 75 turbo (For Switzerland) 00-10/2A
GTV 6 2.5 ..... 00-10/3
Alfetta and GTV 2.0 00-11
DATA PLATES 00-12
Alfa 90 - Alfa 90 Super 00-12
Alfa 75 - 75 ..... 00-12/1
Alfa 75 turbo - 75 i.e. turbo 00-12/2
Giulietta - Alfetta - GTV 2.0 (Except Switzerland, Sweden and Australia) 00-13
Giulietta - Alfetta - GTV 2.0 (For Switzerland, Sweden and Australia) 00-14
GTV 6 2.5 (Except Switzerland, Sweden and Australia) 00-14/1
GTV 6 2.5 (For Switzerland, Sweden and Australia) 00-14/1

GENERAL VIEWS

DIMENSIONS

Alfa 90 | Alfa 90 Super

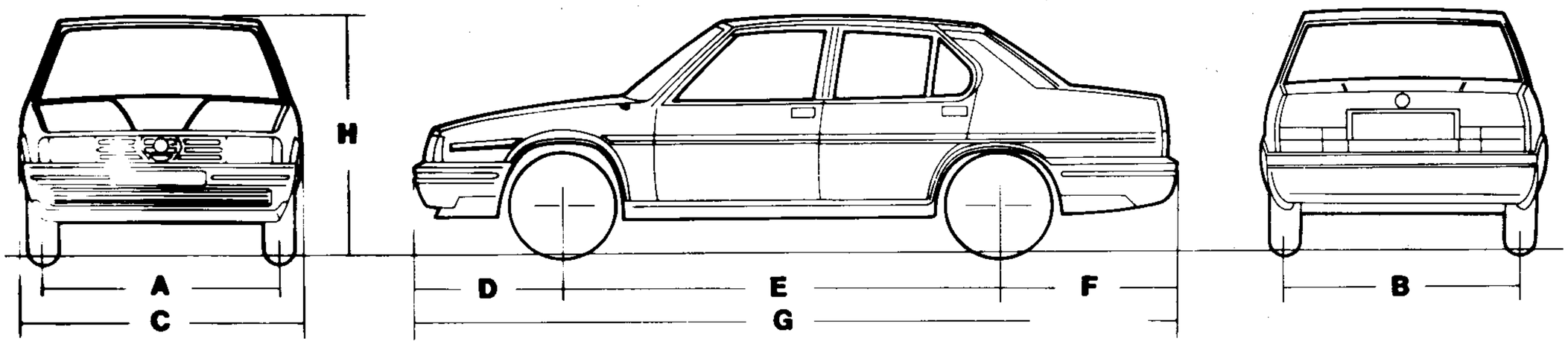

Alfa 75

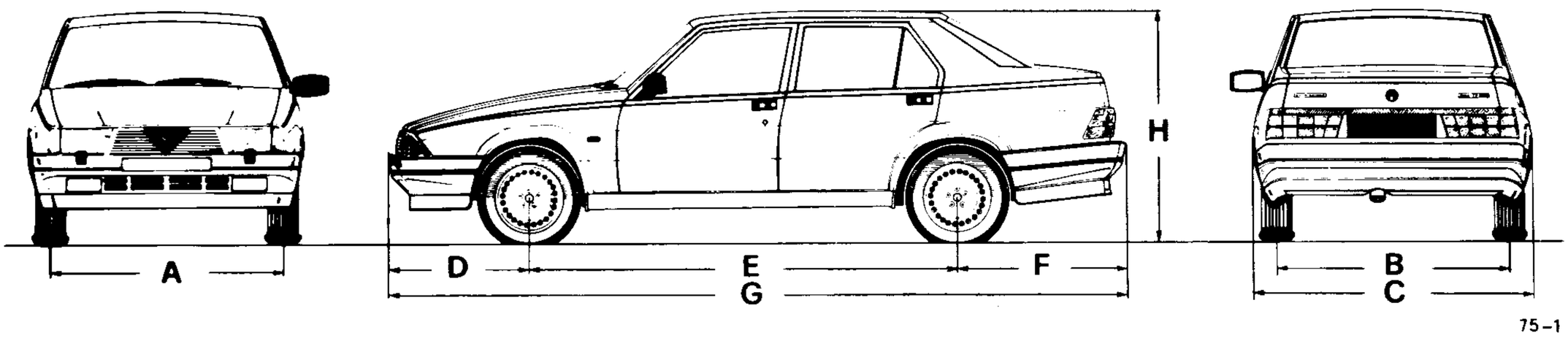

Unit: mm (in)

Model	Dimension	A	B	C	D	E	F	G	H Max	R(*)
Alfa 90 / Alfa 90 Super	1.8 2.0 (▲) 2.0 iniezione	1366 (53.8)	1358 (53.5)	1638 (64.5)	861 (33.9)	2510 (98.8)	1020 (40.2)	4391 (172.9)	1420 (55.9)	5050 (198.8)
	2.5 iniezione (•) 2.0 6V iniezione	1366 (1) (53.8) 1376 (2) (54.2)	1358 (1) (53.5) 1368 (2) (53.9)							
Alfa 75	1.6 1.8	1368 (5) (53.9)	1358 (5) (53.5)	1630 (64.2)	825 (32.5)	2510 (98.8)	995 (39.2)	4330 (170.5)	1400 (55.1)	5050 (198.8)
	1.8 turbo	1398 (55)	1388 (54.6)							
	2.0	1368 (2) (53.9)	1358 (2) (53.4)							
	6V iniezione	1368(2)(3) (53.9) 1378(1)(4) (54.3)	1358(2)(3) (53.9) 1368(1)(4) (53.9)							

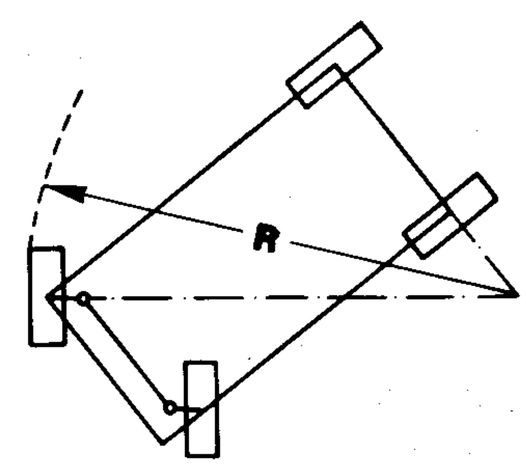

(▲) Only for Alfa 90 (•) It applies also to Alfa 90 Super 2.5 6V iniezione

(1) With rims 6J x 15 (2) With rims 5½J x 14 (3) With pressed steel rims (4) With alloy rims (5) With rims 5½J x 13

(*) Radius of the circumference described in correspondence with ground, from outer rim of the outer drive wheel, when in the full steering look conditions

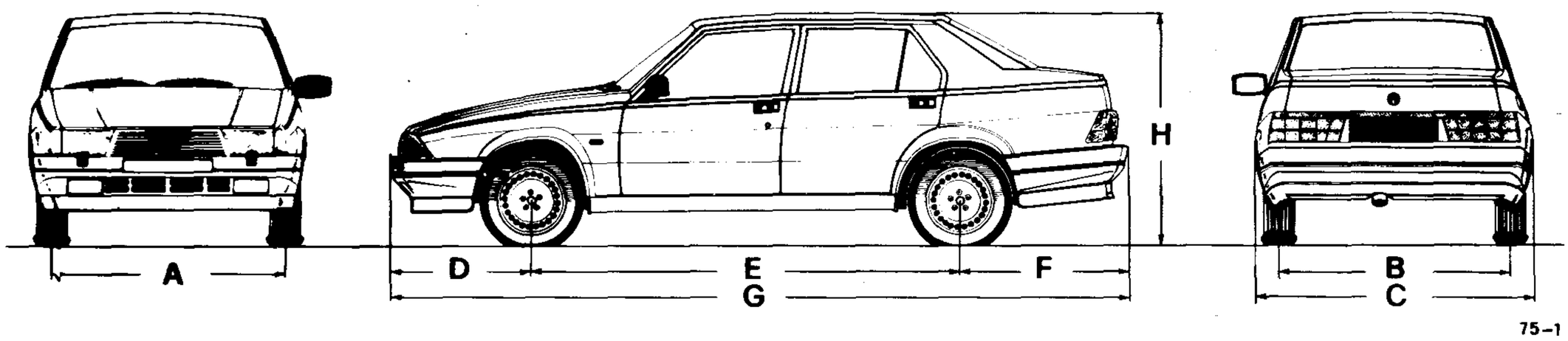

Unit: mm (in)

Model / Dimension	A	B	C	D	E	F	G	H Max	R(*)
1.6	1368 (53.9)	1358 (53.5)	1630 (64.2)	825 (32.5)	2510 (98.8)	995 (39.2)	4330 (170)	1400 (55.1)	5050 (198.8)
1.8									
2.0									
i.e. TURBO	1376 (1) (54.2) (1) 1396 (2) (55.0) (2)	1362 (1) (53.6) (1) 1382 (2) (54.4) (2)	1660 (65.4)	865 (34.1)		1045 (41.1)	4420 (174)		
Twin Spark 2.0				825 (32.5)		995 (32.9)	4330 (170.5)		
6V 2.5				825 (32.5)		995 (32.9)	4330 (170.5)		
6V 3.0	1396 (55.0)	1382 (54.4)		865 (34.1)		1045 (41.1)	4420 (174)		

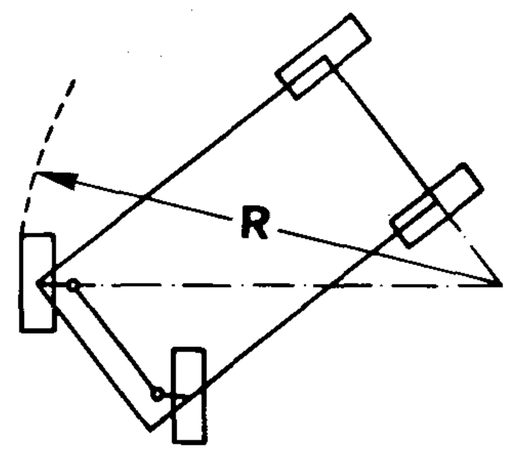

(1) With rims 5½J x 14"

(2) With rims 6½J x 14"

(*) Radius of the circumference described in correspondence with ground, from outer rim of the outer drive wheel, when in the full steering look conditions

Giulietta

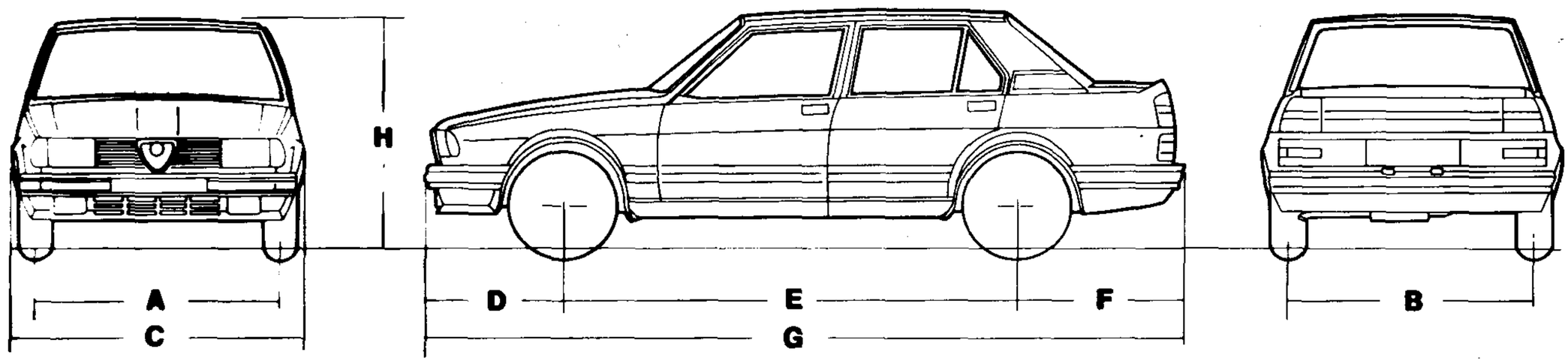

Alfetta

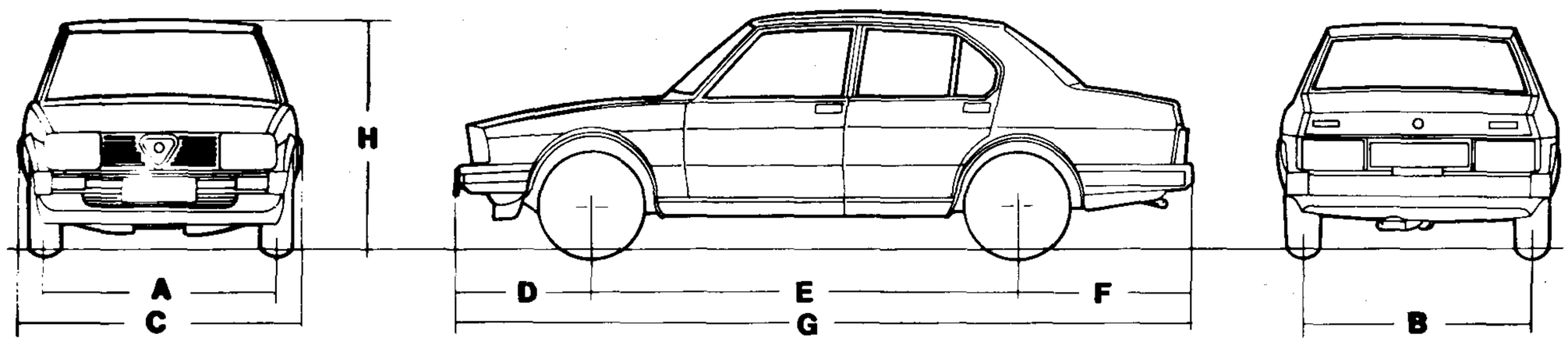

GTV 2.0 **GTV 6 2.5**

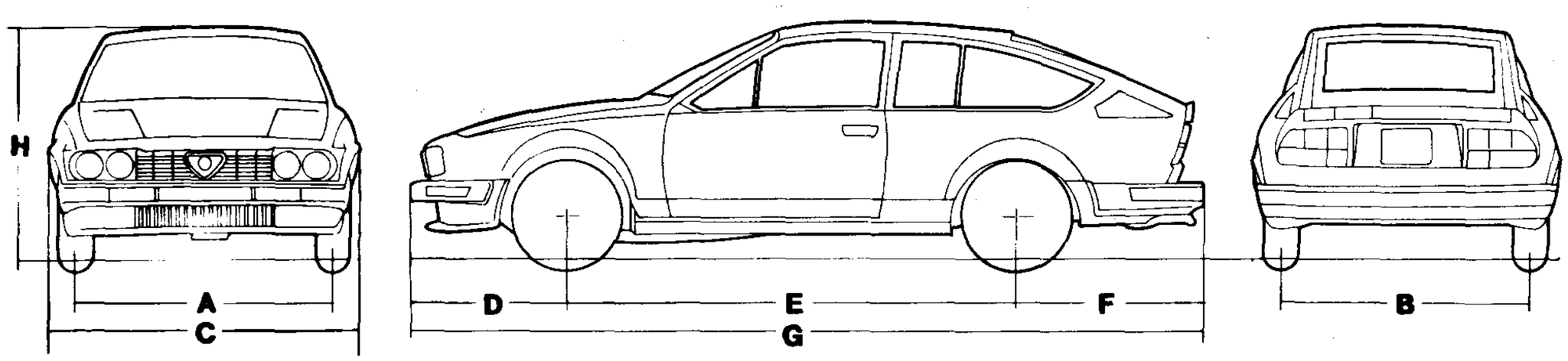

Unit: mm (in)

Model	Dimension	A	B	C	D	E	F	G	H Max	R(*)
Giulietta	1.6	1366 (1) (53.8)	1358 (1) (53.5)	1650 (65.0)	765 (30.1)	2510 (98.8)	935 (36.8)	4210 (165.7)	1400 (55.1)	5475 (215.6)
	1.8	1370 (2) (53.9)	1362 (2) (53.6)							
	2.0	1366 (53.8)	1358 (53.5)							
Alfetta	1.6 1.8 2.0 2.0 iniezione	1366 (53.8)	1358 (53.5)	1640 (64.6)	825 (32.5)	2510 (98.8)	1050 (41.3)	4385 (172.6)	1430 (56.3)	5050 (198.8)
	GTV 2.0	1364 (3) (53.7) 1374 (4) (54.1) 1364 (5) (53.7)	1358 (3) (53.5) 1368 (4) (53.9) 1358 (5) (53.5)	1664 (65.5)	855 (33.7)	2400 (94.5)	1005 (39.6)	4260 (167.7)	1330 (52.4)	5000 (196.9)
	GTV 6 2.5	1373 (54)	1352 (53.2)	1664 (65.5)	855 (33.7)	2400 (94.5)	1005 (39.6)	4260 (167.7)	1330 (52.4)	5000 (196.9)

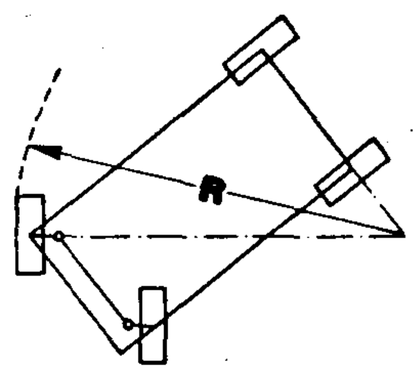

(1) With pressed steel rims (2) With alloy rims (3) With rims $5^1/_2J \times 14$ (4) With rims $6J \times 14$ (5) With rims $6J \times 15$

(*) Radius of the circumference described in correspondence with ground, from outer rim of the outer drive wheel, when in the full steering lock conditions

WEIGHTS AND LOADS

Weights and loads		Model / Version	Alfa 90 1.8	Alfa 90 2.0 (▲)	Alfa 90 Super 2.0 iniezione	Alfa 90 Super 2.5 iniezione (•) / 2.0 6V iniezione
Max. allowed gross weight	kg (lb)		1505 (3318)	1515 (3340)	1515 (3340)	1595 (3516)
Kerb weight	kg (lb)		1080 (2381)	1080 (2381)	1090 (2403)	1170 (2579)
Payload	kg (lb)		425 (937)	425 (937)	425 (937)	425 (937)
Max. allowed axle gross weight	kg (lb)	Front	820 (1807)	820 (1808)	820 (1808)	850 (1874)
		Rear	990 (2183)	990 (2183)	990 (2183)	990 (2183)
Max. towing gross weight	kg (lb)		1200 (2646)	1200 (2646)	1200 (2646)	1200 (2646)
Seating capacity		Front	2	2	2	2
		Rear	3	3	3	3

(▲) Only for Alfa 90 (•) It applies also to Alfa 90 Super 2.5 6V iniezione

Weights and loads		Model / Version	Giulietta 1.6 1.8 2.0	Alfa 75 1.6 1.8	Alfa 75 2.0	Alfa 75 6V iniezione	Alfa 75 1.8 turbo
Max. allowed gross weight	kg (lb)		1525 (3362)	1485 (3274)	1495 (3296)	1585 (3494)	1555 (3427)
Kerb weight	kg (lb)		1100 (2425)	1060 (2337)	1070 (3359)	1160 (2557)	1130 (2490)
Payload	kg (lb)		425 (937)	425 (937)	425 (937)	425 (937)	425 (937)
Max. allowed axle gross weight	kg (lb)	Front.	800 (1764)	820 (1764)	820 (1764)	850 (1874)	850 (1874)
		Rear	880 (1940)	990 (2183)	990 (2183)	990 (2183)	990 (2183)
Max. towing gross weight	kg (lb)		1140 (2513)	1100 (2425)	1100 (2425)	1200 (2646)	1200 (2646)
Max. nose weight	kg (lb)			77 (170)	77 (170)	84 (185)	55 (121)
Seating capacity		Front	2	2	2	2	2
		Rear	3	3	3	3	3

Weights and loads		Model / Version	Alfetta 1.6 1.8	Alfetta 2.0 2.0	GTV 2.0	GTV 6 2.5
Max. allowed gross weight	kg (lb)		1545 (3406)	1565 (3450)	1450 (3197)	1550 (3417)
Kerb weight	kg (lb)		1120 (2469)	1120 (2469)	1110 (2447)	1210 (2667)
Payload	kg (lb)		425 (937)	425 (937)	340 (750)	340 (750)
Max. allowed axle gross weight	kg (lb)	Front	800 (1764)	800 (1764)	800 (1764)	800 (1764)
		Rear	920 (2028)	920 (2028)	880 (1940)	920 (2028)
Max. towing gross weight	kg (lb)		1190 (2623)	1200 (2646)	1000(*) (2205)	1000 (2205)
Seating capacity		Front	2	2	2	2
		Rear	3	3	3	2

(*) For Germany, the max gradient is 15%

WEIGHTS AND LOADS

Weights and loads \ Model			75 1.6 / 75 1.8	75 2.0	75 i.e. TURBO	75 Twin Spark 2.0
Max. allowed gross weight	kg (lb)		1485 (3273)	1495 (3296)	1605 (3538)	1545 (3406)
Kerb weight	kg (lb)		1060 (2337)	1070 (2359)	1180 (2601)	1120 (2469)
Payload	kg (lb)		425 (937)	425 (937)	425 (937)	425 (937)
Max allowed axle gross weight	kg (lb)	Front	820 (1808)	820 (1808)	850 (1874)	850 (1874)
		Rear	990 (2183)	990 (2183)	990 (2183)	990 (2183)
Max. towing gross weight	kg (lb)		1100 (2425)	1100 (2425)	1200 (2646)	1200 (2646)
Max. nose weight	kg (lb)		77 (170)	77 (170)	60 (132)	60 (132)
Seating capacity		Front	2	2	2	2
		Rear	3	3	3	3

Weights and loads \ Model			75 6V 2.5	75 6V 3.0	
Max. allowed gross weight	kg (lb)		1585 (2557)	1675 (2756)	
Kerb weight	kg (lb)		1160 (3494)	1250 (3693)	
Payload	kg (lb)		425 (937)	425 (937)	
Max. allowed axle gross weight	kg (lb)	Front	850 (1874)	850 (1874)	
		Rear	990 (2183)	990 (2183)	
Max. towing gross weight	kg (lb)		1200 (2645)	1300 (2866)	
Max. nose weight	kg (lb)		84 (185)	65 (143)	
Seating capacity		Front	2	2	
		Rear	3	3	

WHEELS AND TYRES

Wheels and tyres / Model			Alfa 90	Alfa 90 Super	
Version			1.8 2.0 (▲) 2.0 iniezione 2.0 6V iniezione	2.5 iniezione (•)	
Rims			5½J x 14 (1)	5½J x 14 (2)	6J x 15
Tyres			185/70 R14 86H		195/60 R15 86H
Inflation pressure [kg/cm² (PSI)] (3)	N	A	1.8	1.9	
		P	1.8	2.0	
	C	A	1.8	2.0	
		P	2.2	2.3	

(▲) Only for Alfa 90 (•) It applies also to Alfa 90 Super 2.5 6V iniezione

Wheels and tyres / Model			Giulietta		
Version			1.6	1.8	2.0
Rims			5½J x 13 2H (4)		5½J x 14 2H (4)
			5½J x 13 CH (5)		5½J x 14 CH (5)
Tyres			165 SR 13	185/70 SR 13 (4)	175/70 SR 14 (8)
			185/70 SR 13 (6)		185/65 R 14
Inflation pressure [kg/cm² (PSI)] (3)	N	A	1.8		
		P	2.0		
	C	A	1.8		
		P	2.0		

Wheels and tyres / Model			Alfetta		
Version			1.6	1.8	2.0 2.0
Rims			5½J x 14 2H (4)		
			5½J x 14 CH (5)		
Tyres			165 SR 14 (7)		165 HR 14
			185/70 R 14 86 H (6)		185/70 R 14 86 H
inflation pressure [kg/cm² (PSI)] (3)	N	A	1.6		1.8
		P	1.8		1.8
	C	A	1.6		1.8
		P	1.8		2.2

Wheels and tyres / Model			GTV 2.0		GTV 6 2.5
Rims			5½J x 14	6J x 15	6J x 15
Tyres			185/70 R14 86H	195/60 R15 86H	195/60 R15 86H
Inflation pressure [kg/cm² (PSI)] (3)	N	A	1.7	2.0	2.0
		P	1.8	2.0	2.0
	C	A	1.7	2.0	2.2
		P	1.8	2.0	2.5

WHEELS AND TYRES

Wheels and tyres / Model			Alfa 75			
Version			1.6	1.8	2.0	6V iniezione
Rims			5½J x 13 (1)	5½J x 13 (1)	5½J x 14 (1)	5½J x 14 (2)
Tyres			185/70 R13 84T	185/70 R13 84H	185/65 R14 85H	195/60 R14V
Inflation pressure [kg/cm² (PSI)] (3)	N	A	1.8 (26)	1.8 (26)	1.8 (26)	2.0 (28)
		P	2.0 (28)	2.0 (28)	2.0 (28)	2.0 (28)
	C	A	2.0 (28)	2.0 (28)	2.0 (28)	2.2 (31)
		P	2.2 (31)	2.2 (31)	2.2 (31)	2.2 (31)

Wheels and tyres / Model			Alfa 75	
Version			1.8 turbo	
Rims			6½J x 14 (2)	
Tyres			195/60 R14V	
Inflation pressure [kg/cm² (PSI)] (3)	N	A	2.0 (28)	
		P	2.0 (28)	
	C	A	2.2 (31)	
		P	2.5 (36)	

Wheels and tyres / Model			75 1.6	75 1.8	75 2.0	75 Twin Spark 2.0
Rims			5½J x 13 (1)	5½J x 13 (1)	5½J x 14 (1)	5½J x 14 (1) 6½J x 14 (2)
Tyres			185/70 R13 84T	185/70 R13 84H	185/65 R14 85H	195/60 VR 14
Inflation pressure [kg/cm² (PSI)] (3)	N	A	1.8 (26)	1.8 (26)	1.8 (26)	2.0 (28)
		P	2.0 (28)	2.0 (28)	2.0 (28)	2.0 (28)
	C	A	2.0 (28)	2.0 (28)	2.0 (28)	2.2 (31)
		P	2.2 (31)	2.2 (31)	2.2 (31)	2.2 (31)

Wheels and tyres / Model			75 i.e. TURBO	75 6V 2.5	75 6V 3.0	
Rims			5½J x 14 (1) 6½J x 14 (2)	6½J x 14 (2)	6½J x 14 (2)	
Tyres			195/60 VR 14	195/60 VR 14	195/60 VR 14	
Inflation pressure [kg/cm² (PSI)] (3)	N	A	2.0 (28)	2.0 (28)	2.0 (28)	
		P	2.0 (28)	2.0 (28)	2.0 (28)	
	C	A	2.2 (31)	2.2 (31)	2.2 (31)	
		P	2.5 (36)	2.5 (36)	2.5 (36)	

A: Front
P: Rear
N: Light load, normal speed
C: Fully laden, high speed

T: Up to 190 km/h (188 mph)
H: Up to 210 km/h (130 mph)
V: Up to 230 km/h (143 mph)

(1) 4 wheel nut rim
(2) 5 wheel nut rim
(3) Pressure with cold tyres
(4) Pressed steel rims
(5) Alloy rims
(6) Tyre supplied upon request
(7) For the German version tyres of HR type
(8) Snow tyres

NOTE:
Tighten wheel nuts to 98 Nm (10 kgm) (72.3 ft.lb)

IDENTIFICATION DATA

(Except Switzerland, Sweden, Australia)

Model				Alfa 90								
Version				1.8		2.0		2.0 Iniezione		2.5 Iniezione		2.0 6V Iniezione
Body				4 — door saloon								
Drive				Left	Right	Left	Right	Left	Right	Left	Right	Left
Identification No.		Label type and location	— on identification label	162.02	—	162.12	—	162.14	162.15	162.18	162.19	162.10
Chassis No.	Type approval No.	Label type and location	— on identification label	162.A1 (1) 162.A1A (2)		162.A2 (1) 162.A2C (2)		162.A2A (1) 162.A2E (2)		162.A		162.A2B (1) 162.A2D (2)
Chassis No.	Type approval No.	Label type and location	— on the right rear side of luggage compartment floor	162.A10		162.A20		162.A20		162.A00		162.A20
Chassis No.	Serial No.	Label type and location	— on the right rear side of luggage compartment floor	from 00.001.011		from 00.050.011		from 00.001.011	from 03.001.011	from 00.001.011	from 03.001.011	from 00.001.011
Engine No.	Type and serial No.	Label type and location	— on the left rear side of cylinder block	062.02 from 000.001		062.12 from 000.001		017.13 from 017.899		016.46 from 000.001		062.10 from 000.001

(1) Hight-geared gearbox version
(2) Low-geared gearbox version

(Except Switzerland, Sweden, Australia)

Model				Alfa 75							
Version				1.6		1.8		2.0		6V iniezione	
Body				4 — door saloon							
Drive				Left	Right	Left	Right	Left	Right	Left	Right
Identification No.		Label type and location	— on identification label	161.00	161.01	161.02	162.03	161.08	161.09	161.180	161.190
Chassis No.	Type approval No.		— on identification label	162.B2 (1) 162.B2A (2)		162.B1 (1) 162.B1A (2)		162.BA (1) 162.BF (2)		162.B3 (1) 162.B3A (2)	
			— on the right rear side of luggage compartment floor	162.B20		162.B10		162.B00		162.B30	
	Serial No.		— on the right rear side of luggage compartment floor	from 00.001.011	from 03.001.011	from 00.001.011	from 03.001.011	from 00.200.011	from 03.010.011	from 00.001.011	from 03.001.011
Engine No.	Type and serial No.		— on the left rear side of cylinder block	061.00 from 000.001		062.02 from 000.001		062.12 from 000.001		016.46 from 000.001	

(1) High-geared gearbox version
(2) Low-geared gearbox version

(Except Switzerland)

Model				Alfa 75	
Version				1.8 turbo	
Body				4 — door saloon	
Drive				Left	Right
Identification No.		Label type and location	— on identification label	161.340	161.350
Chassis No.	Type approval No.		— on identification label	162.B1C	
			— on the right rear side of luggage compartment floor	162.B10	
	Serial No.		— on the right rear side of luggage compartment floor	from 00.050.011	
Engine No.	Type and serial No.		— on the left side of cylinder block	061.34 from 000.001	

(Except Switzerland, Sweden, Australia)

Model				Alfa 90 Super						
Version				1.8		2.0 Iniezione		2.5 6V Iniezione		2.0 6V Iniezione
Body				4 — door saloon						
Drive				Left	Right	Left	Right	Left	Right	Left
Identification No.		Label type and location	— on identification label	162.02.1	—	162.14.1	162.15.1	162.18.1	162.19.2	162.10.1
Chassis No.	Type approval No.		— on identification label	162.A1A		162.A2E		162.AA		162.A2D
			— on the right rear side of luggage compartment floor	162.A10		162.A20		162.A00		162.A20
	Serial No.		— on the right rear side of luggage compartment floor	from 00.006.511		from 00.017.511		from 00.007.011	from 03.002.011	from 00.105.011
Engine No.	Type and serial No.		— on the left rear side of cylinder block	062.02 from 000.001		017.13 from 017.899		016.46 from 000.001		062.10 from 000.001

(Except Switzerland, Sweden, Australia)

Model				1.8		1.8		2.0		Twin Spark 2.0	
Body				4 — door saloon							
Drive				L	R	L	R	L	R	L	R
Identification No.		Label type and location	— on identification label	161.000	161.010	161.020	162.030	161.080	161.090	161.220	161.230
Chassis No.	Type approval No.	Label type and location	— on identification label	162.B2 (1) 162.B2A (2)		162.B1 (1) 162.B1A (2)		162.BA (1) 162.BF (2)		162.B4	
Chassis No.	Type approval No.	Label type and location	— on the right rear side of luggage compartment floor	162.B20		162.B10		162.B00		162.B40	
Chassis No.	Serial No.	Label type and location	— on the right rear side of luggage compartment floor	from 00.001.011	from 03.001.011	from 00.001.011	from 03.001.011	from 00.200.011	from 03.010.011	from 00.001.001	from 03.001.001
Engine No.	Type and serial No.	Label type and location	— on the left rear side of cylinder block	061.00 from 000.001		062.02 from 000.001		062.12 from 000.001		062.24 from 000.001	

Model				75 i.e. TURBO		SV 2.5		SV.3.0		
Body				4 — door saloon						
Drive				L	R	L	R	L	R	
Identification No.		Label type and location	— on identification label	161.440		161.181	161.191	161.200	161.210	
Chassis No.	Type approval No.	Label type and location	— on identification label	162.B1C		162.B3		162.B6		
Chassis No.	Type approval No.	Label type and location	— on the right rear side of luggage compartment floor	162.B10		162.B30		162.B60		
Chassis No.	Serial No.	Label type and location	— on the right rear side of luggage compartment floor	from 00.055.011		from	from	from 00.001.001	from 03.001.001	
Engine No.	Type and serial No.	Label type and location	— on the left rear side of cylinder block	061.34 from 000.001		016.46 from 000.001		061.20 from 000.001		

(1) High-geared gearbox version
(2) Low-geared gearbox version

(Except Switzerland, Sweden, Australia)

Model				Giulietta					
Version				1.6 Vers. '83		1.8 Vers. '83		2.0 Vers. '83	
Body				4 - door saloon					
Drive				Left	Right	Left	Right	Left	Right
Identification No.		Label type and location	– on identification label	113.48	113.49	113.50	113.51	113.56	113.57
Chassis No.	Type approval No.		– on identification label	116.50 B		116.AA		116.A 1A	
			– on scuttle	116.50.0		116.A.00		116.A.10	
	Serial No.		– on scuttle	from 00.170.001	from 03.008.01	from 00.065.001	from 03.007.501	from 00.025.001	from 03.003.001
Engine No.	Type and serial No.		– on LH rear of cylinder block	016.00 from 257.001		016.78 from 000.001		016.55 from 000.001	

(Except Switzerland, Sweden, Australia)

Model				Alfetta								GTV 2.0	
Version				1.6 Vers. '83		1.8 Vers. '83		2.0 Vers. '83		2.0 Vers. '83		Vers. '83	
Body				4 - door saloon								2 - door coupé	
Drive				Left	Right	Left	Right	Left	Right	Left	Right	Left	Right
Identification No.		Label type and location	– on identification label	117.18	–	117.17	–	117.01	–	117.13	117.14	113.17	113.18
Chassis No.	Type approval No.		– on identification label	116.B1A	–	116.B2	–	116.55F	–	116.55N	116.56N	116.36 C	116.37 C
			– on scuttle	116.B10	–	116.B20	–	116.550	–	116.550	116.560	116.36 O	116.37 O
	Serial No.		– on scuttle	from 00.008.011	–	from 00.008.011	–	from 00.177.011	–	from 00.150.011	from 03.012.011	from 00.062.501	from 03.017.501
Engine No.	Type and serial No.		– on LH rear of cylinder block	016.00 from 257.001		016.78 from 000.001		016.55 from 000.001		017.13 from 000.001		016.55 from 000.001	

(Except Switzerland, Sweden, Australia)

Model				GTV 6 2.5	
Edition				1985	
Body				2 - door coupè	
Drive				Left	Right
Identification No.		Label type and location	— on identification label	113.15	113.16
Chassis No.	Type approval No.		— on identification label	116.CA	116.CA
			— on scuttle	116.C00	116.C00
	Serial No.		— on scuttle	from 00.012.001	from 03.003.001
Engine No.	Type and serial No.		— on left rear of cylinder block	016.46 from 000.001	

(For Switzerland, Sweden, Australia)

Model				Alfa 90					
Version				2.0		2.0 Iniezione		2.5 Iniezione	
Body				4 - door saloon					
Drive				Left	Right	Left	Right	Left	Right
Version				Switzerland 1985 Sweden 1985	–	Switzerland 1985 Sweden 1985	–	Switzerland 1985 Sweden 1985	Australia 1985
Identification No.		Label type and location	– on identification label	162.12	–	162.14	–	162.18	162.19
Chassis No.	Type approval No.		– on identification label	162.A2C		162.A2E		162.A	
			– on the right rear side of luggage *compartment floor*	162.A20		162.A20		162.A00	
	Serial No.		– on the right rear *side of luggage* compartment floor	from 00.050.011		from 00.001.011		from 00.001.011	from 03.001.011
Engine No.	Type and serial No.		– on LH rear of cylinder block	062.12 from 000.001		017.13 from 017.899		016.46 from 000.001	

COMPLETE CAR

(Switzerland, Sweden, Australia)

Model				Giulietta							
Version				1.8 L		1.8		2.0 L		2.0	
Body				4 - door saloon							
Drive				Left	Right	Left	Right	Left	Right	Left	Right
Version				Switzerland 1983 Sweden 1983	Australia 1983	Switzerland 1984	–	Switzerland 1983 Sweden 1983	Australia 1983	Switzerland 1984 Sweden 1984	Australia 1984
Identification No.		Label type and location	– on identification label	116.95.1	116.96.1	113.50	–	116.97.1	116.98.1	113.56	113.57
Chassis No.	Type approval No.		– on identification label	116.AB	116.AB	116.AB	–	116.A1A	–	116.A1A	116.A1A
			– on scuttle	116.A	116.A00	116.A00	–	116.A10	116.A10	116.A10	116.A10
	Serial No.		– on scuttle	from 00.040.001	from 03.006.001	from 00.065.001	–	from 00.015.001	from 03.002.001	from 00.025.001	from 03.003.001
Engine No.	Type and serial No.		– on LH rear of cylinder block	016.78 from 000.001		016.78 from 000.001		016.55 from 000.001		016.55 from 000.001	

(For Switzerland)

Model				Alfa 75	
Version				1.8 turbo	
Body				4 — door saloon	
Drive				Left	Right
Version				Switzerland 1986	—
Identification No.		Label type and location	— on identification label	161.340	—
Chassis No.	Type approval No.		— on identification label	162.B1C	
			— on scuttle	162.B10	
	Serial No.		— on scuttle	from 00.050.011	
Engine No.	Type and serial No.		— on the left rear side of cylinder block	061.34 from 000.001	

(For Switzerland, Sweden, Australia)

Model				Alfa 90 Super			
Version				2.0 iniezione		2.5 6V iniezione	
Body				4 — door saloon			
Drive				Left	Right	Left	Right
Version				Switzerland 1986 Sweden 1986	—	Switzerland 1986 Sweden 1986	Australia 1986
Identification No.		Label type and location	— on identification label	162.14.2	—	162.18.1	(1)
Chassis No.	Type approval No.	Label type and location	— on identification label	162.A2E		162.AA	(1)
			— on the right rear side of luggage compartment floor	162.A20		162.A00	
	Serial No.		— on the right rear side of luggage compartment floor	from 00.017.511		from 00.007.011	from 03.002.011
Engine No.	Type and serial No.		— on LH rear of cylinder block	017.13 from 017.889		016.46 from 000.001	019.11 from A60.001

(1) Number written by the Subsidiary

(For Switzerland, Sweden, Australia)

Model				GTV 6 2.5	
Body				2 - door coupè	
Drive				Left	Right
Edition				Switzerland 1985 Sweden 1985	Australia 1985
Identification No.		Label type and location	— on identification label	113.15	113.16
Chassis No.	Type approval No.		— on identification label	116.CA	116.CA
			— on scuttle	116.C00	116.C00
	Serial No.		— on scuttle	from 00.012.001	from 03.003.001
Engine No.	Type and serial No.		— on left rear of cylinder block	016.46 from 000.001	

COMPLETE CAR

(Switzerland, Sweden, Australia)

Model				Alfetta						GTV	
Version				1.8		2.0		2.0 ●		2.0	
Body				4 - door saloon						2 - door coupé	
Drive				Left	Right	Left	Right	Left	Right	Left	Right
Version				Switzerland 1984	–	Switzerland 1984 Sweden 1984	Australia 1983	Switzerland 1984	–	Switzerland 1983 Sweden 1983	Australia 1983
Identification No.		Label type and location	– on identification label	117.17	–	117.01	117.10	117.13	–	113.17	113.18
Chassis No.	Type approval No.	Label type and location	– on identification label	116.B2A	–	116.55 G	116.56 H	116.55 N	–	116.36 C	116.37 C
Chassis No.	Type approval No.	Label type and location	– on scuttle	116.B2O	–	116.55 O	116.56 O	116.55 O	–	116.36 O	116.36 O
Chassis No.	Serial No.	Label type and location	– on scuttle	from 00.008.001	–	from 00.170.001	from 03.020.011	from 00.150.001	–	from 00.062.501	from 03.017.501
Engine No.	Type and serial No.	Label type and location	– on LH rear of cylinder block	016.78 from 000.001	–	016.55 from 000.001		017.13 from 000.001	–	016.55 from 000.001	

DATA PLATES

DATA PLATES POSITION

Alfa 90

- 1.8
- 2.0
- 2.0 iniezione

Alfa 90 Super

- 1.8
- 2.0 iniezione

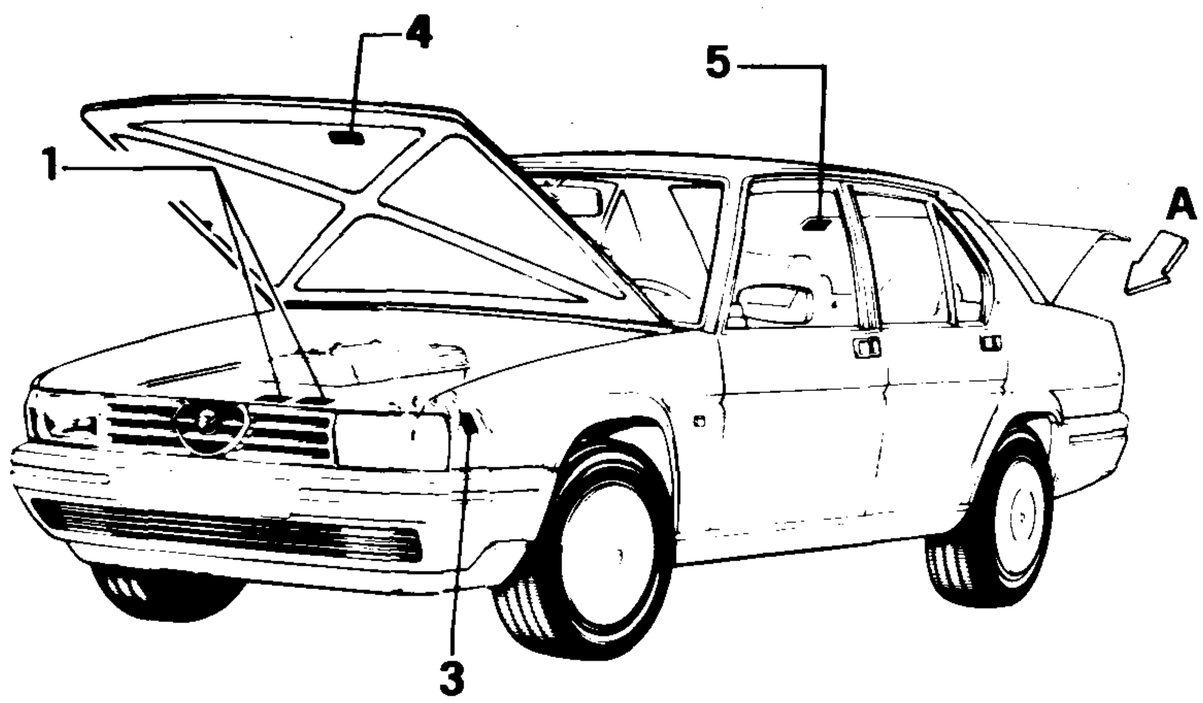

Alfa 90

- 2.5 iniezione
- 2.0 6V iniezione

Alfa 90 Super

- 2.5 6V iniezione
- 2.0 6V iniezione

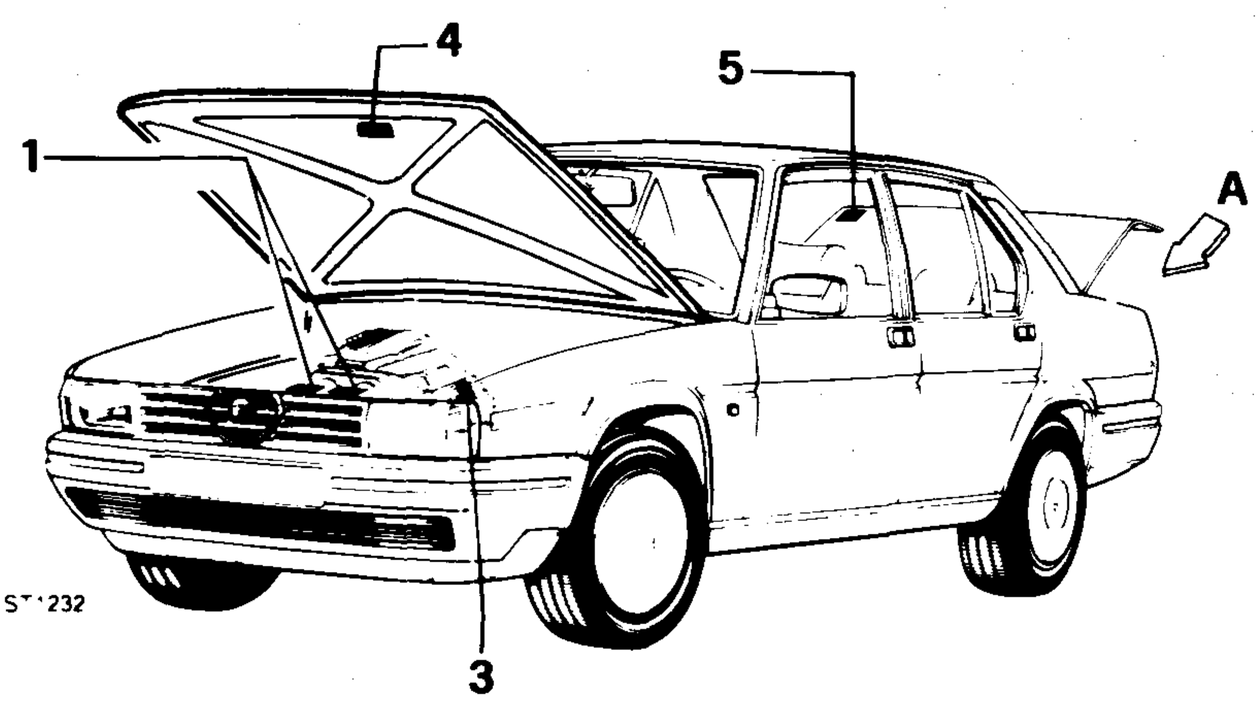

View from A

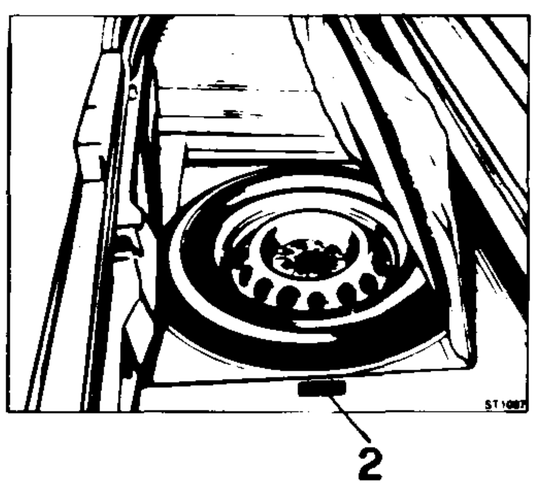

1. Identification and type approval labels
2. Luggage compartment floor labels
   (Type approval No. and serial No.)
3. Label on cylinder block left rear side
   (Engine No.)
4. Lubrication data label
   (Lubrication data)
5. Paint label

(Except Switzerland, Sweden and Australia)

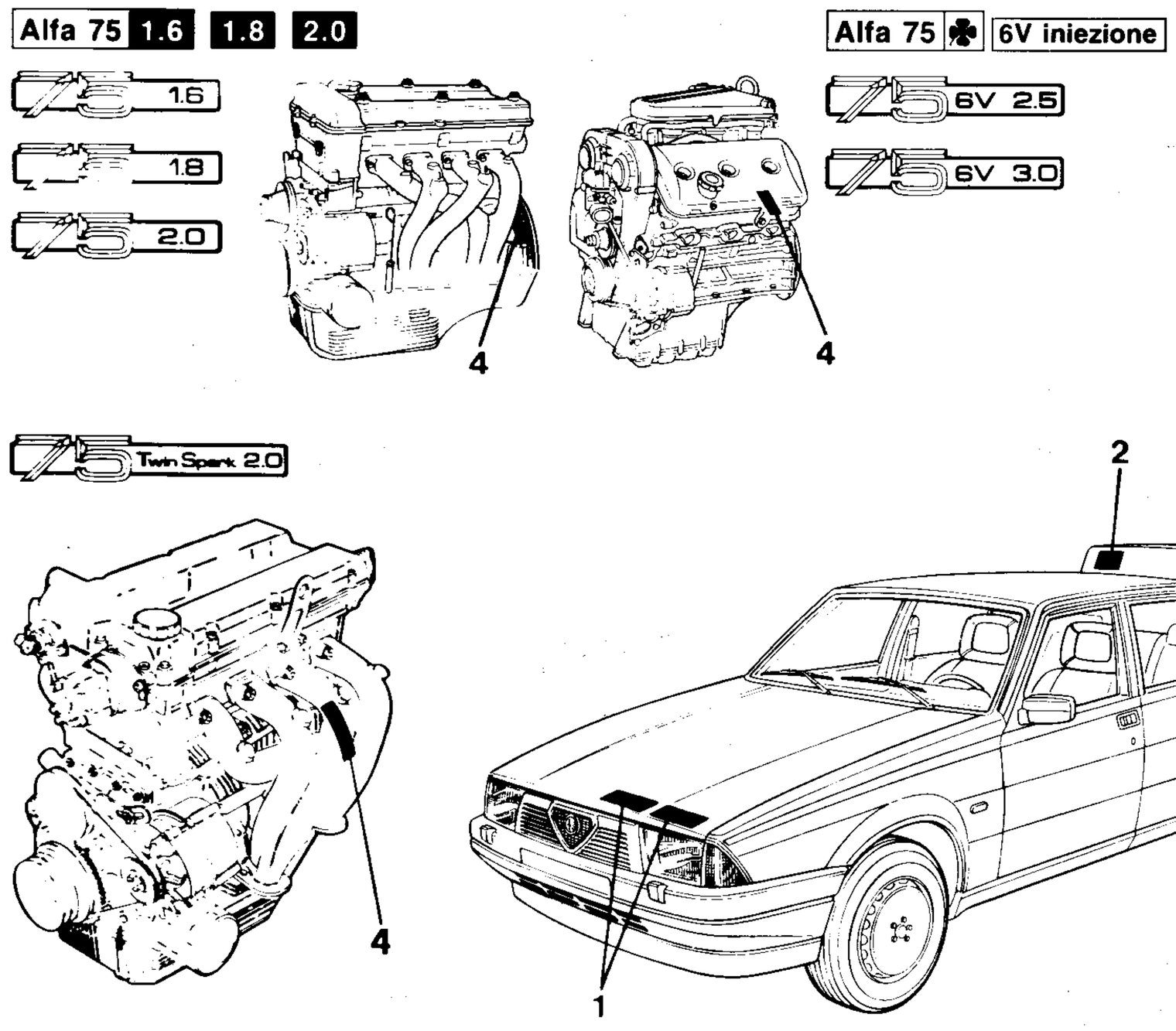

(For Switzerland, Sweden and Australia)

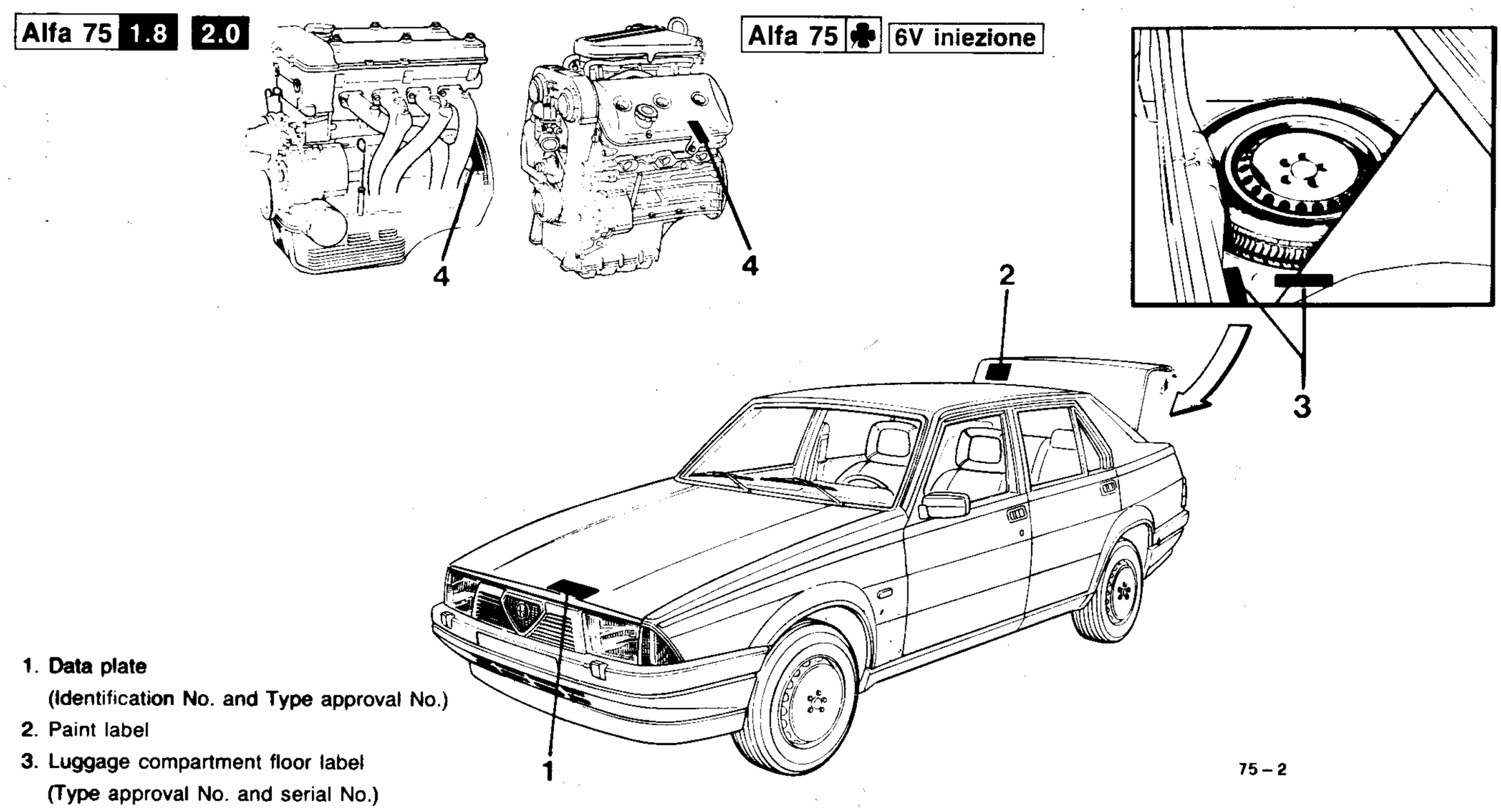

1. **Data plate**
   (Identification No. and Type approval No.)
2. Paint label
3. Luggage compartment floor label
   (Type approval No. and serial No.)
4. Label on cylinder block left rear side
   (Engine No.)

(Except Switzerland)

Alfa 75 1.8 turbo 75 i.e. TURBO

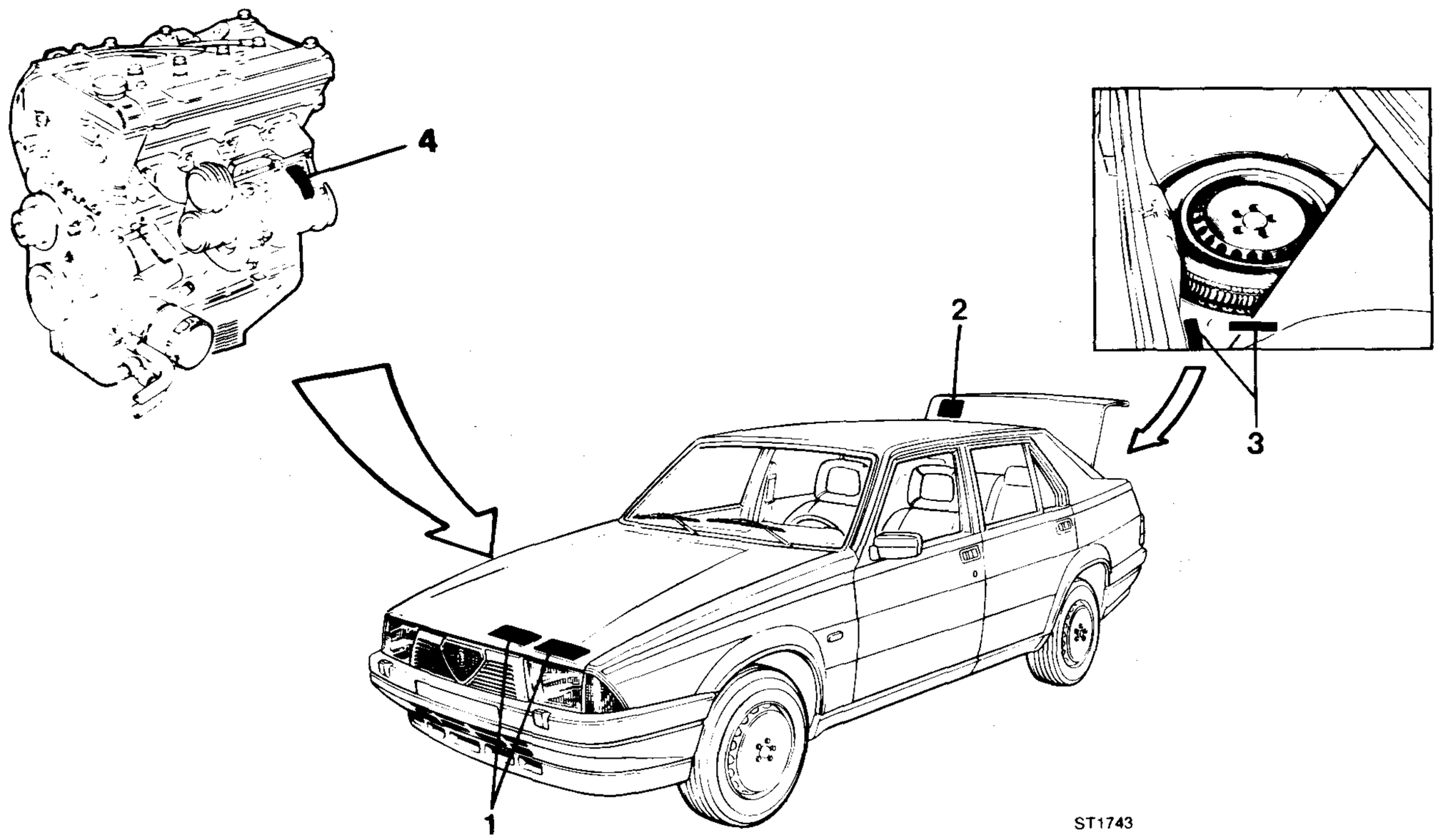

(For Switzerland)

Alfa 75 1.8 turbo

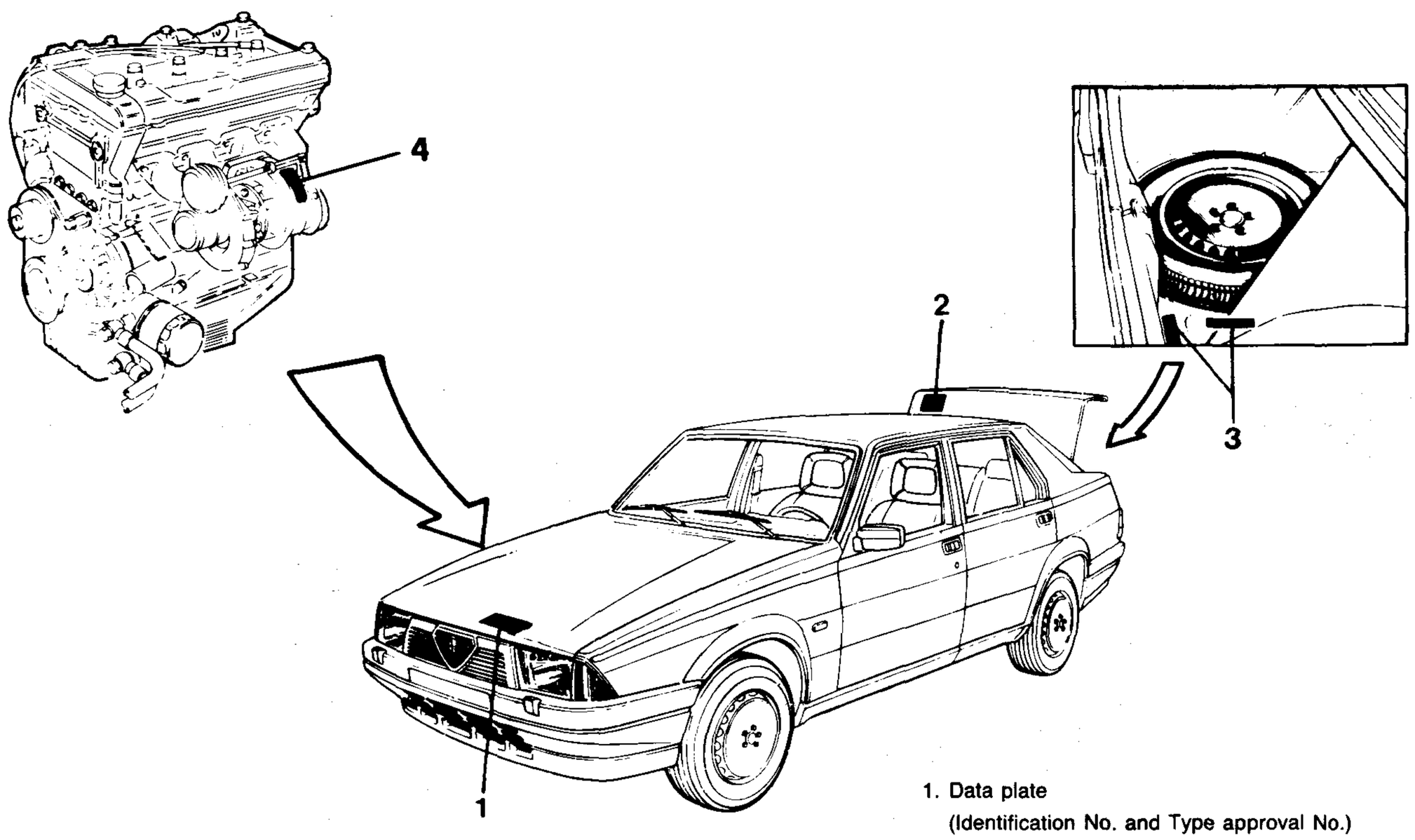

1. Data plate
   (Identification No. and Type approval No.)
2. Paint label
3. Luggage compartment floor label
   (Type approval No. and serial No.)
4. Label on cylinder block left rear side
   (Engine No.)

(Except Switzerland, Sweden, Australia)

Giulietta

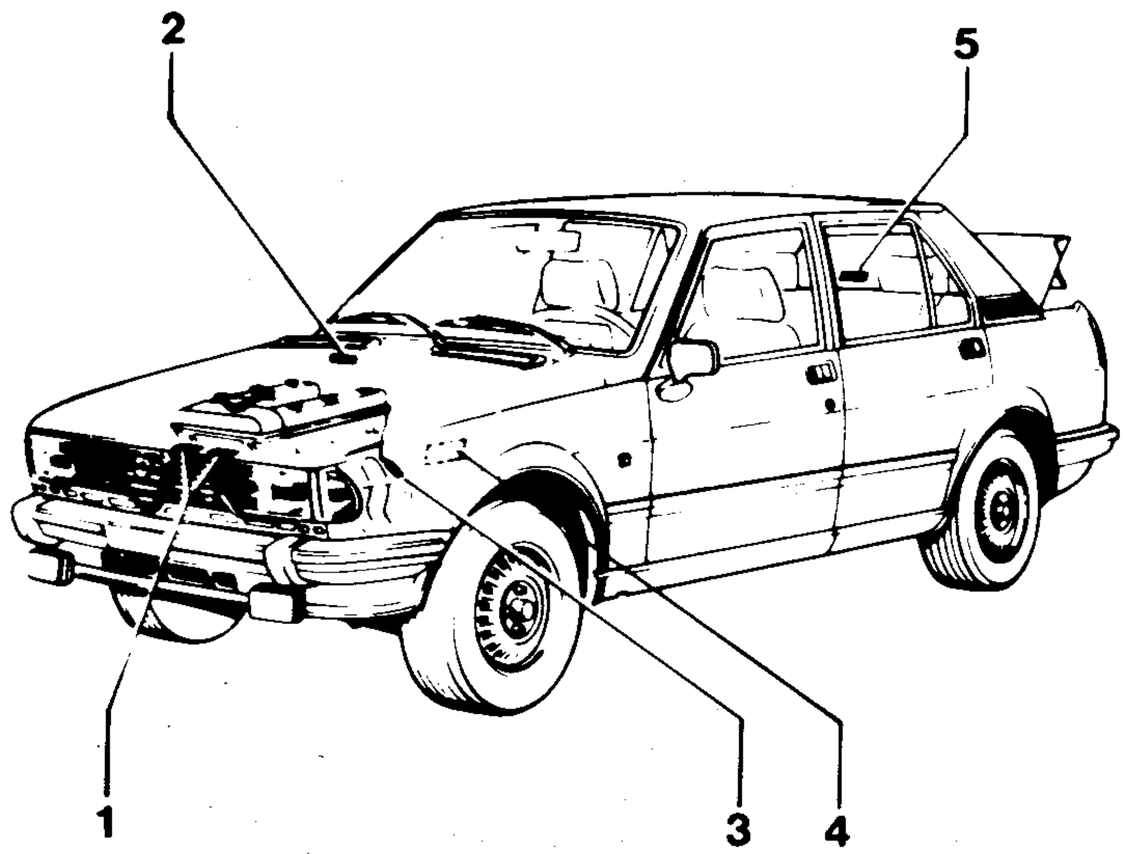

1 Identification label
(Identification No. and Type approval No.)
2 Label on scuttle
(Type approval No. and serial No.)
3 Label on cylinder block LH rear side
(Engine No.)
4 Lubrication data label
(Lubrication data
5 Paint label

Alfetta

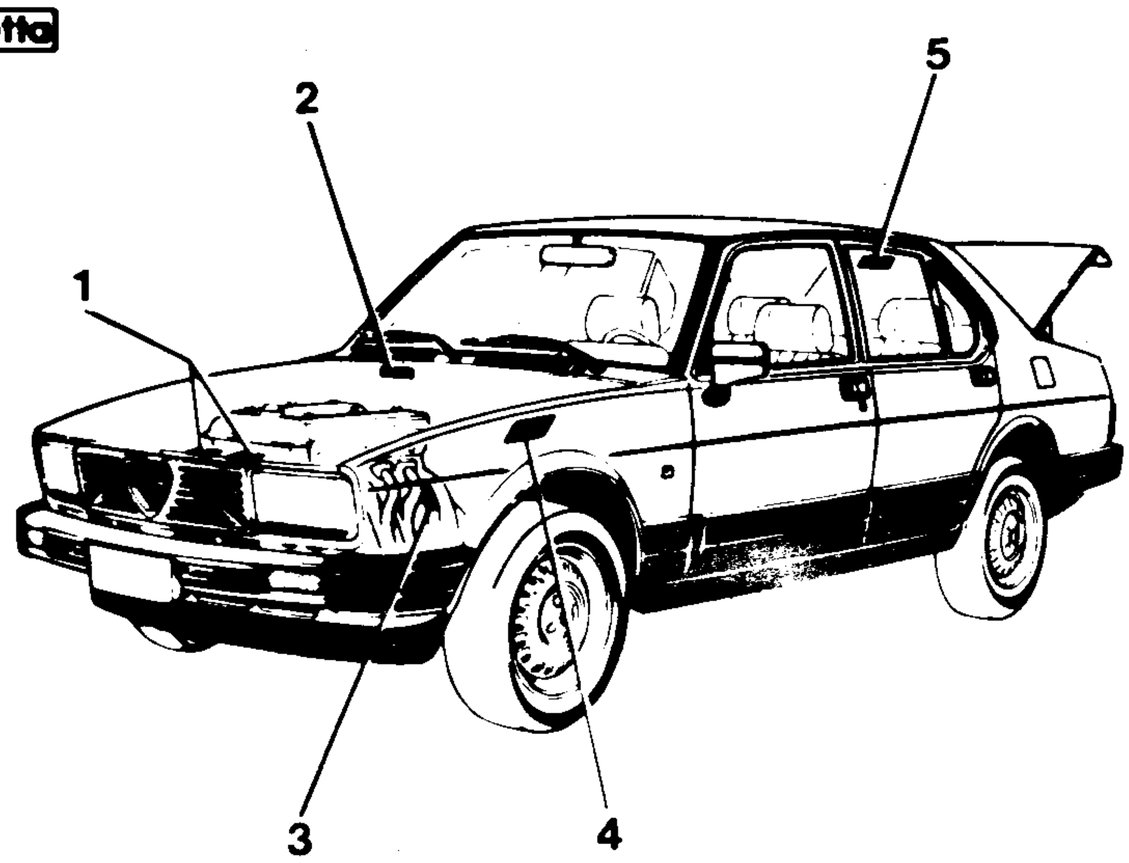

1 Identification label
(Identification No. and Type approval No.)
2 Label on scuttle
(Type approval No. and serial No.)
3 Label on cylinder block LH rear side
(Engine No.)
4 Lubrication data label
(Lubrication data)
5 Paint label

GTV 2.0

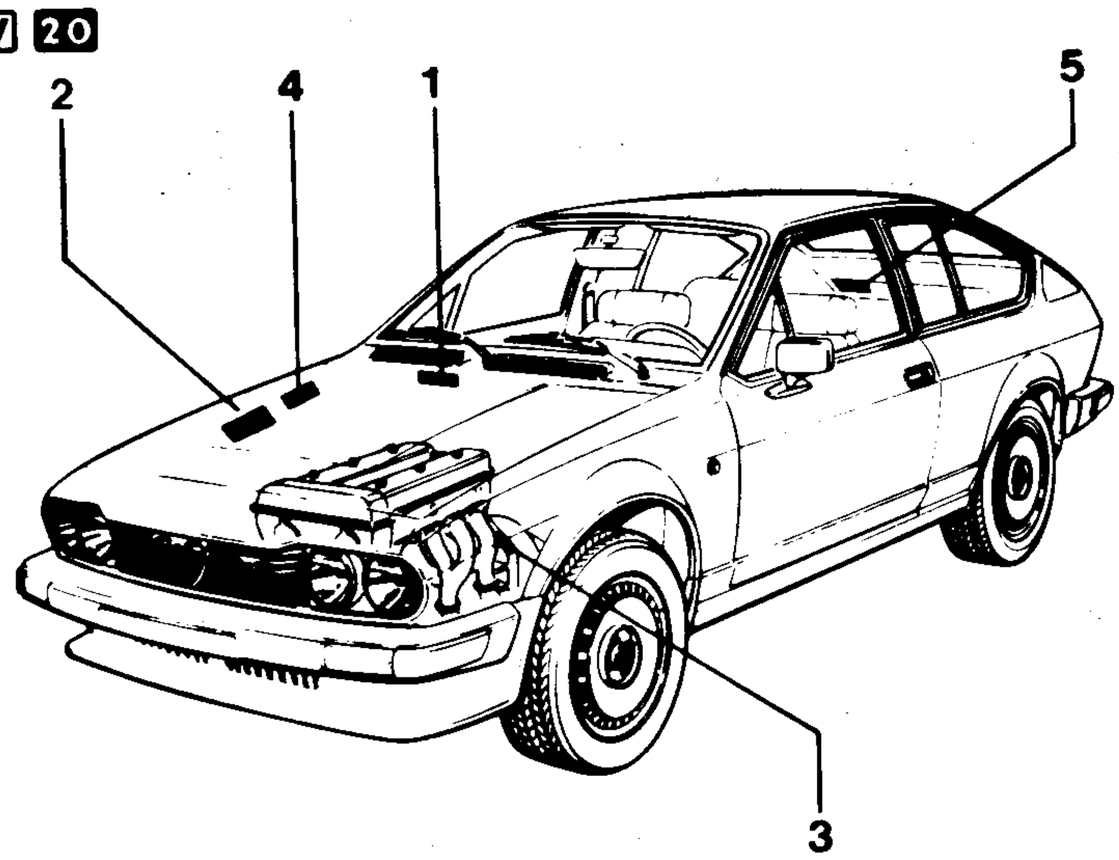

1 Label on scuttle
(Type approval No. and serial No.)
2 Identification label
(Identification No. and Type approval No.)
3 Label on cylinder block LH rear side
(Engine No.)
4 Lubrication data label
(Lubrication data)
5 Paint label)

(Switzerland, Sweden, Australia)

Giulietta

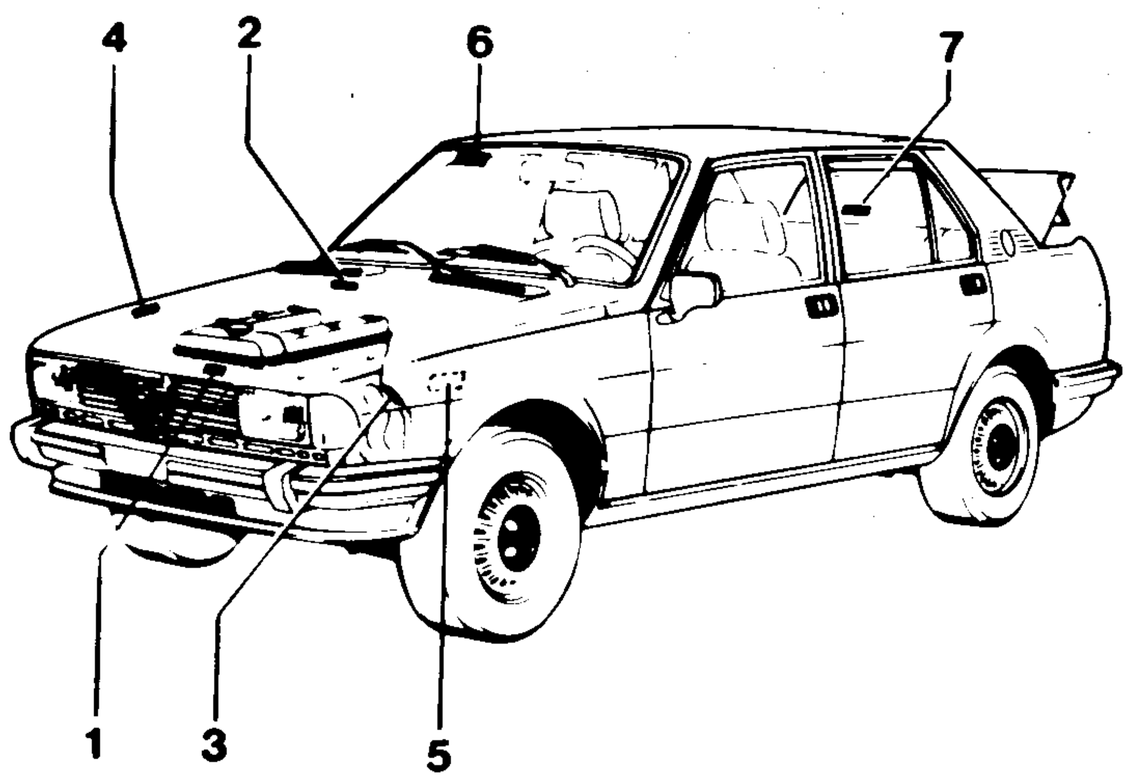

1 Identification label
(Identification No. and Type approval No.)
2 Label on scuttle
(Type approval No. and serial No.)
3 Label on cylinder block LH rear side
(Engine No.)
4 Engine and exhaust emissions regulations
5 Lubrication data label
(Lubrication data)
6 Plate affixed to passenger side sun visor
(Running in instructions)
7 Paint label

Alfetta

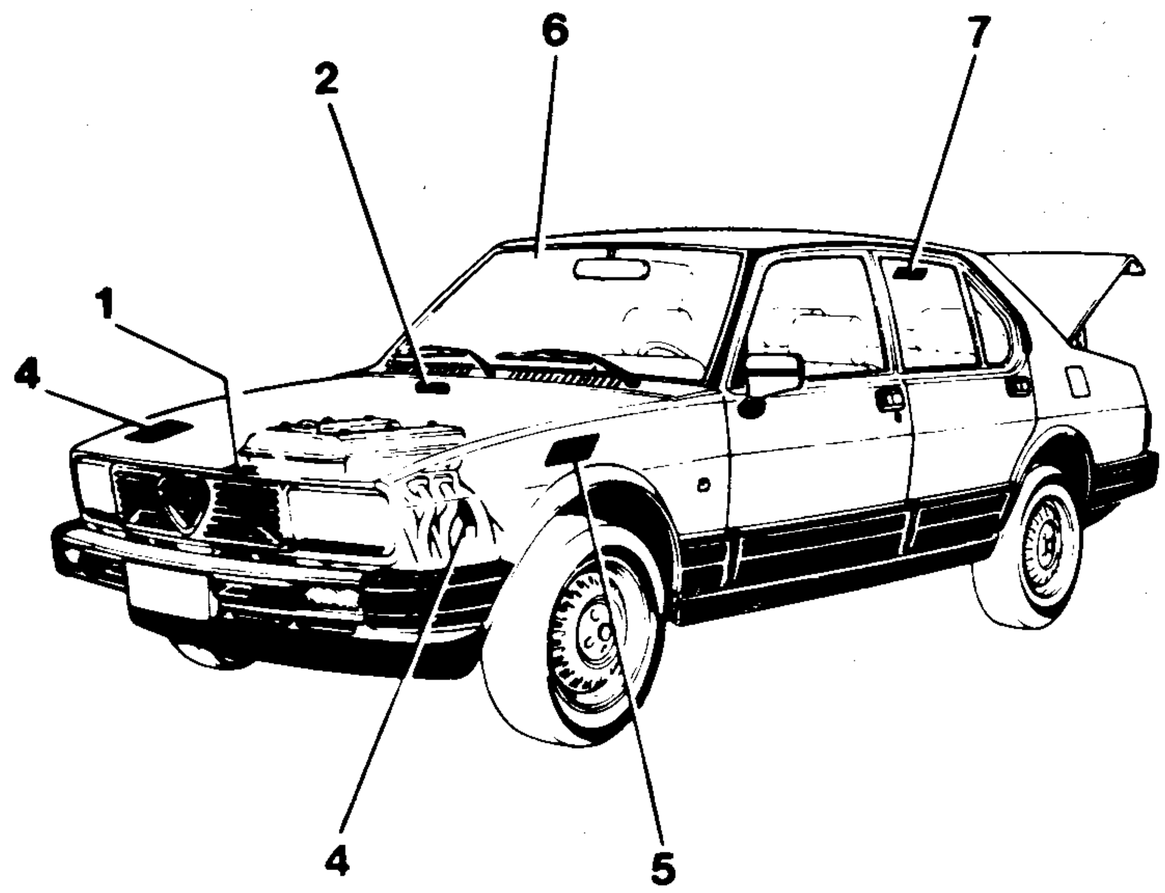

1 Identification label
(Identification No. and Type approval No.)
2 Label on scuttle
(Type approval No. and serial No.)
3 Label on cylinder block LH rear side
(Engine No.)
4 Engine and exhaust emissions regulations
5 Lubrication data label
(Lubrication data)
6 Plate affixed to passenger side sun visor
(Running in instructions)
7 Paint label

GTV 20

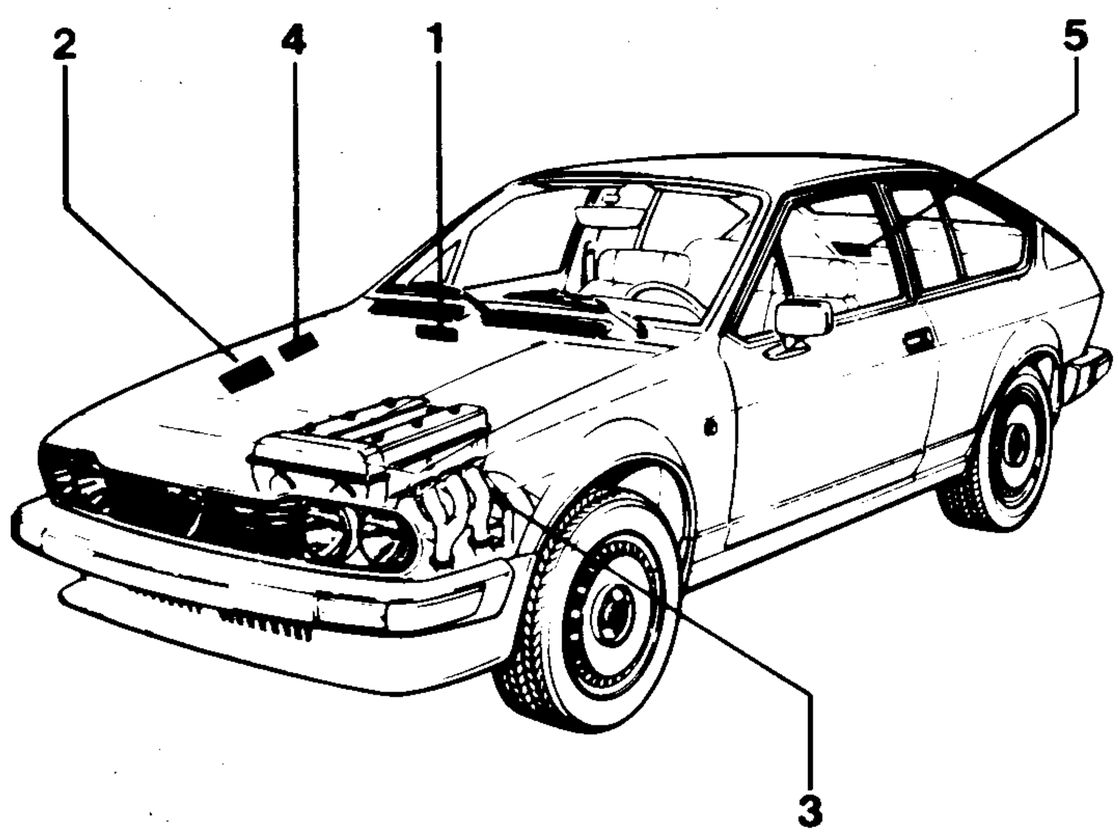

1 Label on scuttle
(Type approval No. and serial No.)
2 Identification label
(Identification No. and Type approval No.)
3 Label on cylinder block LH rear side
(Engine No.)
4 Lubrication data label
(Lubrication data)
5 Paint label

(Except Switzerland, Sweden, Australia)

GTV 6 2.5

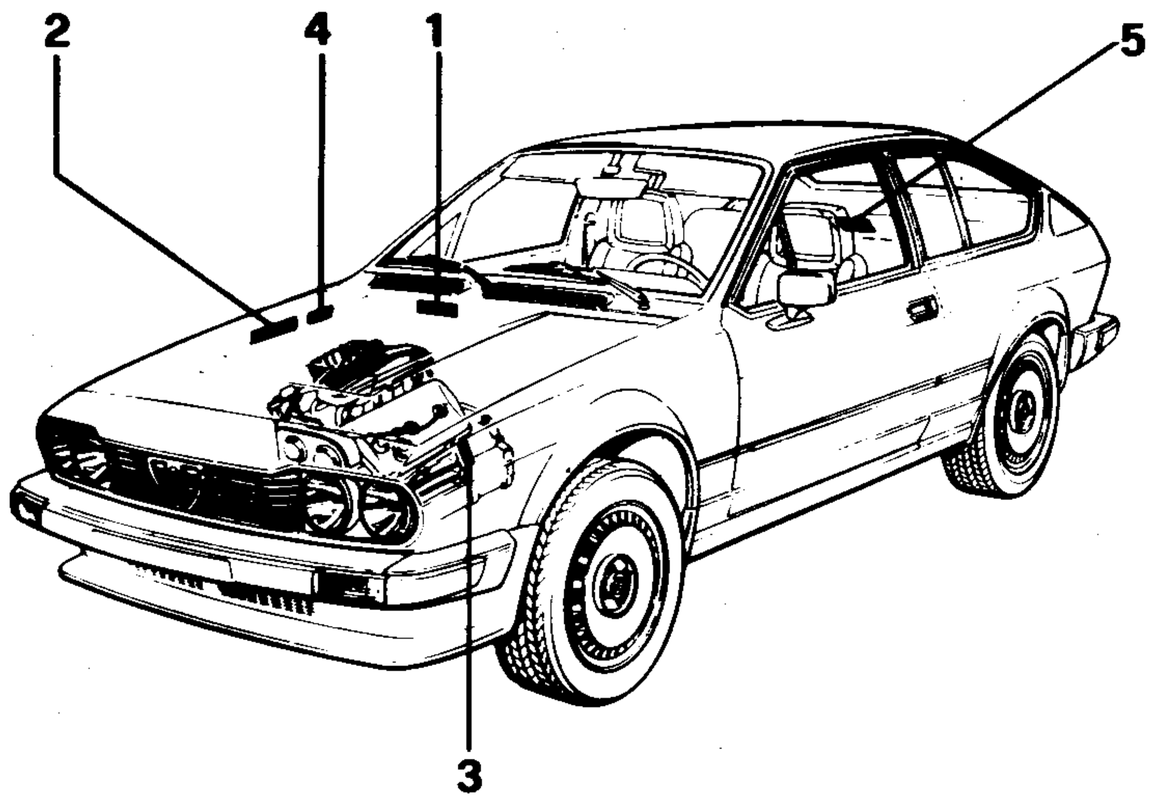

1. Stamped on dash panel
   (Type approval number and chassis serial number)
2. Identification label
   (Type number, type approval number and vehicle weights)
3. Stamped on block, LH rear
   (Engine type and serial No.)
4. Lubrication data label
   (Lubrication data)
5. Paint label

(For Switzerland, Sweden, Australia)

GTV 6 2.5

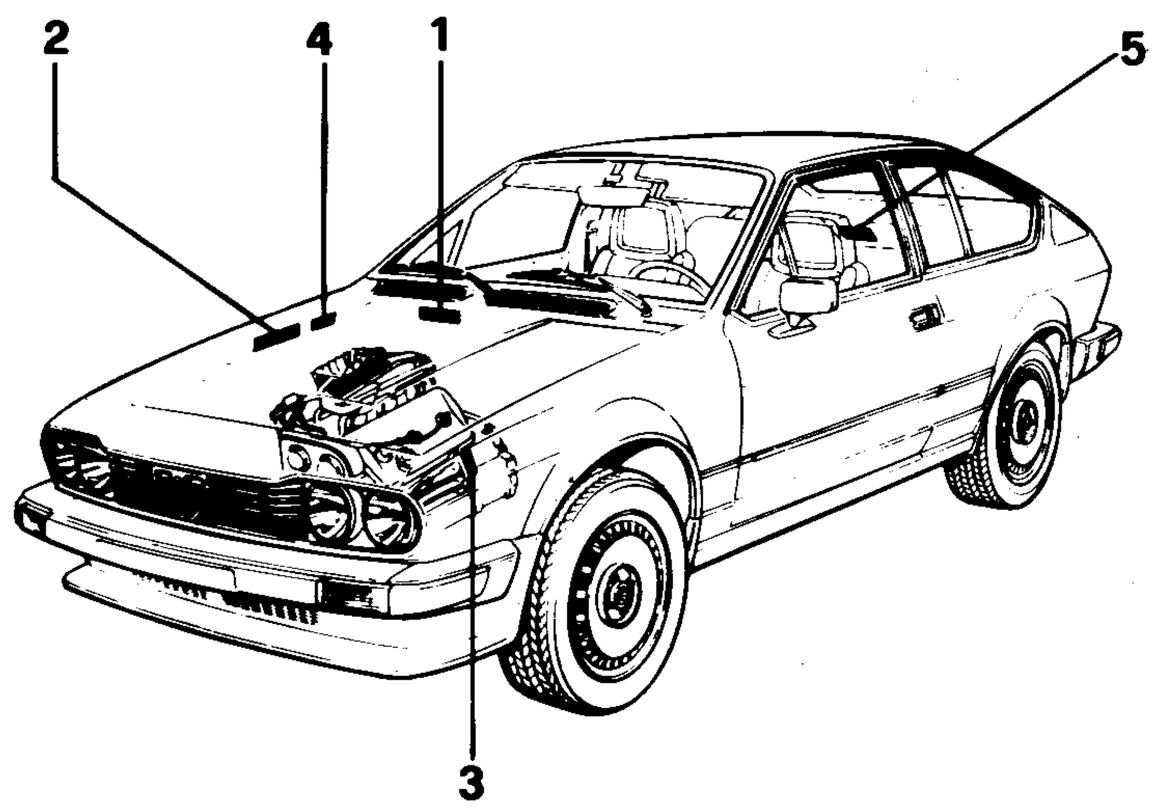

1. Stamped on dash panel
   (Type approval number and chassis serial number)
2. Identification label
   (Type number, type approval number and vehicle weights)
3. Stamped on block, LH rear
   (Engine type and serial No.)
4. Lubrication data label
   (Lubrication data)
5. Paint label

GROUP 01

CONTENTS

4 cylinders 1.6 1.8 2.0 iniezione (017.13) 1.8 turbo

ENGINE REMOVAL AND INSTALLATION 01-3
Foreword 01-3
Engine mount location 01-3
Engine removal Alfetta, Alfa 90, Alfa 75 and Giulietta vehicles 01-4
Engine installation Alfetta, Alfa 90, Alfa 75 and Giulietta vehicles 01-7
Engine removal Alfetta and Alfa 90 Motronic (017.13) vehicles 01-15
Engine installation Alfetta and Alfa 90 Motronic (017.13) vehicles 01-16
Engine removal GTV 2.0 vehicle 01-19
Engine installation GTV 2.0 vehicle ... 01-20
ENGINE REMOVAL AND INSTALLATION (Alfa 75 turbo vehicle) 01-22/1
Foreword 01-22/1
Removal 01-22/2
Installation 01-22/5
ENGINE OVERHAUL 01-22/13
ENGINE DISASSEMBLY 01-23
External components 01-23
External components 01-24
Internal components 01-25
Motronic 2000 (017.13) engine 01-26
1.8 Turbo engine 01-26/1
Foreword 01-27
Subassembly removal 01-27
Cylinder head removal 01-28
Engine block component removal 01-29
Water pump removal 01-32
Intake manifold/collector box disassembly 01-33
Cylinder head disassembly 01-33
CHECKS AND INSPECTION 01-35
Cylinder heads and valves 01-35
Cylinder head sealing surface inspection 01-35
Tappets and tappet housing bores 01-36
Camshaft and camshaft journal housing bores 01-36
Valve seat insert replacement 01-36
Valve guides 01-37
Valves and valve seats 01-38
Valve springs 01-39
Engine block 01-39
Main and connecting rod bearings 01-39
Main bearing caps 01-39
Thrust rings 01-39
Camshaft idler gear bushing 01-40
Cylinder liner stand-out 01-40
Crankshaft 01-40
Clinder liners 01-41
Pistons and connecting rods 01-42
Cylinder liner, piston and connecting rod matching 01-43
Flywheel 01-44
ENGINE ASSEMBLY 01-44
Cylinder head assembly 01-44
Engine block assembly 01-46
Crankshaft 01-46
Cylinder liner, piston and connecting rod installation 01-48
Timing drive idler gear installation 01-49
Front cover assembly 01-49
Front cover installation 01-50
Cylinder head installation 01-51
Oil pan installation 01-53
Camshaft cover installation 01-53
Intake manifold/collector box assembly 01-53
Engine auxiliaries installation 01-53
Rear cover rubber bushing replacement 01-55
LUBRICATION SYSTEM 01-55
Description (1.6, 1.8, 2.0, 2.0 iniezione (017.13)) . 01-55
Description (1.8 Turbo) 01-56/1
Oil pressure check 01-56/4
Oil pump removal 01-56/4
Oil pump disassembly and assembly 01-56/4
Checks and inspection 01-56/4
Oil pump installation 01-57
Oil filter replacement 01-57

CONTENTS (Contd)

4 cylinders 1.6 1.8 2.0 2.0 iniezione (017.13) 1.8 turbo

SPECIFICATIONS AND GENERAL REQUIREMENTS 01-59
Engine specifications 01-59
Checks and adjustments 01-60
General requirements 01-74
Tightening torques 01-75
TROUBLESHOOTING 01-76
TURBOCHARGER TROUBLESHOOTING 01-76/1
SERVICE TOOLS 01-77

4 cylinders 2.0 iniezione (Twin Spark) (062.24)

ENGINE REMOVAL AND INSTALLATION
(75 Twin Spark 2.0) 01-22/12A
Foreword 01-22/12A
Location of engine support 01-22/12A
Removal 01-22/12B
Installation 01-22/12E
ENGINE OVERHAUL 01-58/1
ENGINE DISASSEMBLY 01-58/7
Preliminary operations 01-58/7
Cylinder head removal 01-58/8
Cylinder head disassembly on bench 01-58/8
Exhaust-side camshaft disassembly 01-58/11
Intake-side camshaft and timing variator disassembly 01-58/11
Engine block disassembly 01-58/12
Components removal 01-58/12
Main bearing caps and crankshaft removal 01-58/12
Water pump removal 01-58/12
CHECKS AND INSPECTION 01-58/13
Cylinder head and valves 01-58/13
Cylinder head sealing surface inspection 01-58/13
Tappets and tappet housing bores 01-58/13
Camshaft and camshaft journal housing bores 01-58/13
Valve seats replacement 01-58/14
Checking valve guides 01-58/15
Checking valves and valve seats .. 01-58/16
Checking valve springs 01-58/17
Timing variator 01-58/17
Engine block 01-58/17
ENGINE ASSEMBLY 01-58/19
Cylinder head assembly 01-58/19
Engine block assembly 01-58/23
Crankshaft 01-58/23
Cylinder liner, piston and connecting-rod installation 01-58/23
Timing drive idler gear installation . 01-58/23
Front cover assembly 01-58/23
Front cover installation 01-58/23
Pulley installation 01-58/23
Oil pan installation 01-58/24
Cylinder head installation 01-58/24
Preliminary operations 01-58/24
Cylinder head installation 01-58/24
Timing check 01-58/25
Timing cover installation 01-58/27
Engine fitting out 01-58/27
Components installation 01-58/27
Rear cover rubber bushing replacement 01-58/28

CONTENTS (Contd)

4 cylinders 2.0 iniezione (Twin Spark) (062.24)

LUBRICATION SYSTEM 01-58/29
Description 01-58/29
Oil pressure check 01-58/31
Oil pan removal 01-58/31
Oil pump disassembly and assembly 01-58/31
Checks and inspections 01-58/31
Oil pump installation 01-58/31
Oil filter replacement 01-58/31

SPECIFICATIONS AND GENERAL REQUIREMENTS 01-59
Specifications 01-59
Checks and adjustments 01-60
General requirements 01-74
Tightening torques 01-75
TROUBLESHOOTING 01-76/1
SERVICE TOOLS 01-77

6 cylinders Alfa 90 2.5 iniezione Alfa 90 Super 2.5 6V iniezione

6 cylinders Alfa 75 6V iniezione 75 6V 2.5 75 6V 3.0

6 cylinders Alfa 90 2.0 6V iniezione Alfa 90 Super 2.0 6V iniezione

6 cylinders GTV 6 2.5

REMOVAL AND INSTALLATION OF ENGINES (Alfa 90, Alfa 90 Super, Alfa 75 and 75 vehicles) 01-81
Foreword 01-81
Engine removal 01-85
Engine installation 01-87
REMOVAL AND INSTALLATION OF ENGINE (Alfa 90 - 2.0 iniezione vehicles) 01-88/1
Foreword 01-88/1
Engine removal Alfa 90, 6 cyl. 2.0 iniezione (062.10) 01-88/2
Engine installation Alfa 90, 6 cyl. 2.0 iniezione (062.10) 01-88/5
REMOVAL AND INSTALLATION OF ENGINE (GTV 6 - 2.5 vehicle) 01-88/7
General 01-88/7
Removal of engine 01-88/12
Installation of engine 01-88/14
ENGINE DISASSEMBLY 01-88/15
Preliminary operations 01-88/15
Removal of fuel system components (L-Jetronic) 01-88/18
Removal of fuel system components (CEM) 01-88/21
Removal of accessories 01-88/26
Removal of the cylinder heads 01-88/29
Removal of components from engine block 01-88/32
Disassembly of the cylinder heads on bench 01-88/38
CHECKS AND TESTING OF THE CYLINDER HEADS 01-88/45
Checks and testing of the cylinder head and valves 01-88/45
Checking cylinder head flatness ... 01-88/45
Checking cylinder head bushings 01-88/45
Checking valve seats 01-88/49
Checking valve guides 01-88/50
Checking the valves 01-88/51
Checking valve springs 01-88/52
Checking tappets and tappet seats 01-88/53
Checking rocker arms and rocker arm shaft 01-88/53
Checking camshaft and journal bearings 01-88/53
ASSEMBLY OF THE CYLINDER HEADS (ON BENCH) 01-88/55

CONTENTS (Contd)

6 cylinders Alfa 90 2.5 iniezione | Alfa 90 Super 2.5 6V iniezione

6 cylinders Alfa 75 6V iniezione | 75 6V 2.5 | 75 6V 3.0

6 cylinders Alfa 90 2.0 6V iniezione | Alfa 90 Super 2.0 6V iniezione

6 cylinders GTV 6 2.5

Installation of valves and rocker arm shaft 01-88/55
Installation of camshaft 01-88/57
Valve clearance adjustment 01-88/58
Installation of distributor and oil pump drive pulley 01-88/59
Installation of camshaft drive pulley 01-88/60
Installation of intake stub pipes (L-Jetronic) 01-88/60
Removal of cylinder head from the bench 01-88/60
CHECKING THE ENGINE BLOCK 01-88/61
Checking the engine block 01-88/61
Crankshaft 01-88/61
Main and connecting rod half-bearings 01-88/62
Main bearings and bearing caps .. 01-88/63
Thrust rings 01-88/63
Cylinder liners 01-88/63
Disassembly of connecting rod-piston assembly 01-88/64
Reassembly of connecting rod-piston assembly 01-88/67
Replacing the flywheel ring gear .. 01-88/68
Replacing oil sump cover 01-88/69
ASSEMBLY OF ENGINE BLOCK 01-88/71
Crankshaft 01-88/71
Main bearing caps 01-88/71
Oil seal rear 01-88/73
Engine flywheel 01-88/73
Cylinder liners, pistons and connecting rods 01-88/74
Front cover 01-88/76
Crankshaft front pulley 01-88/76
Oil pump 01-88/77
Reinstallation of cylinder heads 01-88/80
Reinstallation of the accessories 01-88/81
Installation of fuel system components 01-88/91
Final operations 01-88/91
Replacing the rear cover silentbloc 01-88/92
Lubrication system 01-88/93
SPECIFICATIONS AND GENERAL REQUIREMENTS 01-89
Engine specifications 01-89
Checks and adjustment 01-90
General requirements 01-102
Tightening torques 01-104
TROUBLESHOOTING 01-105
SERVICE TOOLS 01-107

CONTENTS (Contd)

6 cylinders Alfa 90 2.5 ♣ Iniezione

6 cylinders Alfa 75 2.5 ♣ 6V iniezione

6 cylinders Alfa 90 2.0 6V Iniezione

6 cylinders GTV 6 2.5

Installation of valves and rocker arm shaft 01-88/55
Installation of camshaft 01-88/57
Valve clearance adjustment 01-88/58
Installation of distributor and oil pump drive pulley 01-88/59
Installation of camshaft drive pulley 01-88/60
Installation of intake stub pipes (L-Jetronic) 01-88/60
Removal of cylinder head from the bench 01-88/60
CHECKING THE ENGINE BLOCK 01-88/61
Checking the engine block 01-88/61
Crankshaft 01-88/61
Main and connecting rod half-bearings 01-88/62
Main bearings and bearing caps .. 01-88/63
Thrust rings 01-88/63
Cylinder liners 01-88/63
Disassembly of connecting rod-piston assembly 01-88/64
Reassembly of connecting rod-piston assembly 01-88/67
Replacing the flywheel ring gear .. 01-88/68
Replacing oil sump cover 01-88/69
ASSEMBLY OF ENGINE BLOCK 01-88/71
Crankshaft 01-88/71
Main bearing caps 01-88/71
Oil seal rear 01-88/73
Engine flywheel 01-88/73
Cylinder liners, pistons and connecting rods 01-88/74
Front cover 01-88/76
Crankshaft front pulley 01-88/76
Oil pump 01-88/77
Reinstallation of cylinder heads 01-88/80
Reinstallation of the accessories 01-88/81
Installation of fuel system components 01-88/91
Final operations 01-88/91
Replacing the rear cover silentbloc 01-88/92
Lubrication system 01-88/93
SPECIFICATIONS AND GENERAL REQUIREMENTS 01-89
Engine specifications 01-89
Checks and adjustment 01-90
General requirements 01-102
Tightening torques 01-104
TROUBLESHOOTING 01-105
SERVICE TOOLS 01-107

ENGINE REMOVAL AND INSTALLATION

4 cylinders 1.6 1.8 2.0 2.0 iniezione

FOREWORD

This section covers engine removal and installation for the following Alfa Romeo vehicles:

- **Alfetta 1.6 (016.00) 1.8 (016.78) 2.0 (016.55) 2.0 Motronic (017.13)**
- **Alfa 90 1.8 (062.02) 2.0 (062.12) 2.0 Motronic (017.13)**
- ***Giulietta* 1.6 (016.00) 1.8 (016.78) 2.0 (016.55)**
- **Alfetta GTV 2.0 (016.55)**

Given the complexity of engine removal and installation procedures, the serviceman is advised to read the instructions given in this Manual attentively, and to study the accompanying illustrations and assembly drawings. Illustrations and assembly drawings which, though necessarily incomplete, are indispensable for a general understanding of the engines in question.

In this way, the serviceman will be able to master the correct service techniques for each engine, and will be familiar with the specifications and special procedures required for each.

ENGINE MOUNT LOCATION

Engine mount positions are shown below. As positions are the same for all vehicles covered herein, only one engine type is represented for the sake of clarity.

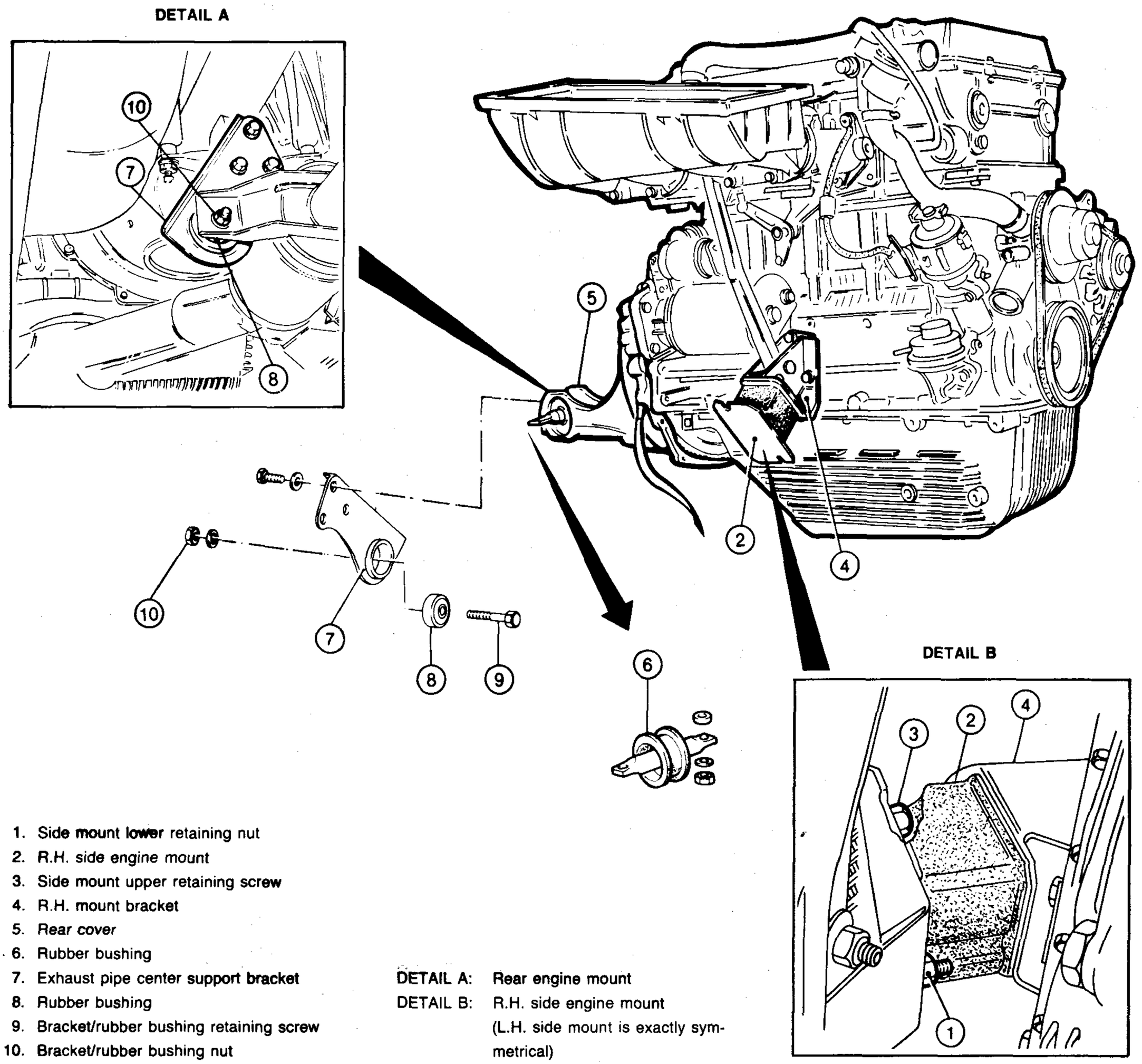

1. Side mount lower retaining nut
2. R.H. side engine mount
3. Side mount upper retaining screw
4. R.H. mount bracket
5. Rear cover
6. Rubber bushing
7. Exhaust pipe center support bracket
8. Rubber bushing
9. Bracket/rubber bushing retaining screw
10. Bracket/rubber bushing nut

DETAIL A: Rear engine mount
DETAIL B: R.H. side engine mount (L.H. side mount is exactly symmetrical)

ENGINE REMOVAL ALFETTA, ALFA 90 AND GIULIETTA VEHICLES

PRELIMINARY OPERATIONS

a. Place the vehicle over a garage lift and chock front wheels.

CAUTION:
When the engine is hot, proceed with caution to avoid burns.

---

b. **Alfetta and Alfa 90 vehicles:** lift covers from windshield wiper arm retaining nuts. Slacken nuts and remove wipers. Open hood and secure in open position with associated strut (1). Remove hinge bolts (2) and lay hood back in fully open position, **protecting contact points with suitable soft materials**. If necessary, disconnect engine compartment light supply (3) and ground (4) cables and windshield washer hose (5).

ALFETTA VEHICLE

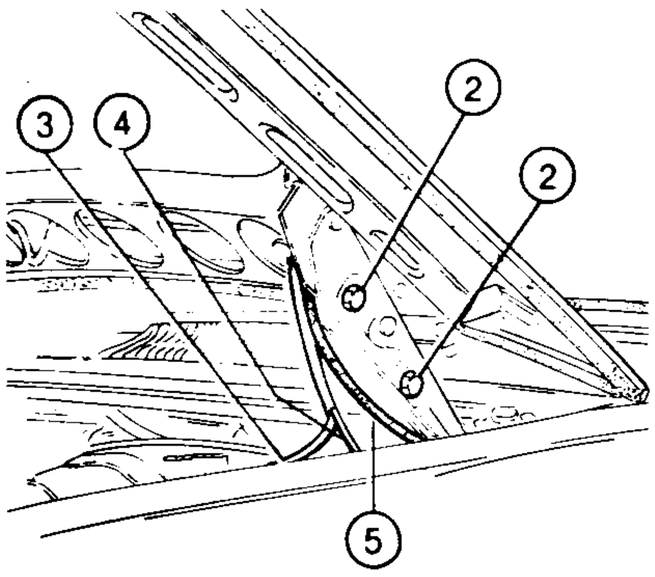

ALFA 90 VEHICLE

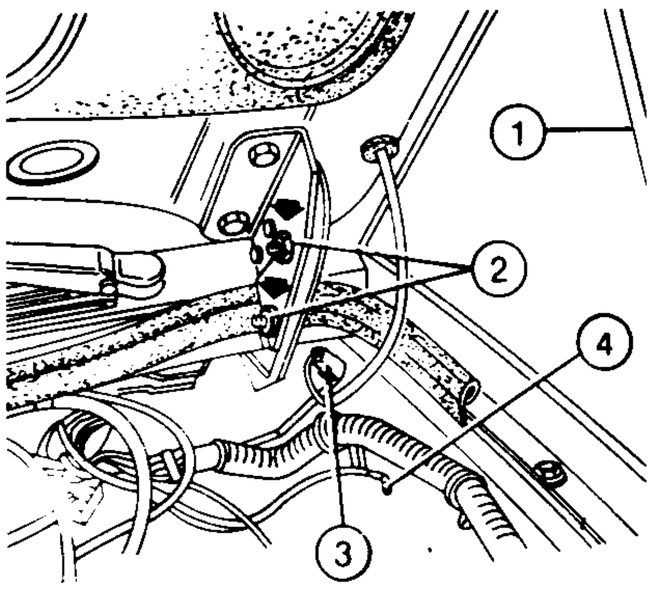

1. Strut
2. Bolts
3. Engine compartment light supply cable (in-line connection)
4. Engine compartment light ground cable
5. Windshield washer hose

c. **Giulietta vehicles:** place hood in fully open position.

CAUTION:
For maximum safety, the hood should be secured in the open position to prevent it from falling suddenly.

ENGINE COMPARTMENT COMPONENT DISCONNECTION

For location of parts identified by reference numbers below, see the view of the engine compartment for the vehicle in question.

a. Disconnect positive and negative cables from battery (1). Disconnect the battery tie rods and lift out battery complete with tray.

b. **Intake system disconnection**

— Remove clamp (2) and take off hot air intake hose (3).

— Release clips (4) and remove air cleaner cover (5) and filter element. **Alfa 90 vehicle:** air cleaner cover (5) should be removed together with corrugated cold air intake hose (5)A.

— Disconnect fuel lines as follows:
- disconnect line (6) from front carburetter fitting;
- disconnect fuel delivery line (7) from fuel pump;
- disconnect fuel suction line (8) from fuel pump.

CAUTION:
Fuel tank should be drained before disconnecting lines. After disconnection, line ends should be held up. Moreover, make sure that the workshop is provided with proper safety equipment.

---

c. **Cooling circuit disconnection**

— Place a suitable container under the vehicle to collect drained coolant.

— Disconnect lines as follows:
- disconnect suction hose (9) from water pump;
- disconnect delivery hose (10) from thermostat unit;
- disconnect heater return line (11) from water pump;
- disconnect heater delivery line (12) from cylinder head;
- disconnect expansion tank line (13) from radiator.

Alfa 90 vehicles:
- disconnect line (13)A from tee;
- disconnect vent line (13)B from thermostat unit.

d. **Radiator removal**

— Disconnect fan control cable (14) from temperature switch on radiator.

— Disconnect fan supply cable (15) from in-line connection.

— Remove screw (16) retaining radiator to body sheel, retrieving spacer and the two cushion pads.

— Remove radiator (17) together with fan (18).

e. Disconnect corrugated alternator cooling hose (19) from air intake and alternator guard, and remove hose.

f. Disconnect vacuum servo line (20) from intake manifold.

g. **Accelerator and choke cable disconnection**

— Turn acceletator lever and release detent (21) at end of cable.

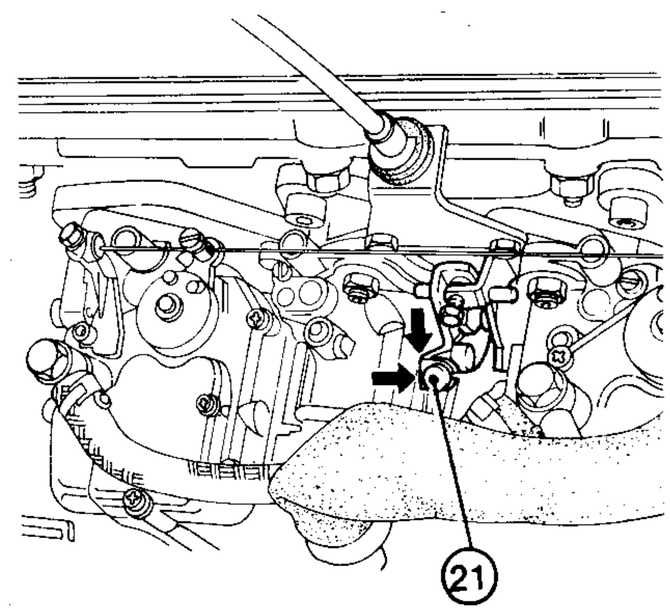

— Withdraw accelerator cable (22) together with sheath from bracket on carburetters.

— Slacken screws (23) retaining choke cable (24) to carburetter levers.

— Slacken sheath retaining screw (25) and withdraw choke cable (24).

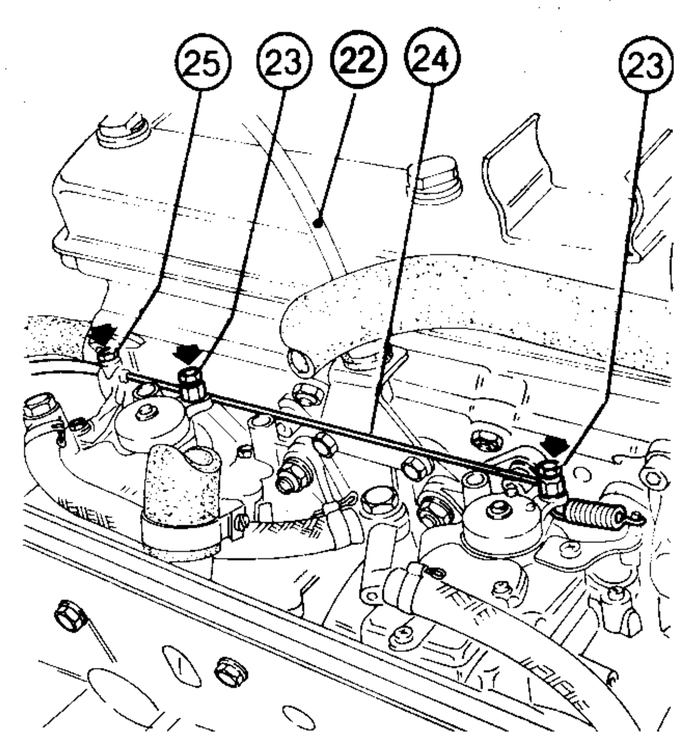

h. **Disconnect the following electrical cables and remove**, preferably as indicated:

— HT cable (26) from ignition coil.
— LT cable (27) from distributor.
— Supply (28) and field (29) cables from starter.
— Oil pressure indicator cable (30) from sending unit on engine block.
Alfa 90 vehicles: *throttle position sending unit cable (30)A from mobile connection.*

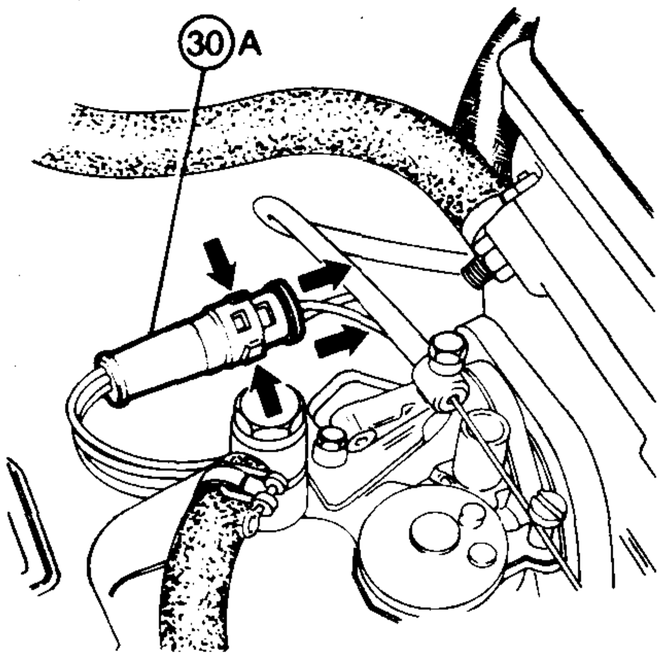

— Oil level indicator cable (31) from in-line connection adjacent to sending unit on engine block (see alternator position).
— Coolant temperature gauge cable (32) from sending unit on thermostat unit.
— Low coolant temperature indicator light cable (33) from sending unit on cylinder head.
— Low oil pressure indicator cable (34) from sending unit on engine block (see fuel pump position).
— Alternator supply and battery charge indicator cables (35) from terminal board (36) on vehicle L.H. side panel.

Release cables from any clips and arrange so they will not interfere with engine removal.

i. Remove two screws (37) retaining heat guard (38) on L.H. engine mount.

j. Remove upper retaining screws (39) from both side engine mounts.

UNDERBODY COMPONENT DISCONNECTION
(Alfetta and Giulietta vehicles)

For location of parts identified by reference numbers below, see view of vehicle underbody.

a. Raise vehicle on garage lift.

b. If operations to be carried out so require, remove plug (1) from oil pan, drain oil and replace plug.

c. **Exhaust pipe removal**

— Remove nuts and washers (2) retaining exhaust pipe (3) to exhaust manifold.
— Slacken nut on clamp (4) retaining exhaust pipe (3) to tail pipe (5).
— Support pipe and remove bolt (6) securing pipe to cushioned bracket (7) (silent-bloc).
— Free exhaust pipe from rubber support rings (8) and withdraw from tail pipe to remove.

d. Remove two screws (9) retaining bottom of heat guard (10) on L.H. engine mount. Take off heat guard.

e. Remove screw (11) connecting rear engine mount to engine block and disconnect ground cable (12).

f. **Gear remote control link removal**

— Take off boot (13) and remove bolt (14).
— Remove two nuts (15) retaining remote control link to remote control lever, and take off link.
— Back off four screws (16) retaining gear lever support to body shell so that support may be moved to facilitate propeller shaft removal. Leave support provisionally in this seat.
— Remove flywheel guard (17) from rear engine mount.

g. **Propeller shaft removal**

Propeller shaft must be rotated in order to gain access to the nuts and bolts retaining shaft to flywheel flange and clutch yoke.

— Remove nuts (18) containing front flexible coupling to flywheel flange, rotating propeller shaft as necessary.

Mark flexible coupling position on flange to ensure correct placement during installation.

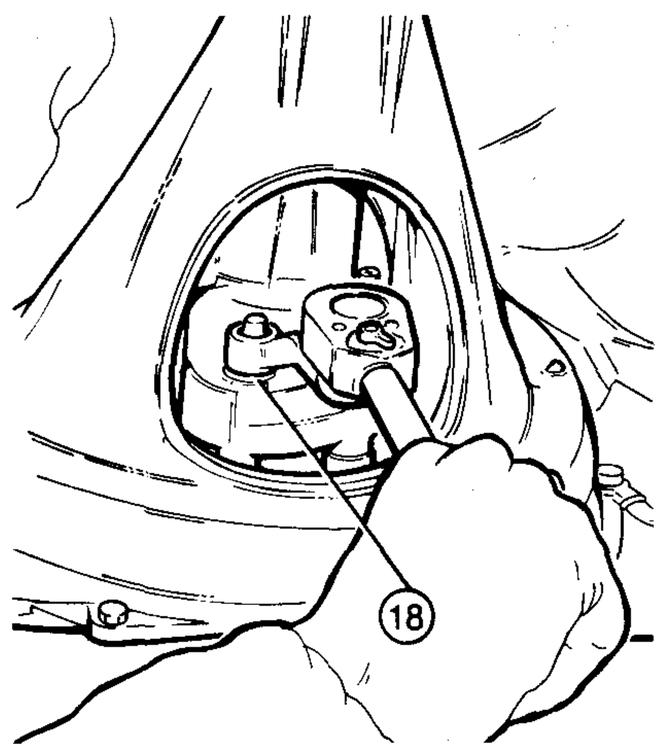

— Proceeding as described above, remove bolts connecting rear flexible coupling (19) to clutch yoke.

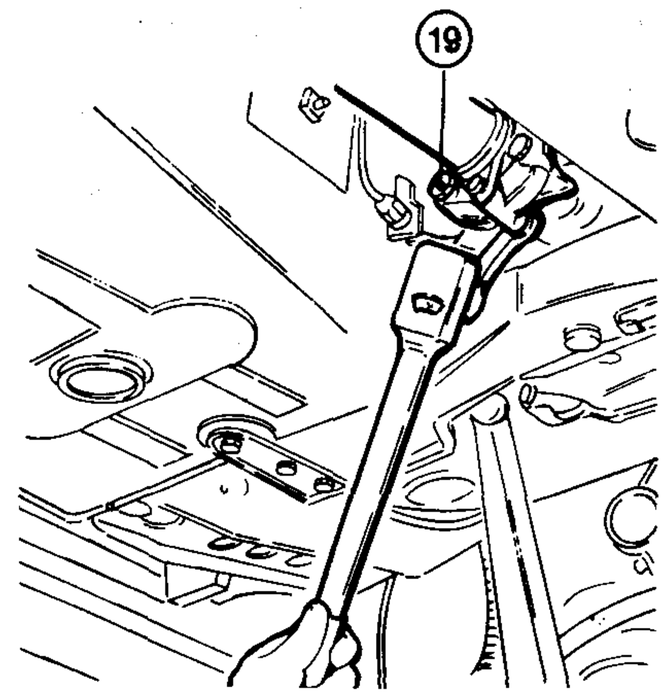

— Remove nuts (20) securing center bearing (21) to body shell.

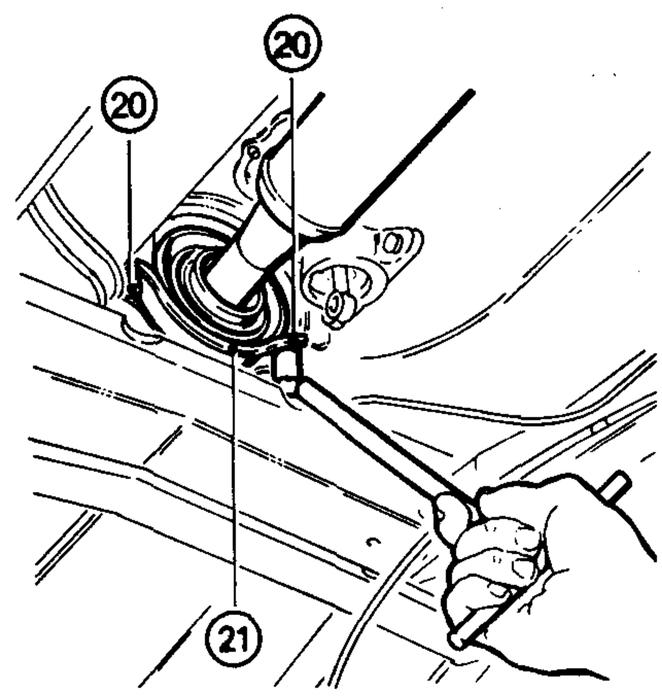

— Remove nuts (22) retaining rear engine mount (23) to body shell.

NOTE:
Retrieve washers between body shell and rear engine mount: on installation, they will be used to establish a 7 ± 1 mm (2.76 ± 0.04 in) clearance between propeller shaft and top of engine mount, which will prevent fouling.

— Free propeller shaft (24) from clutch shaft spigot, taking care not to damage seal (25) between flexible coupling and clutch yoke.

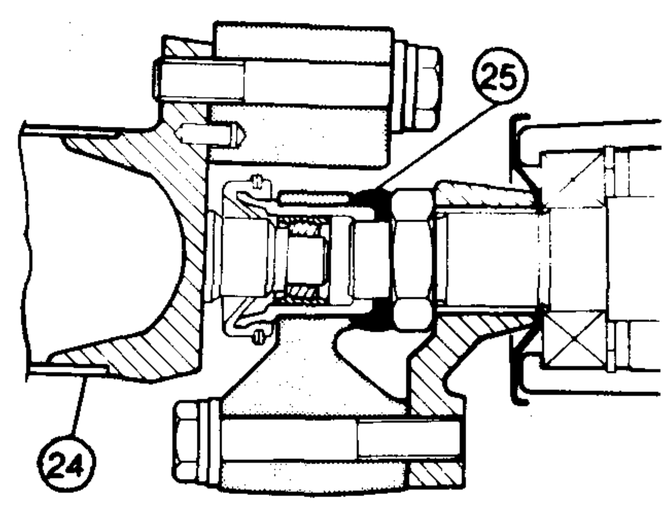

— Working from the rear of the vehicle, free center bearing (21) from studs and remove front bushing together with flexible coupling from flywheel spigot. Withdraw propeller shaft from transmission tunnel.

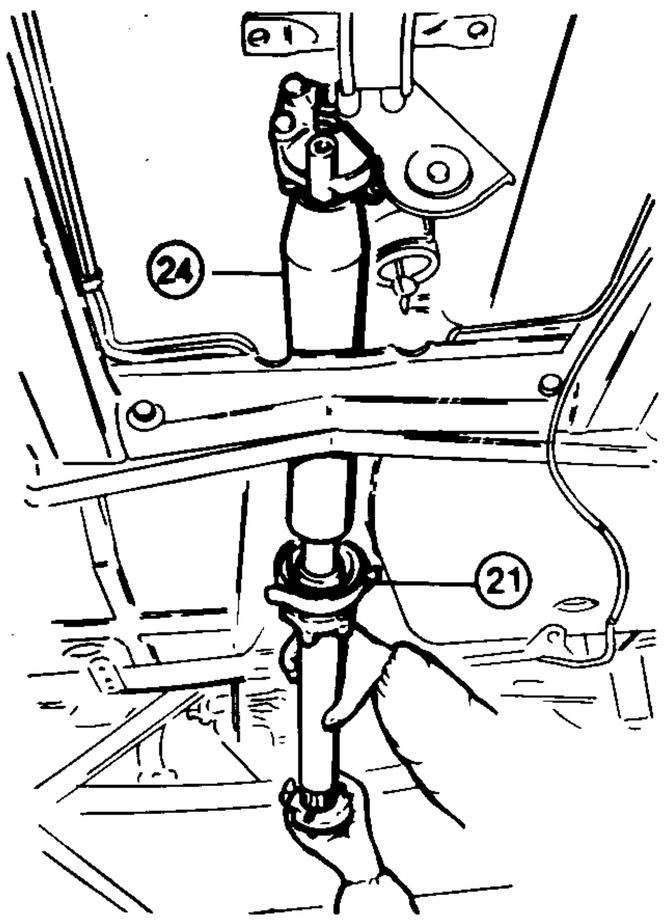

— Slacken three screws (26) and remove exhaust pipe bracket (7) from rear engine mount.

h. **Engine removal**

— Install a suitable lever on rear engine mount to facilitate engine removal.

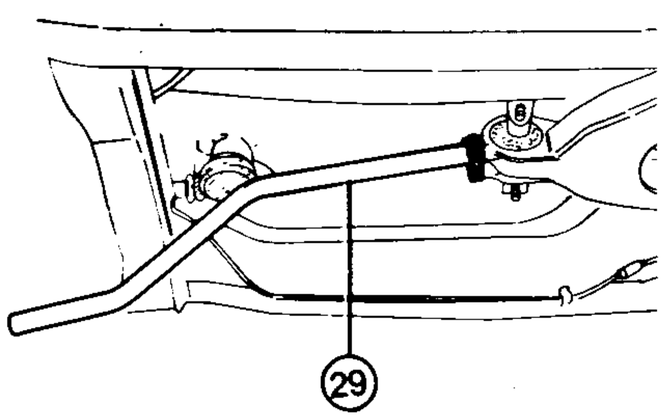

— Remove lower nuts (27) retaining engine mounts (28) to body shell.

— Hook a suitable hydraulic lift to engine lift bracket.

Activate lift and raise engine while tilting with lever (29).

If necessary, disconnect center spark plug cables and remove spark plug.

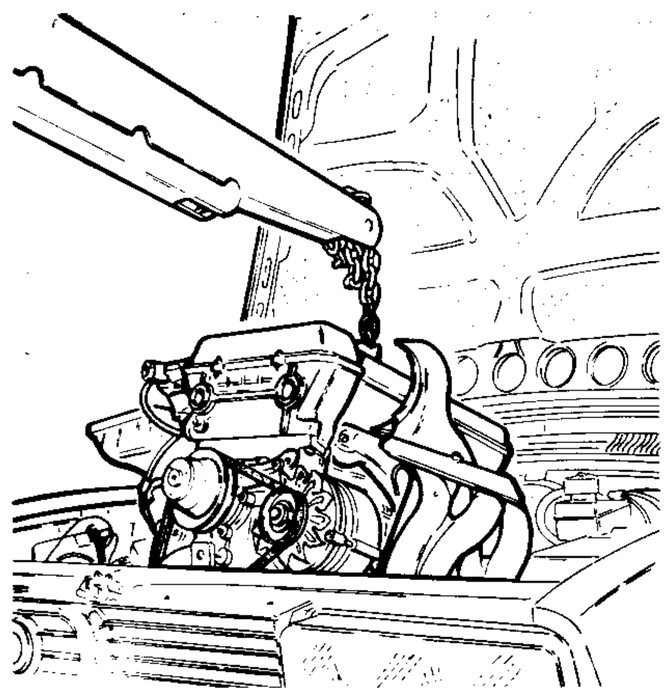

— Remove lever from rear engine mount.

UNDERBODY COMPONENT DISCONNECTION (Alfa 90 vehicles)

For location of parts identified by reference numbers below, see view of vehicle underbody.

a. Raise vehicle on garage lift.

b. If operations to be carried out so require, remove plug (1) from oil pan, drain oil and replace plug.

c. **Exhaust pipe removal**

— Remove nuts and washers (2) retaining exhaust pipe (3) to exhaust manifold.

— Slacken bolt (4) on clamp retaining exhaust pipe (3) to tail pipe (5).

— Support exhaust pipe and remove bolt (6) securing pipe to bracket (7).

— Free exhaust pipe from rubber support rings (8) and withdraw from tail pipe to remove.

d. Remove two screws (9) retaining bottom of heat guard (10) on L.H. engine mount.

Take off heat guard.

e. Remove screw (11) connecting rear engine mount to engine block and disconnect ground cable (12).

f. **Remote control link removal**

— Remove screws (13) retaining crossmember (14) to body shell and take off crossmember.

— Take off boot (15) and remove bolt (16).

— Back off four screws (17) retaining gear lever support to body shell so that support may be moved to facilitate propeller shaft removal. Leave support provisionally in its seat.

— Remove flywheel guard (18) from rear engine mount.

g. **Propeller shaft removal**

Propeller shaft must be rotated in order to gain access to the nuts and bolts retaining shaft to flywheel flange and clutch yoke.

— Remove nuts (19) connecting front flexible coupling to flywheel flange, rotating propeller shaft as necessary.

Mark flexible coupling position on flange to ensure correct placement during installation.

— Proceeding as described above, remove bolts connecting rear flexible coupling (20) to clutch yoke.

— Remove nuts (21) securing center bearing (22) to body shell.

— Remove nuts (23) retaining rear engine mount (24) to body shell.

NOTE:

Retrieve washers between body shell and rear engine mount: on installation, they will be used to establish a 7 ± 1 mm (2.76 ± 0.04 in) clearance between propeller shaft and top of engine mount, which will prevent fouling.

— Free propeller shaft (25) from clutch shaft spigot, taking care not to damage seal (26) between flexible coupling and clutch yoke.

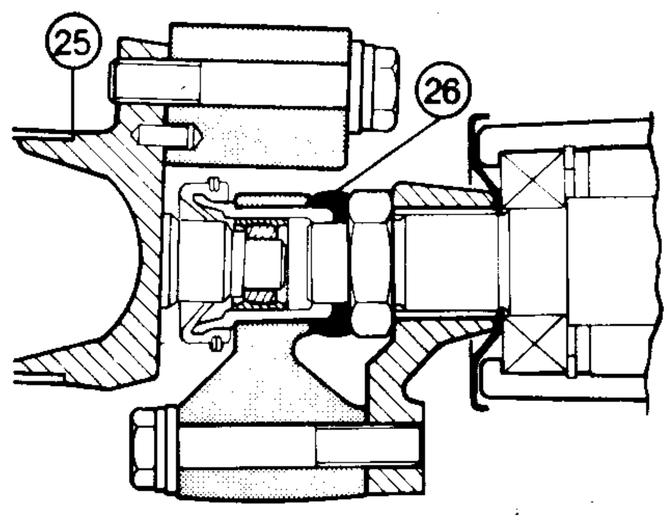

— Working from the rear of the vehicle, free center bearing (22) from studs, and remove front bushing together with flexible coupling from flywheel spigot. Withdraw propeller shaft from transmission tunnel.

— Slaken three screws (27) and remove exhaust pipe bracket (7) from rear engine mount.

— Back off socket screws and remove engine rev. and timing transducers from bell housing.

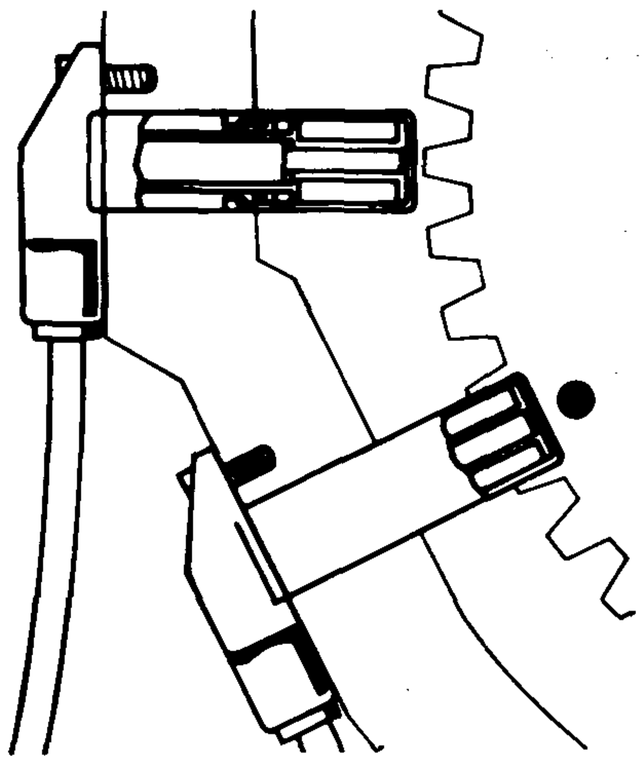

h. ***Engine removal***

— Install a suitable lever on rear engine mount to facilitate engine removal.

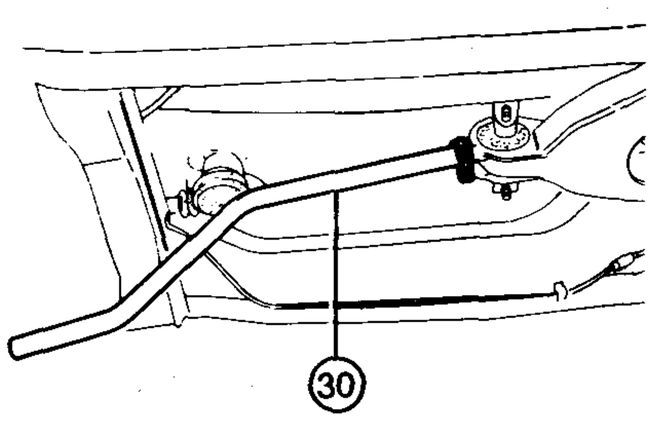

— Remove lower nuts (28) retaining engine mounts (29) to body shell.

— Hook a suitable hydraulic lift to engine lift bracket. Activate lift and raise engine while tilting with lever (30).

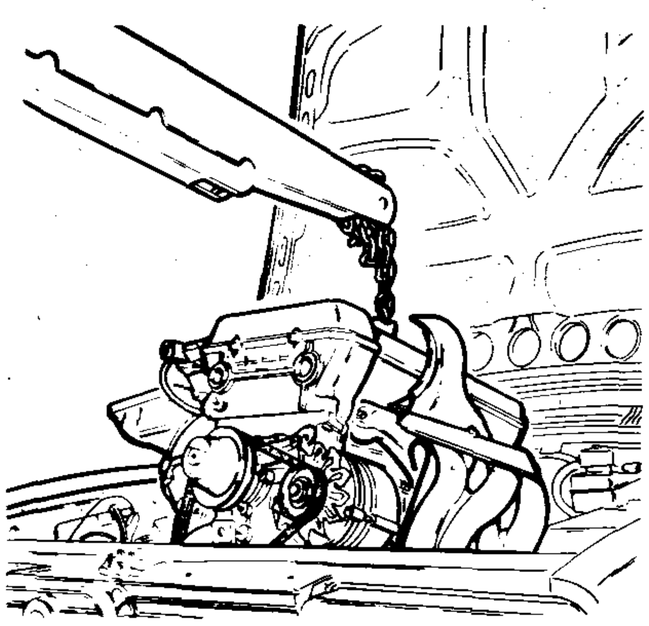

If necessary, disconnect center spark plug cables and remove spark plugs.

— Remove lever from rear engine mount.

ENGINE INSTALLATION ALFETTA, ALFA 90 AND GIULIETTA VEHICLES

UNDERBODY COMPONENT INSTALLATION

(Alfetta and Giulietta vehicles)

a. Install lever on rear engine mount.

b. Hook a suitable hydraulic lift to engine lift bracket and raise engine.

Lower engine slowly into engine compartment, using lever to position correctly.

Centralize engine in the engine compartment so that it rests on the two side mounts. Check that screw and stud holes on both mounts are aligned.

c. Tighten engine mount upper retaining screws on the both sides.

For location of parts identified by *reference numbers below, see view of* vehicle underbody.

d. Raise vehicle and tighten engine mount (28) lower retaining nuts (27) on both sides of crossmember.

e. Remove lever (29) from rear engine mount. Install exhaust pipe bracket (7) on mount and secure through associated screws (26).

f. **Propeller shaft installation**

— Place propeller shaft (24) in transmission tunnel. Secure rear engine mount (23) and spacers to body shell through nuts (22). Position centralizer dowels for both flexible couplings.

— Install propeller shaft assy in vehicle *by following the removal procedures in* reverse order and noting the points below.

— *Position flexible couplings as indicated* by the marks applied on removal.

— **Lubricate** the following with ISECO Molykote G Rapid grease (Part No. 3671-69842): front clearance take-up bushing and ball joint working surfaces, center ball joint and socket working surface.

— **Lubricate** the flywheel bushing with ISECO Molykote BR2 grease (Part No. 3671-69841). Pack the following components with **5 cm³ (0.2 fl.oz)** of grease: propeller shaft front bushing, center bushing and seal, and rear centralizer bushing on flexible coupling.

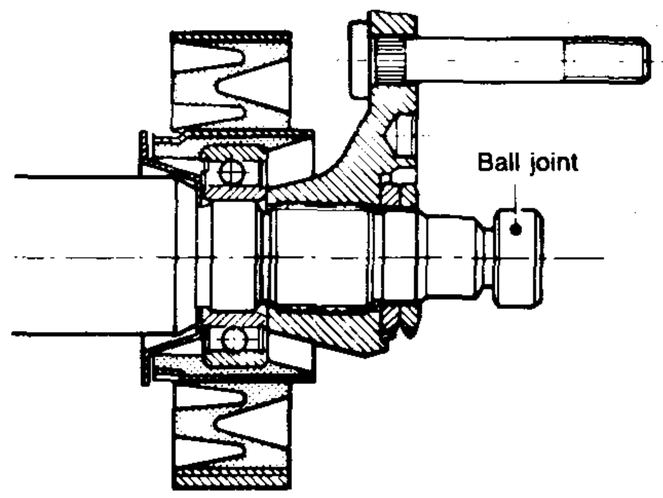

— Finger tighten the nuts and bolts retaining front (18) and rear (19) flexible coupling to flywheel and clutch yoke respectively. Start nuts (20) retaining center bearing (21) to vehicle underbody.

— Tighten flexible coupling nuts and bolts *to the torques specified below while* suitably blocking propeller shaft rotation.

(T) : **Tightening torque**
Nuts retaining propeller shaft flexible coupling to flywheel and clutch yoke.

a) With torque wrench applied directly to nut
39 to 49 Nm
(4 to 5 kgm
28.8 to 36.1 ft.lb)

b) With extension A.5.0190/92 and torque wrench with 300 or 400 mm (11.81 or 15.75 in) lever arm
33 to 41 Nm
(3.4 to 4.2 kgm
24.4 to 30.2 ft.lb)

— Tighten nuts (20) retaining center bearing (21) to vehicle underbody.

(T) : ***Tightening torque***
Center bearing retaining nuts
93 to 103 Nm
(9.5 to 10.5 kgm
68.6 to 76.0 ft.lb)

— Install flywheel guard (17) on rear engine mount.

g. **Install remote control link, following removal** procedure in reverse order.

Tighten nuts (15) securing remote control link to remote control lever.

(T) : **Tightening torque**
Nuts retaining selector link to lever
28 to 31 Nm
(2 to 3.2 kgm
20.7 to 22.8 ft.lb)

h. Install heat guard (10) on L.H. engine mount and secure at bottom through two screws (9).

i. Connect ground cable (12) to rear engine mount through screw (11).

j. Exhaust pipe installation

— Connect exhaust pipe (3) to tail pipe (5) provided with clamp (4).

— Secure exhaust pipe temporarily to bracket (7) using bolt (6). Hook tail pipe to rubber support rings (8).

— Position pipe so that front end of exhaust pipe is aligned with exhaust manifold. Install gaskets on manifold and secure through nuts and washers (2).

— Turn down nut on bolt (6) securing bracket (7).

UNDERBODY CONNECTIONS (Alfa 90 vehicle)

a. Install lever on rear engine mount.

b. Hook a suitable hydraulic lift to engine lift bracket and raise engine.

Lower engine slowly into engine compartment, using lever to position correctly.

Centralize engine in the engine compartment so that it rests on the two side mounts.

Check that screw and stud holes on both mounts are aligned.

c. Tighten engine mount upper retaining screws on both sides.

For location of parts identified by reference numbers below, see view of vehicle underbody.

d. Raise vehicle and tighten engine mount (29) lower retaining nuts (28) on both sides.

e. Remove lever from rear engine mount. Install exhaust pipe bracket (7) on mount and secure through associated screws (27).

f. **Propeller shaft installation**

— Place propeller shaft (25) in transmission tunnel. Secure rear engine mount (24) and spacers to body shell through nuts (23).
Position centralizer dowels for both flexible couplings.

— Install propeller shaft assy in vehicle by following the removal procedure in reverse order and noting the points below.

— Position flexible couplings as indicated by the marks applied on removal.

— Pack the propeller shaft front bushing and the rear ball joint socket with **5 cm³ (0.2 fl.oz)** of ISECO Molykote BR2 grease (Part No. 3671-69841).

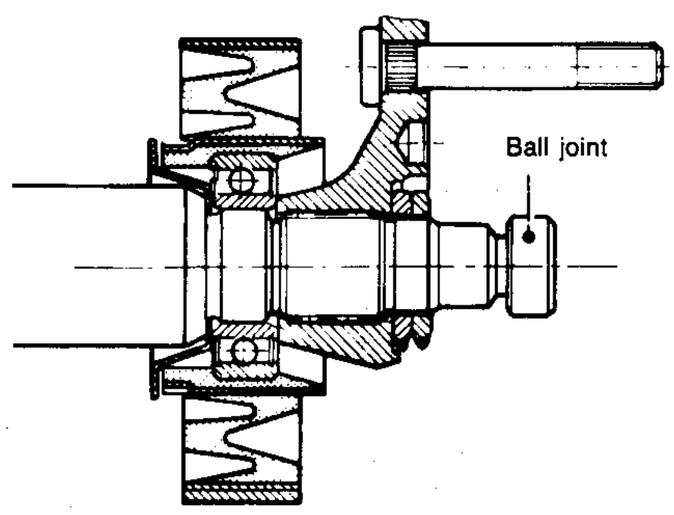

— Finger tighten the nuts and bolts retaining front (19) and rear (20) flexible couplings to flywheel and clutch yoke respectively.
Start nuts (21) retaining center bearing (22) to vehicle underbody.

— Tighten flexible coupling nuts and bolts to the torques specified below while suitably blocking propeller shaft rotation.

(T) : **Tightening torque**
Nuts retaining propeller shaft flexible coupling to flywheel and clutch yoke
40 to 45 Nm
(4.1 to 4.5 kgm
29.5 to 33.2 ft.lb)

— Tighten nuts (21) retaining center bearing (22) to vehicle underbody.

(T) : **Tightening torque**
Center bearing retaining nuts
93 to 103 Nm
(9.5 to 10.5 kgm
68.6 to 76.0 ft.lb)

— Install flywheel guard (18) on rear engine mount.

g. **Install remote control link** following removal procedure in reverse order.

h. Secure crossmember (14) to body shell through screws (13).

i. Install heat guard (10) on L.H. engine mount and secure at bottom through two screws (9).

j. Connect ground cable (12) to rear engine mount through screw (11).

k. **Exhaust pipe installation**

— Connect exhaust pipe (3) to tail pipe (5) provided with clamp.

— Secure exhaust pipe temporarily to bracket (7) using bolt (6). Hook tail pipe to rubber support rings (8).

— Position pipe so that front end of exhaust pipe is aligned with exhaust manifold..
Install gaskets on manifold and secure through nuts and washers (2).

— Turn down nut on bolt (6) securing bracket (7).

— Tighten bolt (4) on exhaust pipe/tail pipe clamp.

ENGINE COMPARTMENT CONNECTIONS

For location of parts identified by reference numbers below see view of engine compartment for the vehicle in question.

a. Lower vehicle and secure top of heat guard (38) through screws (37).

b. Secure top of engine mounts to crossmember through screws (39).

c. Restore all electrical connections.

To do so, follow the procedure described in paragraph h., «Engine compartment disconnection», in reverse order.

d. Connect accelerator and choke cables by following the procedure described in paragraph g., «Engine compartment component disconnection», in reverse order.

e. Install radiator and fan by following the procedure described in paragraph d., «Engine compartment component disconnection», in reverse order.

f. Connect cooling circuit lines by following the procedure described in paragraph c., «Engine compartment component disconnection», in reverse order.

g. Install air cleaner cover (5) with filter element and secure through clips (4).

Connect intake system by following the pro-

cedure described in paragraph b., «Engine compartment component disconnection», in reverse order.

h. Connect all remaining lines and/or components by following removal and disconnection procedure in reverse order.

i. Position battery (1) and associated tray in engine compartment.

Secure battery with retainer and connect terminals.

j. Top up fluids and lubricants and carry out adjustments as described in the «Specifications» paragraph of each Group. For **Alfa 90** vehicles, see also «GROUP 00».

k. Hold up hood and install hinge bolts on both sides of vehicle.

l. Install windshield wiper arms and blades.

VIEW OF ENGINE COMPARTMENT ALFETTA AND GIULIETTA VEHICLES

Engine compartment components to be removed or disconnected are listed below in numerical order. For further details, see «ENGINE REMOVAL AND INSTALLATION PROCEDURES».

1. Battery
2. Clamp
3. Hot air intake hose
4. Clips
5. Air cleaner cover
6. Fuel line (filter to carburetters)
7. Fuel delivery line
8. Fuel suction line
9. Coolant suction hose (radiator to pump)
10. Coolant delivery hose (thermostat to radiator)
11. Heater return line
12. Heater delivery line
13. Expansion tank line
14. Fan control cable
15. Fan supply cable
16. Radiator retaining screw
17. Radiator
18. Fan
19. Carburetter hose
20. Vacuum servo line
21. Accelerator cable detent
22. Accelerator cable
23. Choke cable retaining screw
24. Choke cable
25. Sheath retaining screw
26. HT cable
27. LT cable
28. Starter supply cable
29. Starter field cable
30. Engine oil pressure indicator cable
31. Engine oil level indicator cable
32. Coolant temperature gauge cable
33. High coolant temperature indicator cable
34. Low engine oil pressure indicator cable
35. Alternator supply and battery charge indicator cables
36. Terminal board
37. Heat guard upper retaining screws
38. Heat guard
39. Engine mount upper retaining screws

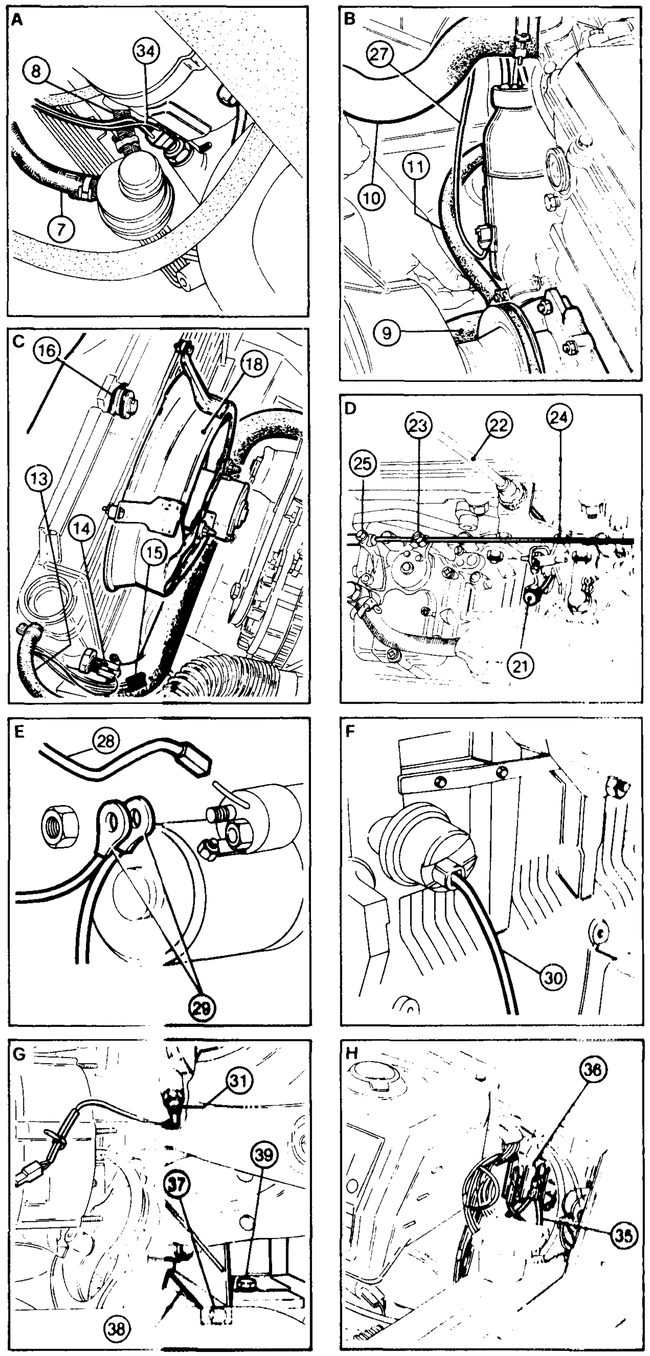

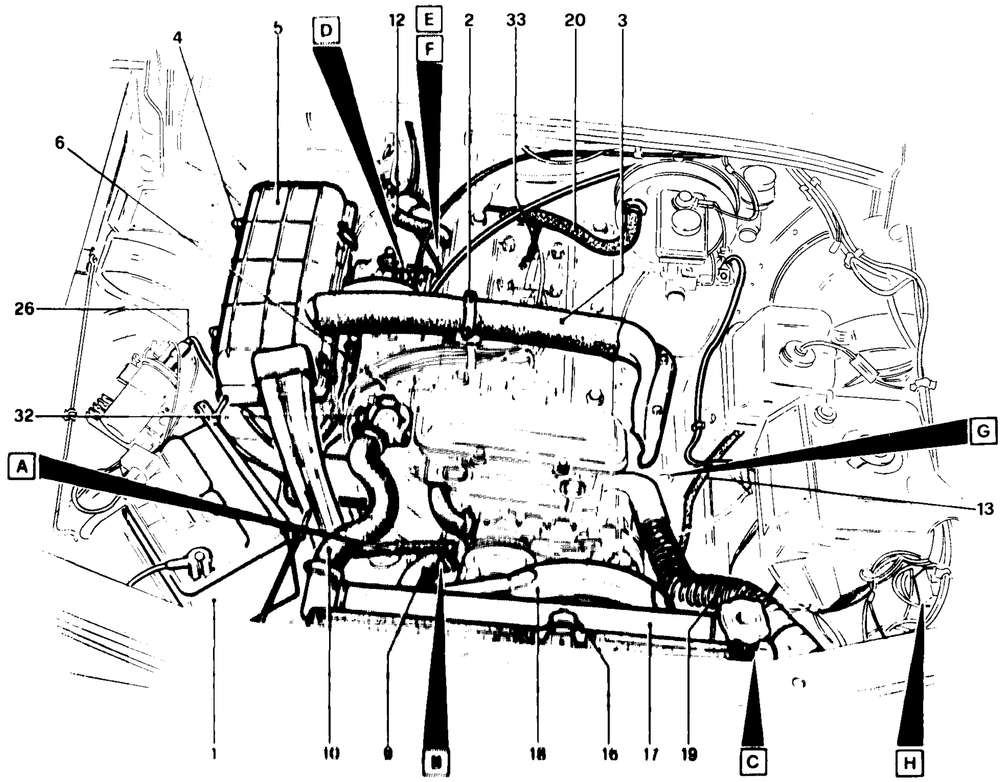

VIEW OF UNDERBODY ALFETTA, GIULIETTA AND GTV 2.0 VEHICLES

Underbody components to be removed or disconnected are listed below in numerical order. For further details, see «ENGINE REMOVAL AND INSTALLATION PROCEDURES».

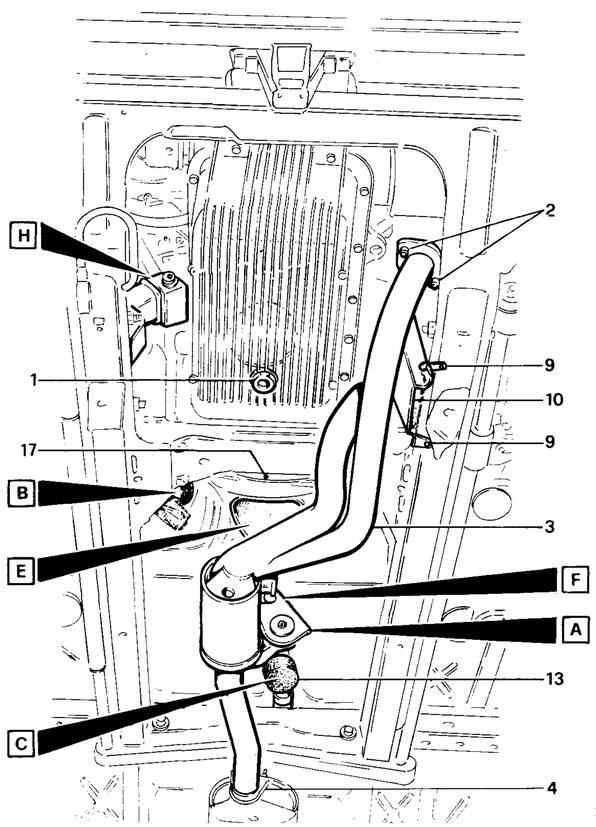

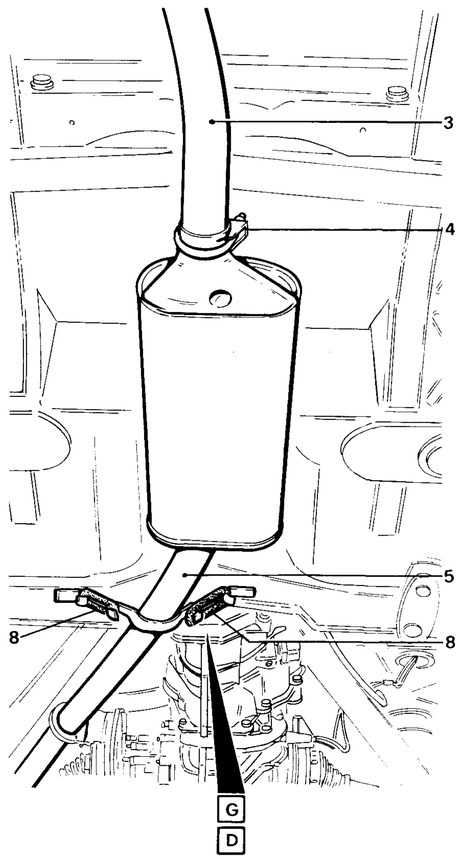

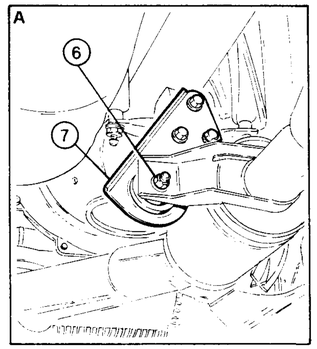

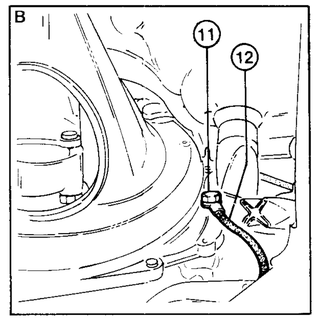

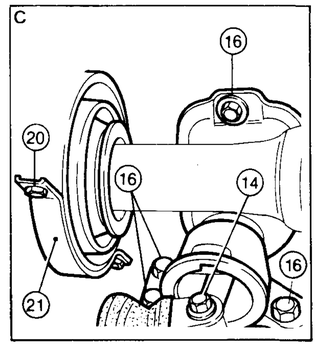

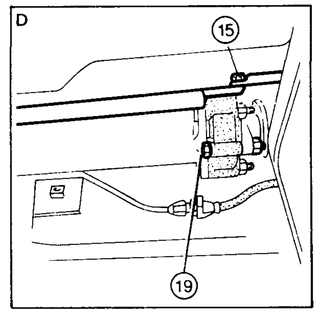

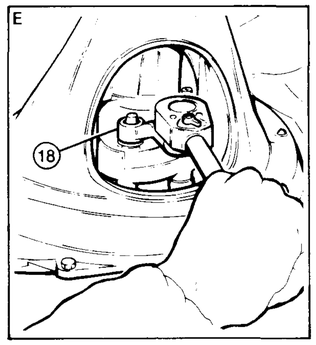

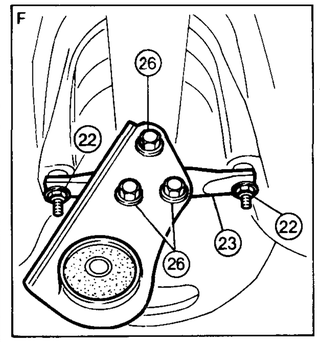

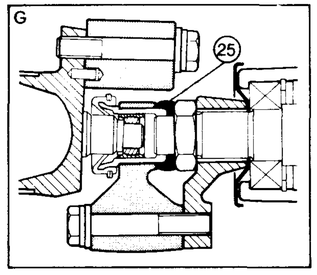

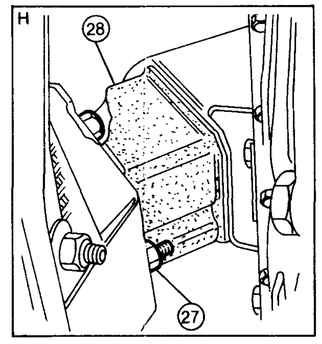

1. Oil drain plug
2. Nuts and washers
3. Exhaust pipe
4. Clamp
5. Tail pipe
6. Bolt
7. Center bracket
8. Rubber support rings
9. Heat guard lower retaining screws
10. Heat guard
11. Ground cable retaining screw
12. Ground cable
13. Boot
14. Remote control lever to link bolt
15. Remote control link nuts
16. Gear lever support screws
17. Flywheel guard
18. Front flexible coupling/flywheel nuts
19. Rear flexible coupling/clutch yoke bolts
20. Center bearing nuts
21. Center bearing
22. Rear engine mount nuts
23. Rear engine mount
24. Propeller shaft
25. Grease seal
26. Exhaust pipe bracket screws
27. Side engine mount nuts
28. Side engine mounts

VIEW OF ENGINE COMPARTMENT ALFA 90 1800 (062.02) - 2000 (062.12) VEHICLES

Engine compartment components to be removed or disconnected are listed below in numerical order. For further details, see «ENGINE REMOVAL AND INSTALLATION PROCEDURES».

1. Battery
2. Clamp
3. Hot air intake hose
4. Clips
5. Air cleaner cover
5A. Cold air intake hose
6. Fuel line (filter to carburetters)
7. Fuel delivery line
8. Fuel suction line
9. Coolant suction hose (radiator to pump)
10. Coolant delivery (thermostat to radiator)
11. Heater return line
12. Heater delivery line
13. Expansion tank line
13A. Expansion tank/tee line
13B. Vent line
14. Fan control cable
15. Fan supply cable
16. Radiator retaining screw
17. Radiator
18. Fan
19. Carburetter hose
20. Vacuum servo line
21. Accelerator cable detent
22. Accelerator cable
23. Choke cable retaining screw
24. Choke cable
25. Sheath retaining screw
26. HT cable
27. LT cable
28. Starter supply cable
29. Starter field cable
30. Engine oil pressure indicator cable
30A. Throttle position sending unit cable
31. Engine oil level indicator cable
32. Coolant temperature gauge cable
33. High coolant temperature indicator cable
34. Low engine oil pressure indicator cable
35. Alternator supply and battery charge indicator cables
36. Terminal board
37. Heat guard upper retaining screws
38. Heat guard
39. Engine mount upper retaining screws

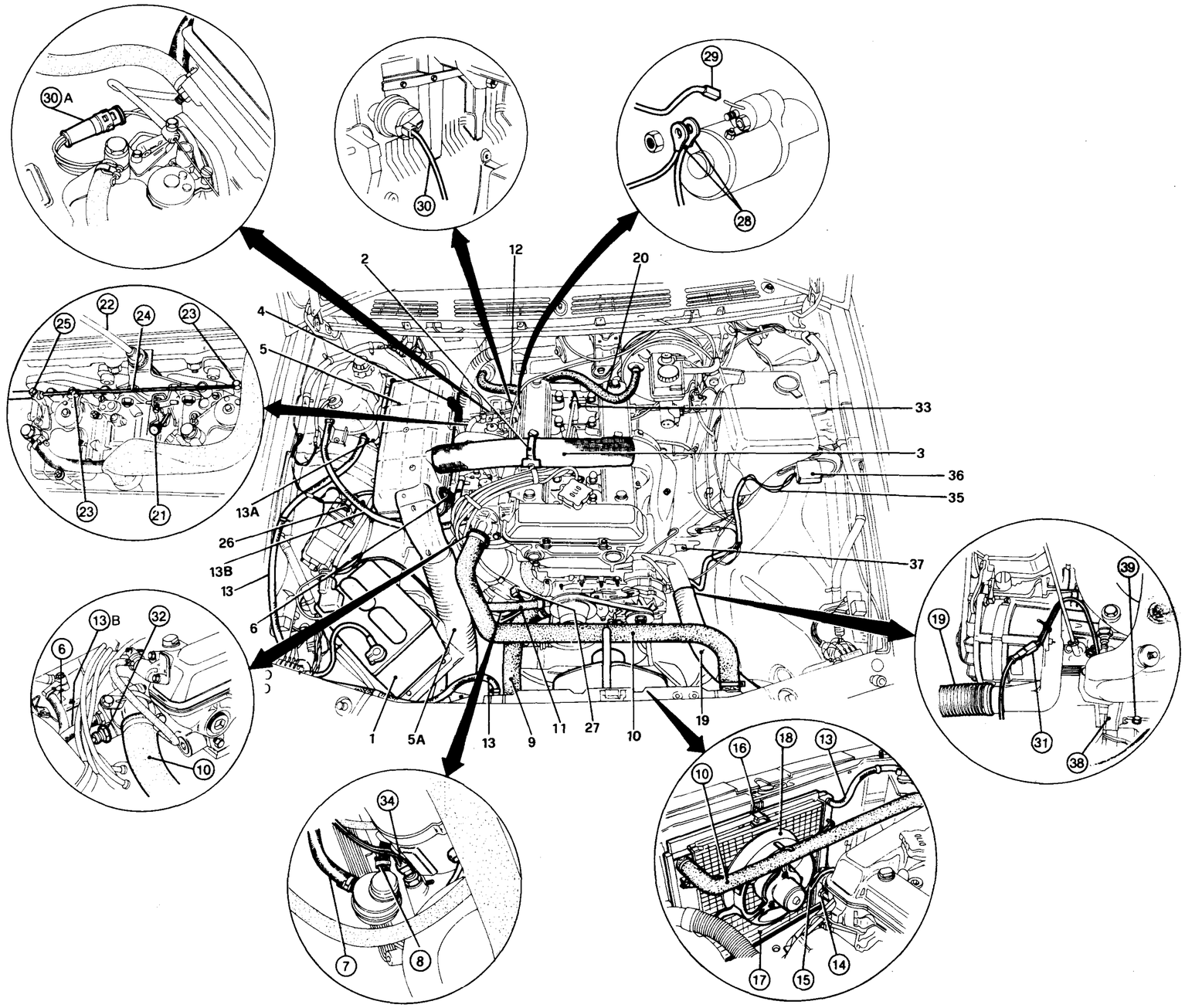

VIEW OF UNDERBODY ALFA 90 1800 (062.02) - 2000 (062.12) - 2000 (017.13) VEHICLES

Underbody components to be removed or disconnected are listed below in numerical order. For further details, see «ENGINE REMOVAL AND INSTALLATION PROCEDURES».

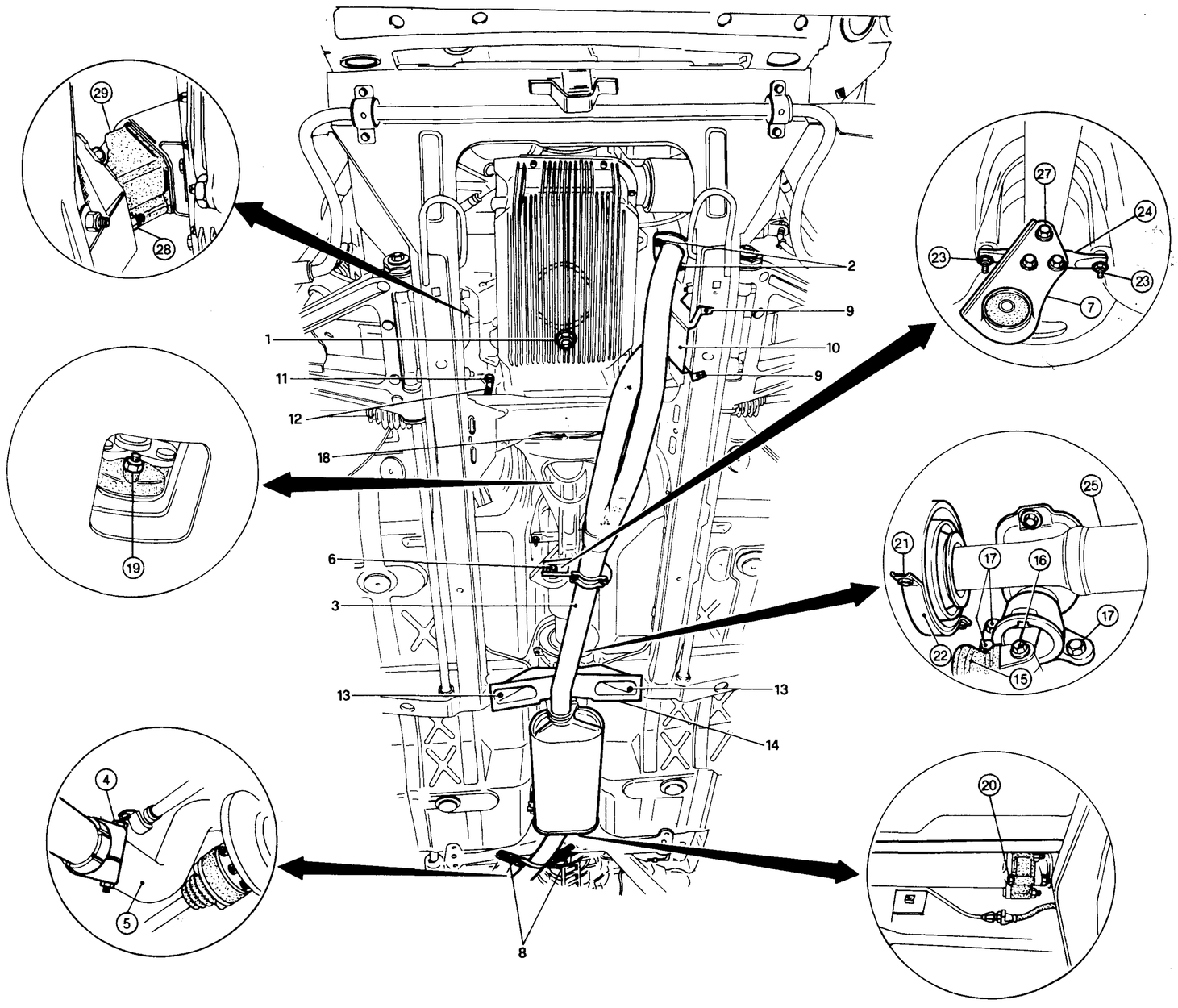

1. Oil drain plug
2. Nuts and washers
3. Exhaust pipe
4. Bolt
5. Tail pipe
6. Bolt
7. Center bracket
8. Rubber support rings
9. Heat guard lower retaining screws
10. Heat guard
11. Ground cable retaining screw
12. Ground cable
13. Crossmember retaining screws
14. Crossmember
15. Boot
16. Remote control link to lever bolt
17. Gear lever support screws
18. Flywheel guard
19. Front flexible coupling/flywheel nuts
20. Rear flexible coupling/clutch yoke bolts
21. Center bearing nuts
22. Center bearing
23. Rear engine mount nuts
24. Rear engine mount
25. Propeller shaft
26. Grease seal
27. Exhaust pipe bracket screws
28. Side engine mount nuts
29. Side engine mounts

ENGINE REMOVAL ALFETTA AND ALFA 90 MOTRONIC (017.13) VEHICLES

PRELIMINARY OPERATIONS

a. Place the vehicle over a garage lift and chock front wheels.

CAUTION:
When the engine is hot, proceed with caution to avoid burns.

---

b. Lift covers from covers from windshield wiper arm retaining nuts.
Slacken nuts and remove wipers.
Open hood and secure in open position with associated strut (1). Remove hinge bolts (2) and lay hood back in fully open position, **protecting contact areas with suitable soft materials**.
If necessary, disconnect engine compartment light supply (3) and ground (4) cables and windshield washer hose (5).

ALFETTA VEHICLE

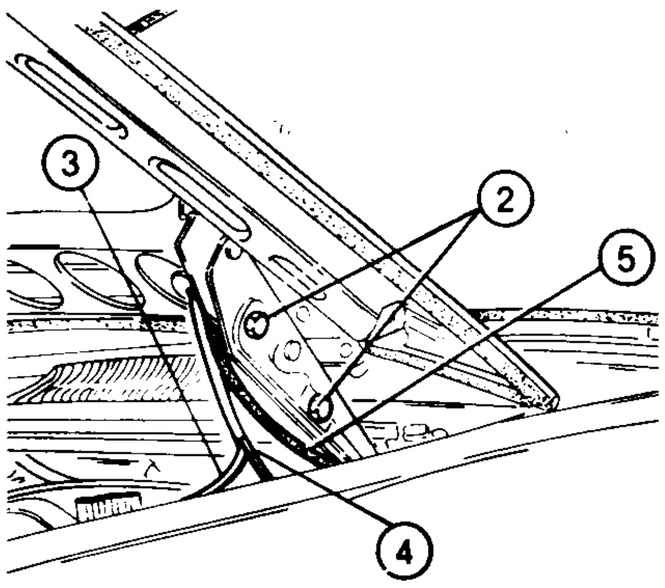

ALFA 90 VEHICLE

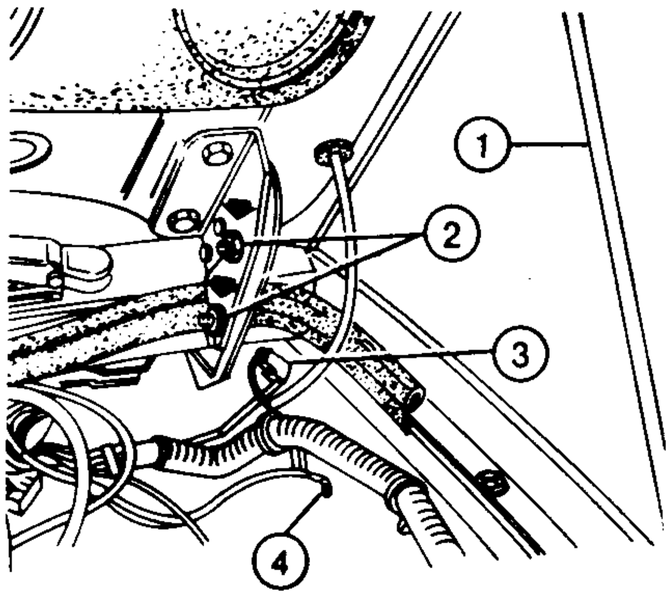

1. Strut
2. Bolts
3. Engine compartment light supply (in-line connection)
4. Engine compartment light ground cable
5. Windshield washer hose

CAUTION:
For maximum safety, the hood should be secured in the open position to prevent it from falling suddenly.

ENGINE COMPARTMENT COMPONENT DISCONNECTION

For location of parts identified by reference numbers below, see the view of the engine compartment for the vehicle in question.

a. Disconnect positive and negative cables from battery (1). Disconnect the battery tie rods and lift out battery complete with tray.

b. **Cooling circuit disconnection**
— Place a suitable container under the vehicle to collect drained coolant.
— Disconnect lines as follows:
• disconnect suction hose (2) from water pump;
• disconnect delivery hose (3) from thermostat unit;
• disconnect heater return line (4) from water pump;
• disconnect expansion tank/radiator line (5) from radiator;
• disconnect expansion tank/cooling circuit line (6) from pipe tee;
• disconnect heater delivery (7);
• disconnect vent line (8).

c. **Radiator removal**
— Disconnect fan control cable (9) from temperature switch on radiator.
— Disconnect fan supply cable (10) from in-line connection.
— Remove screw (11) retaining radiator to body shell, retrieving spacer and the two cushion pads.
— Remove radiator (12) together with fan (13).

d. **Air intake circuit removal**
— Disconnect cable (14) from air flow sensor.
— Slacken screws on clips (15) and remove corrugated intake duct (16).
— Release clips (17), remove cover (18) together with air flow sensor, and take out the filter element.

e. **Fuel supply circuit disconnection**

CAUTION:
Fuel supply circuit is pressurized. Consequently, fuel tank should be drained before disconnecting delivery line. After disconnection, line ends should be held up.
Moreover, make sure that the workshop is provided with proper equipment, so as to work safely.

— Disconnect lines as follows:
• disconnect fuel delivery line (19) and remove from fuel inlet manifold side;
• disconnect fuel leak-back line (20) and remove from pressure regulator side.

f. **Accelerator cable disconnection**
— Turn accelerator lever so as to relieve tension on cable and free detent at cable end.
— Release lever and withdraw accelerator cable (21) with associated sheath from bracket.

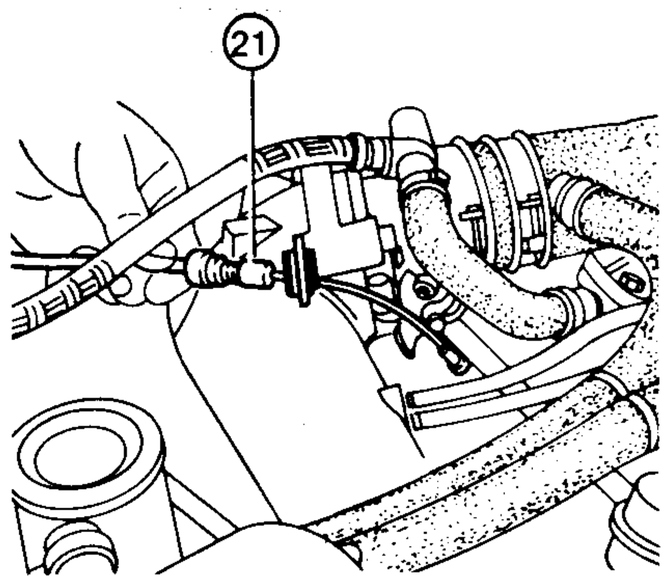

g. Detach corrugated alternator cooling hose (22) from air intake and from seat on alternator. Remove hose.

h. Disconnect vacuum servo line (23) from intake manifold.

i. **PVC circuit disconnection:**
— Disconnect crankcase vapour line (24) from valve cover.
— Disconnect oil vapour recirculation line (25) from throttle body.
— Disconnect separator return line (26) from dipstick base.

j. **Disconnect the following electrical cables** and remove, preferably as indicated.

— HT cable (27) from ignition coil.
— Alternator supply cable (28) and battery charge indicator cable (29) from terminal board (30) on L.H. side of vehicle (first remove cover).
— Supply cable (31) and field cable (32) from starter.
— Engine oil pressure indicator cable (33) from sending unit on engine block.
— Valve timing variator cable (34) from variator.
— Control cables (35) from electroinjectors.
— Coolant temperature sensor cable (36) from sensor on cylinder head.
— Coolant temperature gauge cable (37) from sending unit on cylinder head.
— High coolant temperature indicator cable (38) from sending unit on cylinder head.
— Throttle position sending unit cable (39) from idle or WOT contact.
— Auxiliary air cable (40) from auxiliary air valve.
— Ground cable (41) from intake manifold and from auxiliary air valve.
— Rev. and timing transducer cables (42) from associated connections.

NOTE:
Withdraw electroinjector cables together with all other cables contained in the same sheath.

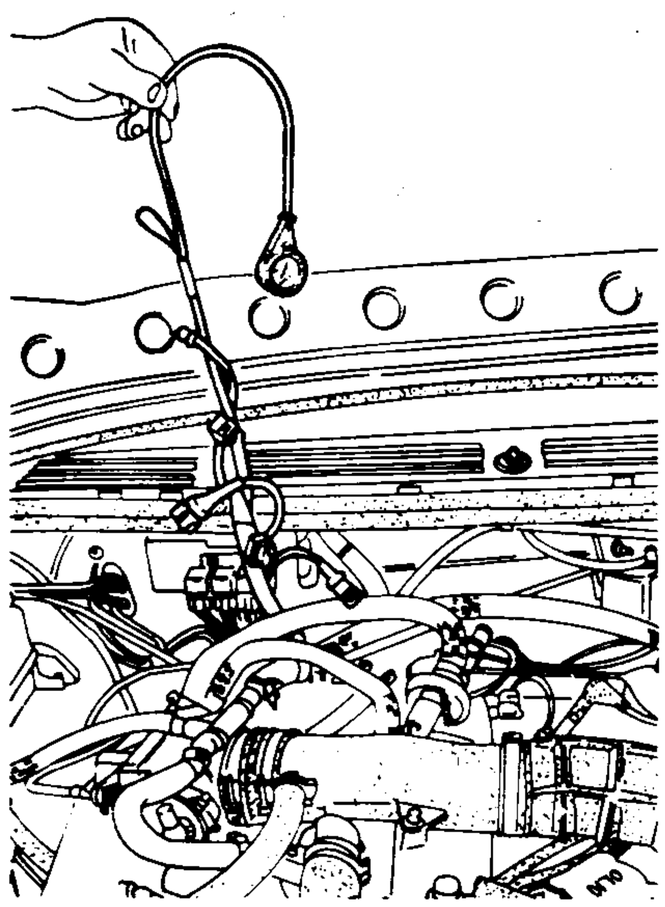

— Engine oil level indicator cable (43) from in-line connection adjacent to sensor on engine block (see alternator position).
— Low engine oil pressure indicator cable (44) from sending unit on engine block (see distributor position).

Release cables from any clips and arrange so they will not interfere with engine removal.

k. Remove two screws (45) retaining heat guard on L.H. engine mount.
l. Remove upper retaining screws (46) from both side engine mounts.
m. **Power steering circuit disconnection**

— Disconnect supply line (47) from power steering unit.
— Disconnect exhaust line (48) from power steering unit.

UNDERBODY COMPONENT DISCONNECTION

Alfetta Motronic vehicles: follow procedure described in paragraphs a. through h. for standard Alfetta and Giulietta vehicles.
For location of parts, see view of underbody, Alfetta and Giulietta vehicles.

Alfa 90 Motronic vehicles: follow procedure described in paragraphs a. through h. for standard Alfa 90 vehicles.
For location of parts, see view of underbody, Alfa 90 vehicles.

ENGINE INSTALLATION ALFETTA AND ALFA 90 MOTRONIC (017.13) VEHICLES

UNDERBODY COMPONENT INSTALLATION

Alfetta Motronic vehicles: follow procedure described in paragraph a. through j. for standard Alfetta and Giulietta vehicles.
For location of parts, see view of underbody, Alfetta and Giulietta vehicles.

Alfa 90 Motronic vehicles: follow procedure described in paragraphs a. through k. for standard Alfa 90 vehicles.
For location of parts, see view of underbody, Alfa 90 vehicles.

ENGINE COMPARTMENT CONNECTIONS

For location of parts identified by reference numbers below, see view of engine compartment for the vehicle in question.

a. Lower vehicle and secure top of heat guard through screws (45).
b. Secure top of engine mounts to crossmember through screws (46).
c. Connect power steering supply line (47) and exhaust line (48). Restore all electrical connections; to do so, follow the procedure described in paragraph j., «Engine compartment component disconnection», in reverse order.
d. Connect PVC circuit lines following the procedure described in paragraph i., «Engine compartment component disconnection», in reverse order.
e. Connect accelerator cable following the procedure described in paragraph f., «Engine compartment component disconnection», in reverse order.
f. Connect alternator cooling hose (22) and vacuum servo line (23) to intake manifold.
g. Connect fuel and air intake circuits following the procedures described in paragraphs e. and d., «Engine compartment component disconnection», in reverse order.
h. Install radiator and fan following the procedure described in paragraph c., «Engine compartment component disconnection», in reverse order.
i. Connect cooling circuit lines following the procedure described in paragraph b., «Engine compartment component disconnection» in reverse order.
j. Position battery (1) and associated tray in engine compartment. Secure battery with retainer and connect terminals.
k. Top up fluids and lubricants and carry out adjustments as described in the «Specifications» paragraph of each Group. For **Alfa 90** vehicles, see also «GROUP 00».
l. Hold up hood and install hinge bolts on both sides of vehicle.
m. Install windshield wiper arms and blades.

VIEW OF ENGINE COMPARTMENT ALFETTA 2.0 MOTRONIC (017.13) VEHICLE

Engine compartment components to be removed or disconnected are listed below in numerical order. For further details, see «ENGINE REMOVAL AND INSTALLATION PROCEDURES».

1. Battery
2. Coolant suction hose (radiator/pump)
3. Coolant delivery hose (engine/radiator)
4. Heater return hose
5. Expansion tank/radiator line
6. Expansion tank/cooling circuit line
7. Heater delivery line
8. Vent line
9. Fan control cable
10. Fan supply cable
11. Radiator retaining screw
12. Radiator
13. Fan
14. Air flow sensor cable
15. Clip
16. Intake duct
17. Clips
18. Cover with air flow sensor
19. Fuel delivery line
20. Fuel return line
21. Accelerator cable
22. Alternator cooling hose
23. Vacuum servo line
24. Crankcase vapour line to oil separator
25. Oil vapour recirculation line
26. Separator return line to oil pan
27. HT cable
28. Alternator supply cable
29. Battery charge indicator cable
30. Terminal board
31. Starter supply cable
32. Starter field cable
33. Engine oil pressure indicator cable
34. Valve timing variator cable
35. Electroinjector control cables
36. Coolant temperature sensor cable
37. Coolant temperature gauge cable
38. Coolant temperature indicator light cable
39. Throttle position sending unit cable
40. Auxiliary air cable
41. Ground cable
42. Rev. and timing transducer cables
43. Engine oil level indicator cable
44. Low engine oil pressure indicator cable
45. Heat guard upper retaining screws
46. Engine mount upper retaining screws

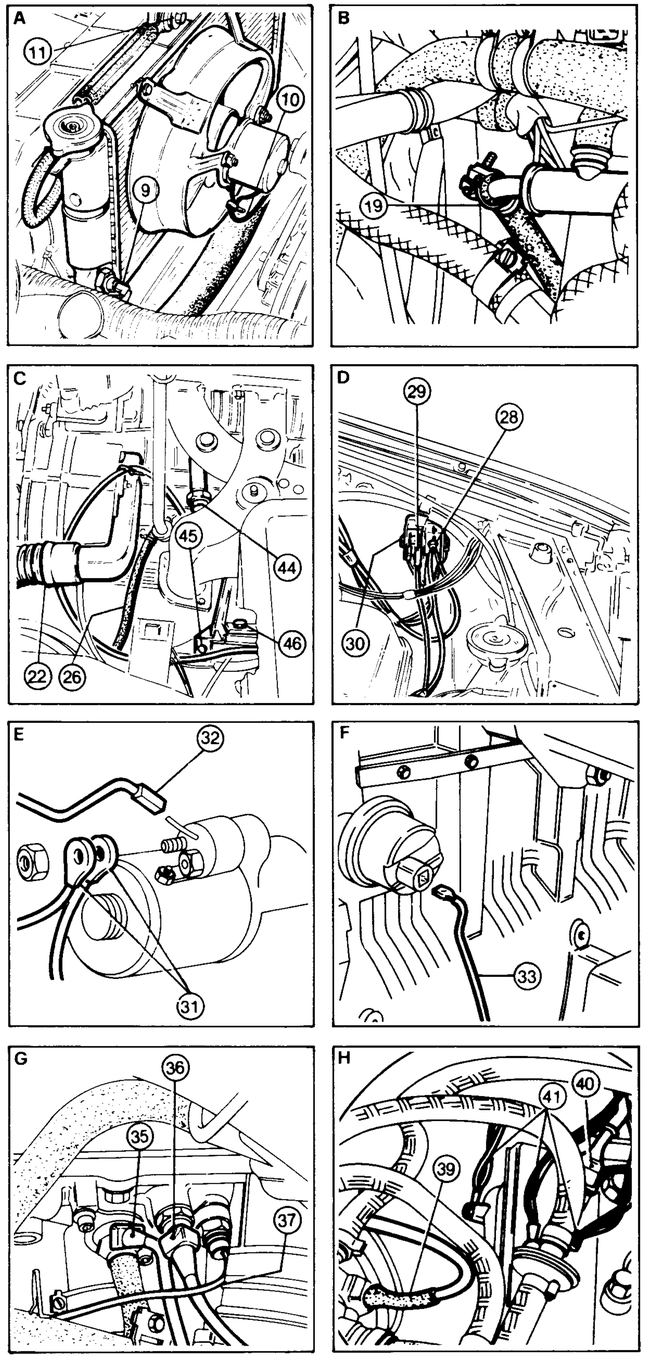

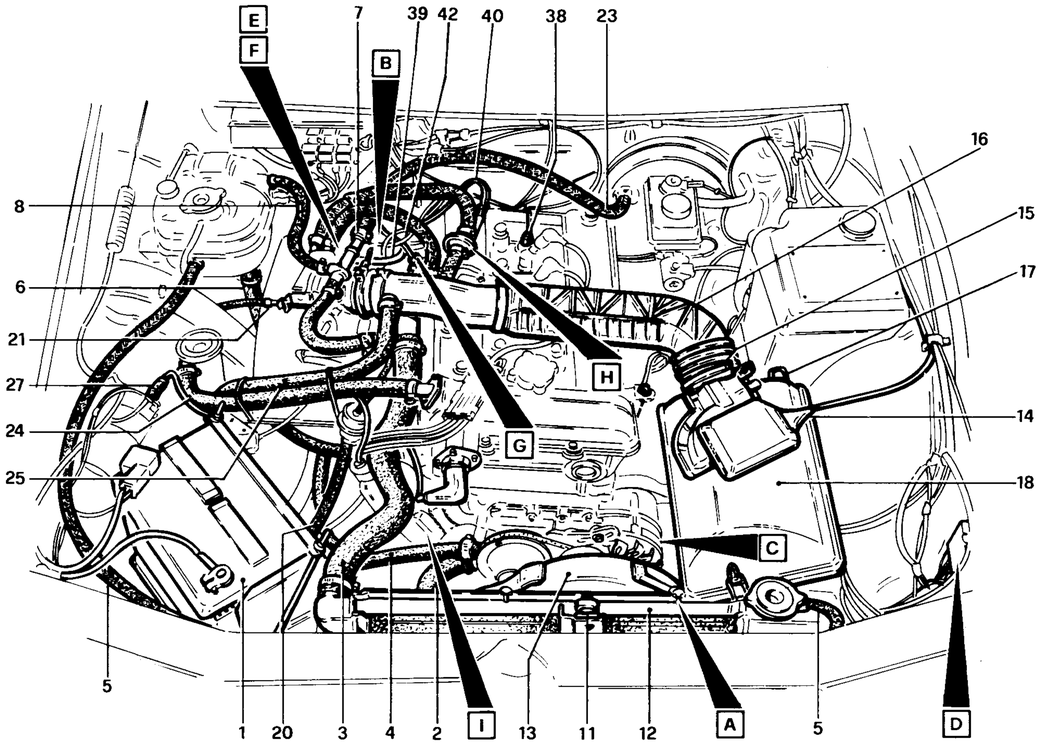

VIEW OF ENGINE COMPARTMENT Alfa 90 2.0 (017.13) (PRE-MODIFICATION VERSION)

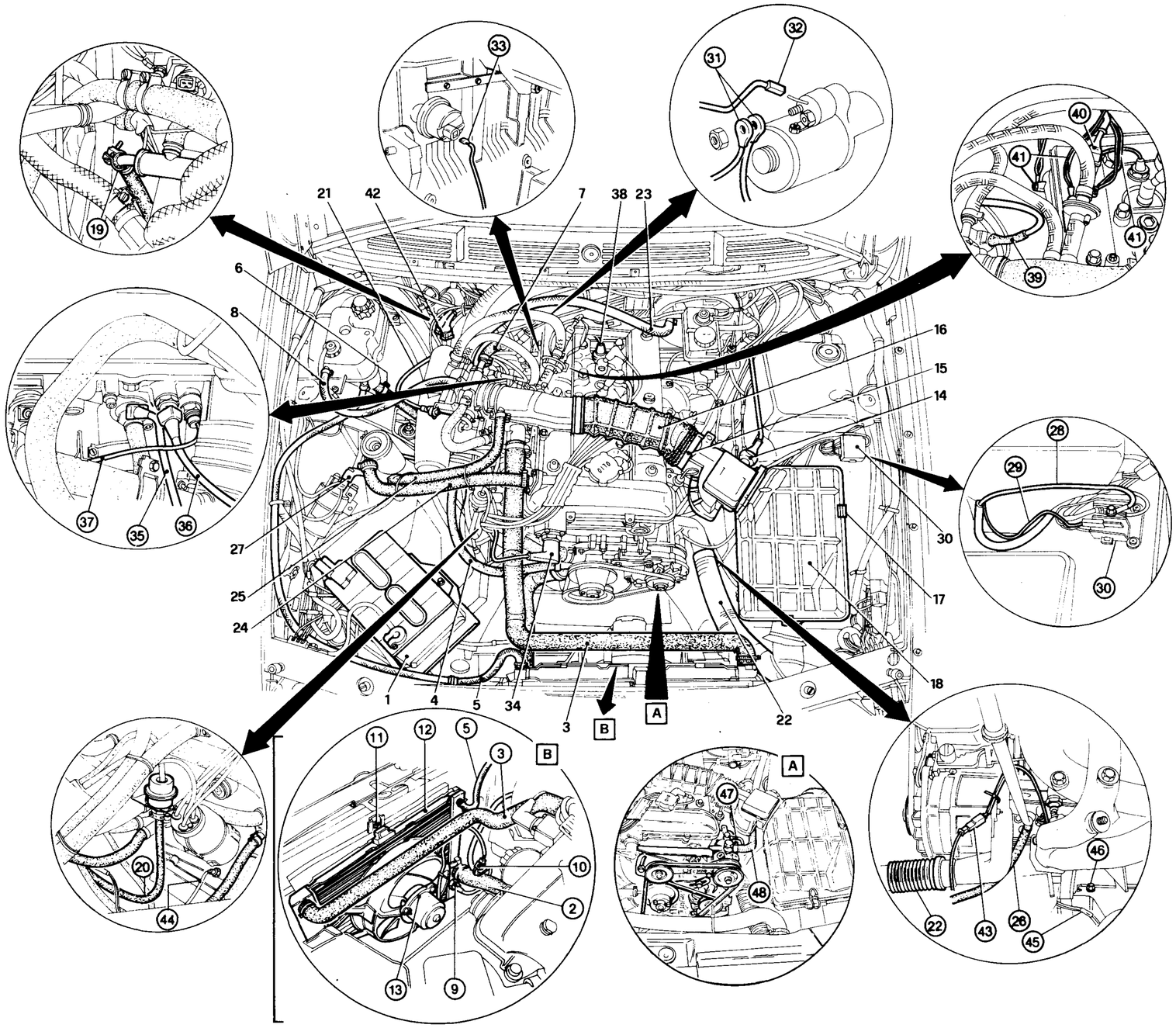

1. Battery
2. Coolant suction hose (radiator/pump)
3. Coolant delivery hose (engine/radiator)
4. Heater return hose
5. Expansion tank/radiator line
6. Expansion tank/cooling circuit line
7. Heat delivery line
8. Vent line
9. Fan control cable
10. Fan supply cable
11. Radiator retaining screw
12. Radiator
13. Fan
14. Air flow sensor cable
15. Clip
16. Intake duct
17. Clips
18. Cover with air flow sensor
19. Fuel delivery line
20. Fuel return line
21. Accelerator cable
22. Alternator cooling hose
23. Vacuum servo line
24. Crankcase vapour line to oil separator
25. Oil vapour recirculation line
26. Separator return line to oil pan
27. HT cable
28. Alternator supply cable
29. Battery charge indicator cable
30. Terminal board
31. Starter supply cable
32. Starter field cable
33. Engine oil pressure indicator cable
34. Valve timing variator cable
35. Electroinjector control cables
36. Coolant temperature sensor cable
37. Coolant temperature gauge cable
38. Coolant temperature indicator light cable
39. Throttle position sending unit cable
40. Auxiliary air cable
41. Ground cable
42. Rev. and timing transducer cables
43. Engine oil level indicator cable
44. Low engine oil pressure indicator cable
45. Heat guard upper retaining screws
46. Engine mount upper retaining screws
47. Steering supply line
48. Steering exhaust line

VIEW OF ENGINE COMPARTMENT Alfa 90 2.0 ✚ (017.13) (POST-MODIFICATION VERSION)

1. Battery
2. Coolant suction hose (radiator/pump)
3. Coolant delivery hose (engine/radiator)
4. Heater return hose
5. Expansion tank/radiator line
6. Expansion tank/cooling circuit line
7. Heat delivery line
8. Vent line
9. Fan control cable
10. Fan supply cable
11. Radiator retaining screw
12. Radiator
13. Fan
14. Air flow sensor cable
15. Clip
16. Intake duct
17. Clips
18. Cover with air flow sensor
19. Fuel delivery line
20. Fuel return line
21. Accelerator cable
22. Alternator cooling hose
23. Vacuum servo line
24. Crankcase vapour line to oil separator
25. Oil vapour recirculation line
26. Separator return line to oil pan
27. HT cable
28. Alternator supply cable
29. Battery charge indicator cable
30. Terminal board
31. Starter supply cable
32. Starter field cable
33. Engine oil pressure indicator cable
34. Valve timing variator cable
35. Electroinjector control cables
36. Coolant temperature sensor cable
37. Coolant temperature gauge cable
38. Coolant temperature indicator light cable
39. Throttle position sending unit cable
40. Auxiliary air cable
41. Ground cable
42. Rev. and timing transducer cables
43. Engine oil level indicator cable
44. Low engine oil pressure indicator cable
45. Heat guard upper retaining screws
46. Engine mount upper retaining screws
47. Steering supply line
48. Steering exhaust line
49. Air weighing extension

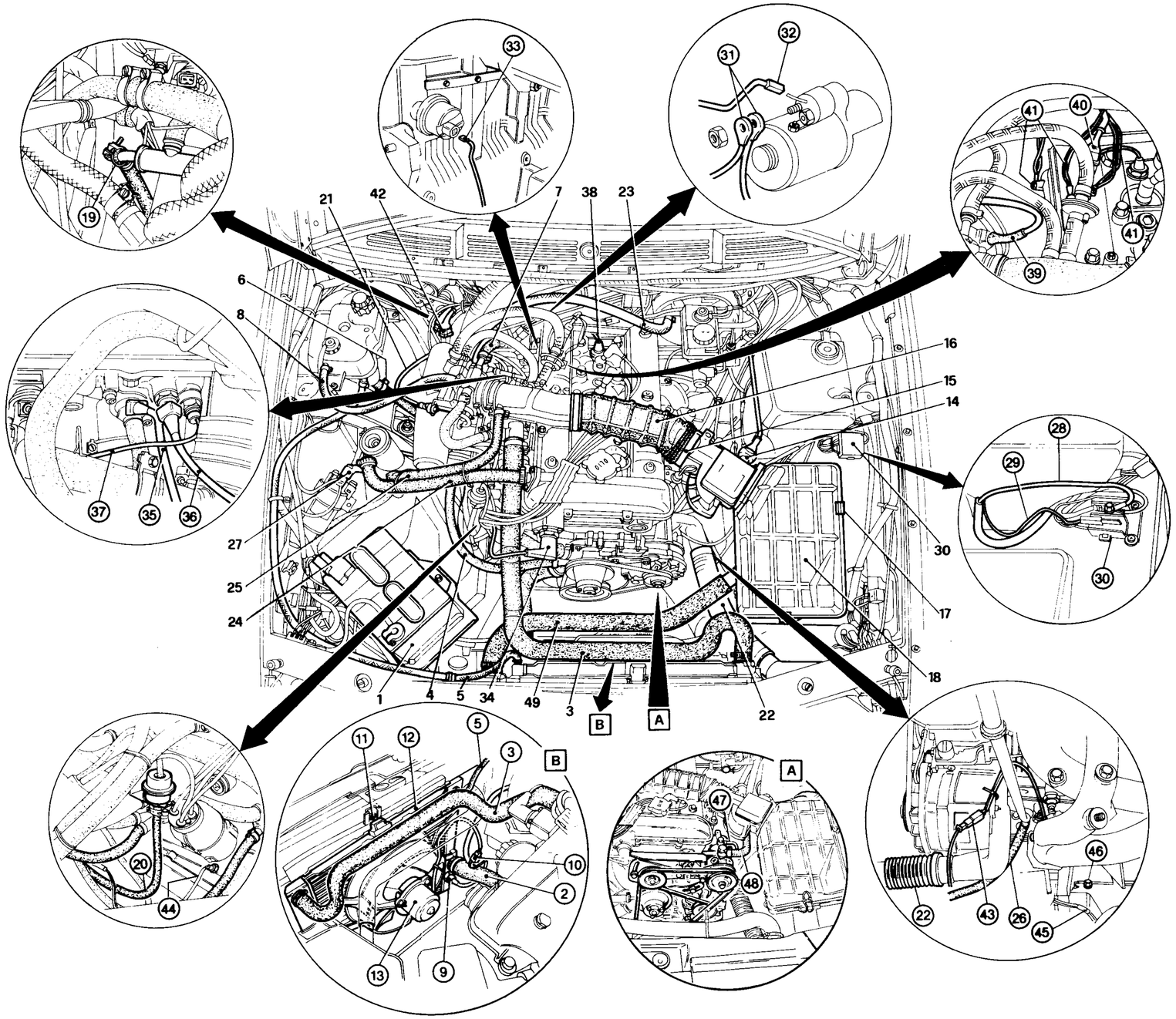

ENGINE REMOVAL ALFETTA GTV 2.0 VEHICLE

PRELIMINARY OPERATIONS

a. Place the vehicle over a garage lift and chock front wheels. Open hood and secure in open position with associated strut (1) located on L.H. side of vehicle.

L.H. SIDE OF VEHICLE

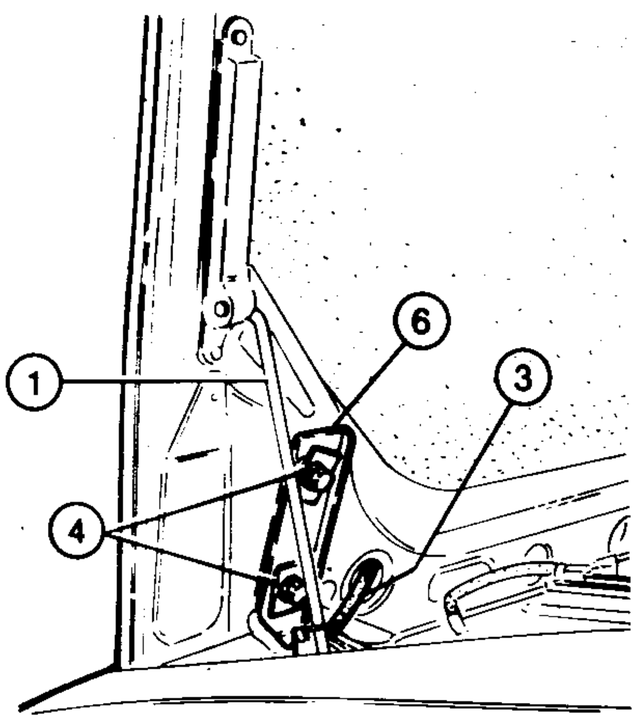

1. Strut

CAUTION:
When the engine is hot, proceed with caution to avoid burns.

b. Disconnect engine compartment light supply cable (1) and ground cable (2) on R.H. side of vehicle.
c. Remove windshield washer hose (3) from associated reservoir on L.H. side of vehicle.
d. Support hood and remove screws (4) and associated shims (5) which retain hood to hinges (6). Retrieve shims, which must be replaced in the same positions upon hood installation to ensure correct centralization.
e. Remove hood and protect contact areas with suitable soft materials.

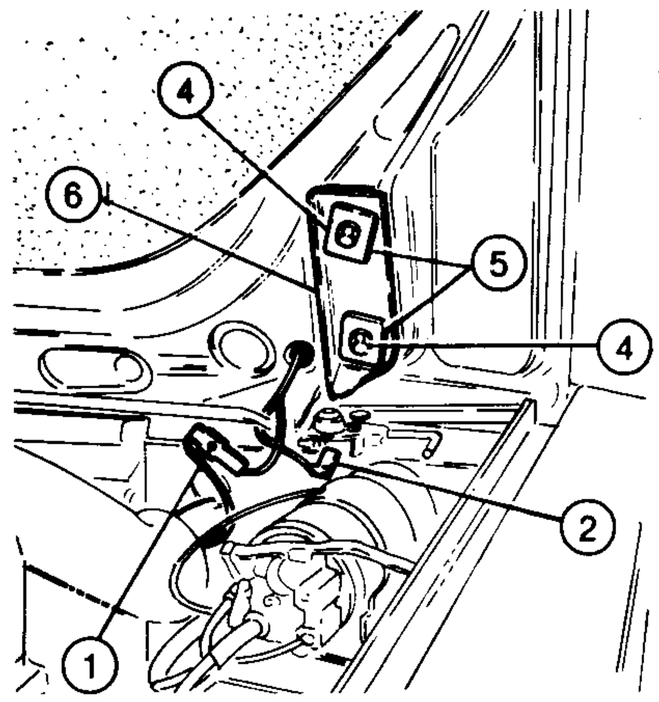

R.H. SIDE OF VEHICLE

1. Engine compartment light supply cable
2. Ground cable
3. Windshield washer hose
4. Screws
5. Shims
6. Hood hinge

ENGINE COMPARTMENT COMPONENT DISCONNECTION

For location of parts identified by reference numbers below, see the view of the engine compartment for the vehicle in question.

a. Disconnect positive and negative cables from battery (1). Disconnect the battery tie rods and lift out battery complete with tray.
b. **Intake system disconnection**: follow the procedure described for Alfetta and Giulietta vehicles.
c. **Cooling circuit disconnection**: follow the procedure described for Alfetta and Giulietta vehicles, with the following variations:
— Disconnect expansion tank/thermostat line (13)A from thermostat unit.
— Disconnect expansion tank/radiator line (13)B from radiator.
d. **Radiator removal**: follow the procedure described for Alfetta and Giulietta vehicles.
e. Detach corrugated alternator cooling hose (19) from air intake and from seat on alternator. Remove hose.
f. Disconnect vacuum servo line (20) from intake manifold.
g. **Accelerator and choke cable disconnection**: follow the procedure described for Alfetta and Giulietta vehicles.
h. **Disconnect the following electrical cables** and remove, preferably as indicated.
— HT cable (26) from ignition coil
— LT cable (27) from distributor.
— Supply (28) and field (29) cables from starter.
— Low oil pressure indicator cable (30) from sending unit on engine block.
— Coolant temperature gauge cable (31) from sensor on thermostat unit.
— High coolant temperature indicator cable (32) from sending unit on engine block.
— Alternator supply and battery charge indicator cables (33) from terminal board (34) on vehicle L.H. side panel.

Release cables from any clips and arrange so they will not interfere with engine removal.

i. Remove two screws (35) retaining heat guard (36) on L.H. engine mount.
j. Remove upper retaining screws (37) from both side engine mounts.

UNDERBODY COMPONENT DISCONNECTION

Follow procedure described in paragraphs a. through h. for standard Alfetta and Giulietta vehicles.
For location of parts, see view of underbody, Alfetta and Giulietta vehicles.

ENGINE INSTALLATION ALFETTA GTV 2.0 VEHICLE

UNDERBODY COMPONENT INSTALLATION

Follow procedure described in paragraphs a. through j. for standard Alfetta and Giulietta vehicles. For location of parts, see view of underbody, Alfetta and Giulietta vehicles.

ENGINE COMPARTMENT CONNECTIONS

For location of parts identified by reference numbers below, see view of engine compartment for the vehicle in question.

a. Lower vehicle and secure top of heat guard (36) through screws (35).

b. Secure top of engine mounts to crossmember through screws (37).

c. Restore all electrical connections. To do so, follows the procedure described in paragraph h., «Engine compartment disconnection», in reverse order.

d. Connect accelerator and choke cables by following the procedure described in paragraph j., «Alfetta and Giulietta vehicles», in reverse order.

e. Connect vacuum servo line (20) to intake manifold.

f. Connect alternator cooling hose (19) to air intake and seat on alternator.

g. Install radiator and fan by following the procedure described in paragraph d., «Alfetta and Giulietta vehicles», in reverse order.

h. Connect cooling circuit lines by following the procedures described in paragraph c., «Alfetta and Giulietta vehicles» with the following variations:

— Connect expansion tank/radiator line (13)B to radiator.

— Connect expansion tank/thermostat line (13)A to thermostat unit.

i. Connect air cleaner cover (5) with filter element and secure through clips (4). Connect intake system by following the procedure described in paragraph b., «Alfetta and Giulietta vehicles» in reverse order.

j. Position battery (1) and associated tray in engine compartment. Secure battery with retainer and connect terminals.

k. Top up fluids and lubricants and carry out adjustments as described under «Fluids, lubricants and adjustments».

l. Install hood by following the procedure described in «Preliminary operations» in reverse order.

VIEW OF ENGINE COMPARTMENT ALFETTA GTV 2.0 VEHICLE

Engine compartment components to be removed or disconnected are listed below in numerical order. For further details, see «ENGINE REMOVAL AND INSTALLATION PROCEDURES».

1. Battery
2. Clamp
3. Hot air intake hose
4. Clips
5. Air cleaner cover
6. Fuel line (filter to carburetters)
7. Fuel delivery line
8. Fuel suction line
9. Coolant suction hose (radiator to pump)
10. Coolant delivery hose (thermostat to radiator)
11. Heater return line
12. Heater delivery line
13. Expansion tank line
13A. Expansion tank/thermostat line
13B. Expansion tank/radiator line
14. Fan control cable
15. Fan supply cable
16. Radiator retaining screw
17. Radiator
18. Fan
19. Corrugated hose
20. Vacuum servo line
21. Accelerator cable detent
22. Accelerator cable
23. Choke cable retaining screw
24. Choke cable
25. Sheath retaining screw
26. HT cable
27. LT cable
28. Starter supply cable
29. Starter field cable
30. Engine oil pressure indicator cable
31. Coolant temperature gauge cable
32. Coolant temperature indicator light cable
33. Alternator supply and battery charge indicator cables
34. Terminal board
35. Heat guard upper retaining screws
36. Heat guard
37. Engine mount upper retaining screws

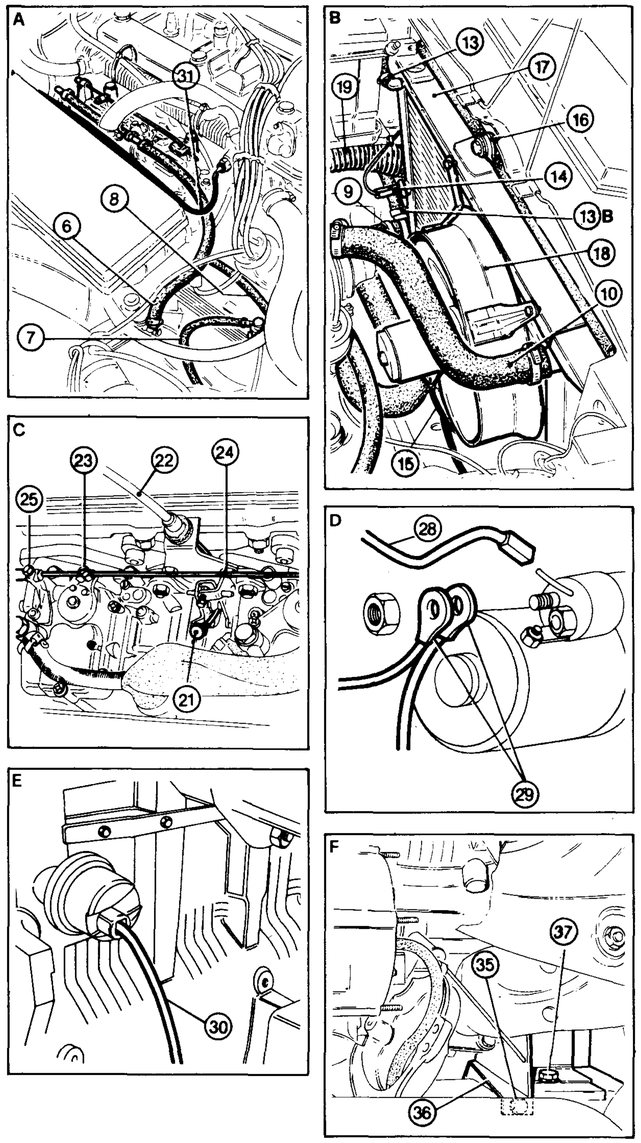

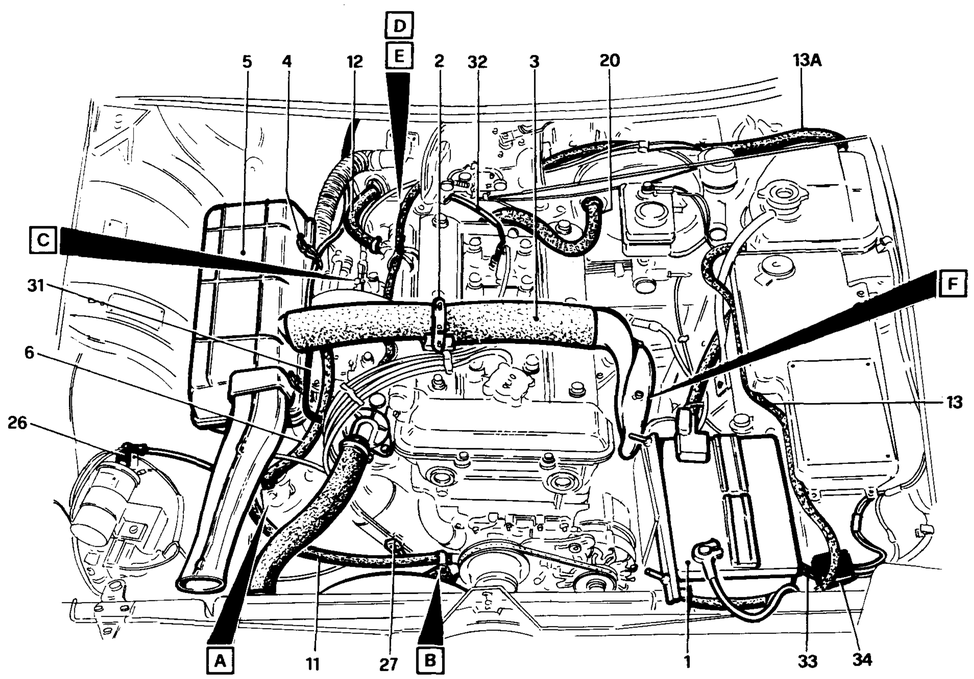

ENGINE REMOVAL AND INSTALLATION

Alfa 75 1.8 turbo

FOREWORD

This section contains all the data and procedures relating to the removal and installation of the engine fitted on the following Alfa Romeo vehicle:

Alfa 75 1.8 turbo

Given that the operations involved in removing and installing the engine are somewhat numerous, the operator is urged to read the intervention procedures carefully and to examine with care the illustration of the assembly that give an indispensable but of course incomplete overall view of the engine.

Following the above advice permits the correct operational techniques to be acquired and familiarizes the technician with the technical data, and caution and warning captions.

Location of engine supports

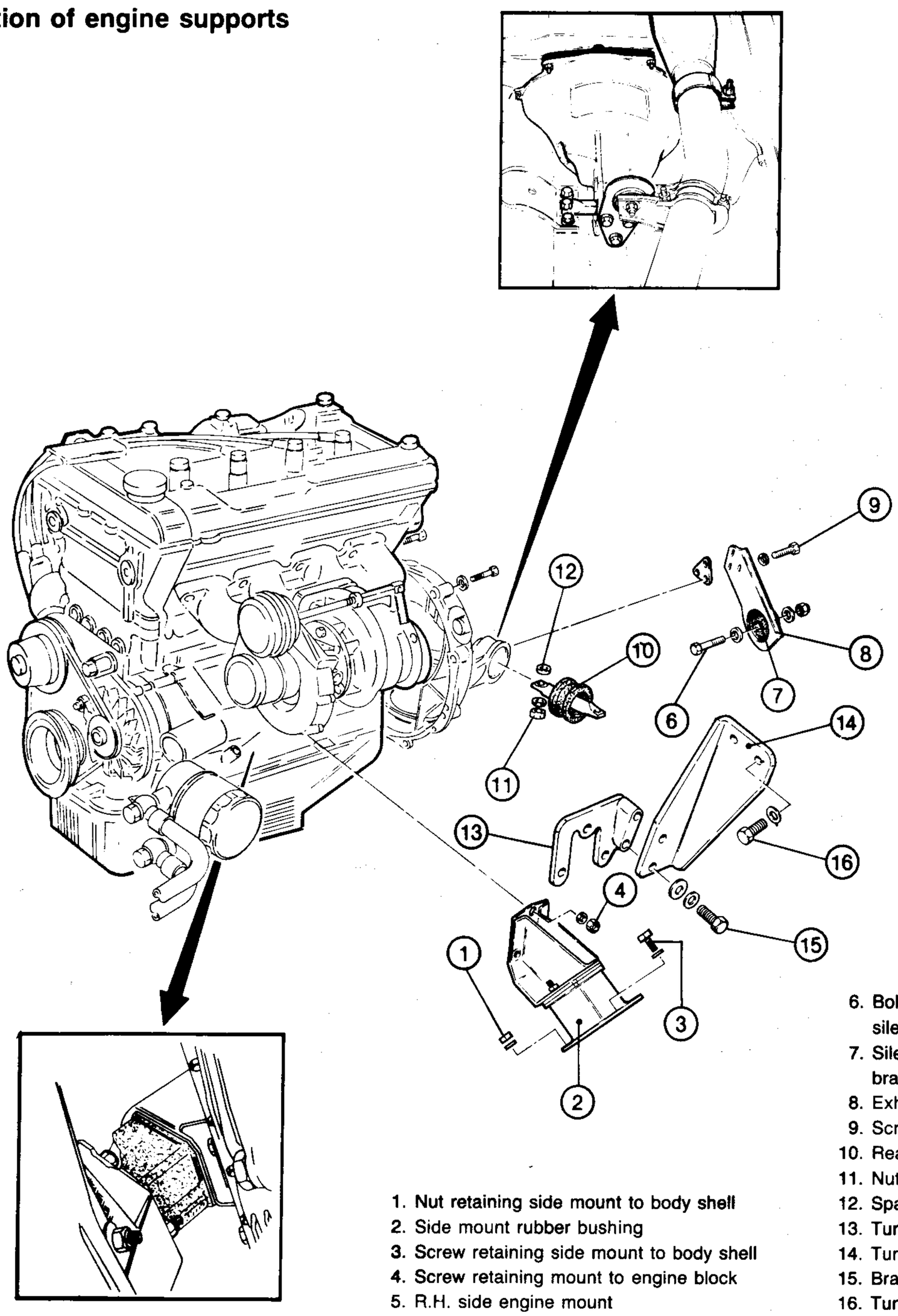

1. Nut retaining side mount to body shell
2. Side mount rubber bushing
3. Screw retaining side mount to body shell
4. Screw retaining mount to engine block
5. R.H. side engine mount
6. Bolt retaining exhaust pipe bracket to silentbloc
7. Silentbloc for exhaust pipe support bracket
8. Exhaust pipe support bracket
9. Screw retaining bracket to flywheel cover
10. Rear mount
11. Nut retaining rear mout to the body shell
12. Spacer
13. Turbocharger bracket support
14. Turbocharger bracket
15. Bracket retaining screw
16. Turbocharger retaining screw

REMOVAL

1. Preliminary operations

a. Place vehicle on lift platform and chock wheels.

CAUTION:
When the engine is hot, proceed with caution to avoid burns.

b. Open hood and secure in open position with associated strut (1).
Remove hinge bolts (2) and lay hood back in fully open position.

CAUTION:
Protect contact points with suitable soft materials.

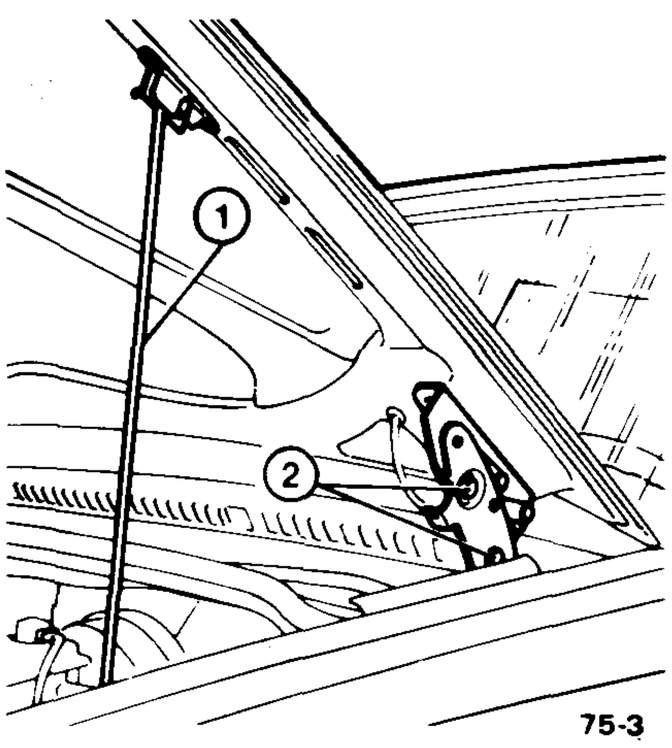

1. Strut
2. Bolts

CAUTION:
For maximum safety, the hood should be secured in the open position to prevent it from falling suddenly.

For location of parts identified by reference numbers below, see the view of the engine compartment for the vehicle in question.

c. Disconnect positive «+» and negative «—» terminals from battery (1).
d. Slacken screw (2) retaining intercooler air intake (3) and battery bracket (4) (see detail **A**).
e. Disconnect power brake vacuum servo line (5) from the intercooler union, loosening the relative clamp (see detail **E**).
f. Unscrew the four screws (7) retaining air intake duct to the front panel of the body shell.
Remove air intake duct (3), complete with sleeve (8), withdrawing it from intercooler (9) (see detail **A**).

2. Air supply system removal

a. Disconnect from the supercharging pressure control solenoid valve (10) the following components (see detail **B**):
— *connector* (11) *for solenoid valve supply* cable;
— hose (12) to oil vapor sedimenter;
— pressure line (13) from the turbocharger compressor;
— hose (14) to *overpressure valve* (Waste-Gate).
b. If necessary remove solenoid valve (10) from the air filter cover, unscrewing two nuts with washers (15).
c. Disconnect union (16) from air flow meter (17).
d. Unscrew upper screw (18) retaining air intake duct bracket to air flow meter.
e. Slacken the two clamps (19) retaining air intake duct to air flow meter.
f. Release clips (20) securing air filter cover (21) and remove it together with air flow meter (17), withdrawing it from the air intake duct.
g. Remove filtering element and, if necessary, unscrew the two nuts and the screw securing the air filter casing to the body and remove it.
h. Slacken clamp (22) securing air intake duct (23) to turbocharger compressor inlet (see detail **C**).
i. Slacken clamp (24) securing oil vapour exhaust hose to the oil vapour sedimenter and remove air intake duct (23), withdrawing it from the turbocharger compressor inlet.

WARNNG:
Plug the turbocharger compressor inlet so as to prevent any foreign matter from entering.

3. Coolant lines and radiator

a. Disconnect the following pipes and hoses, removing them preferably from the end indicated:
— slacken clamp (25) and remove coolant return sleeve (26) from the thermostat;
— slacken the clamp and remove coolant delivery sleve (27) from the water pump (see detail **D**);

NOTE:
Place a suitable container under the vehicle to collect drained coolant.

— slacken the clamp and remove heater coolant return hose (28) from the water pump (see detail **D**);
— slacken the clamp and remove radiator delivery line (29) from tee (see detail **D**);
— slacken the clamp and remove breather line (30) from the radiator (see detail **D**);
— slacken the clamp and remove cooling system breather line (31) from union on cylinder head (see detail **E**);
— slacken the clamp and remove heater coolant delivery line (32) from union on cylinder head (see detail **E**).
b. Disconnect fan control cable (33) from the temperature switch on the lower right part of the radiator (see detail **F**).
c. Disconnect fan supply cable (34) from in-line connection (see detail **F**).
d. Remove screw (35) retaining radiator (36) to front of body steel and remove it together with the fan.

4. Removal of fuel system

WARNING:

- **Proceed with caution: the supply system may be under pressure.**
- **Keep tubing pointing upwards to prevent fuel escaping.**
  Ensure also, that the workshop is correctly equipped to enable operations to be performed safely.

a. Disconnect fuel return hose from lower part of pressure regulator (37).
b. Slacken the nut and disconnect fuel delivery line (38) from the lower part of hammering damper (39) (see detail **G**).

CAUTION:
There may be residual pressure between fuel pump and hammering damper which could cause petrol to spray out; plug disconnected hose (38).

5. Accelerator cable disconnection

a. Slacken the three retaining screws and remove accelerator control protection plate (40).
b. Rotate fully, anticlockwise, accelerator control cam (41) and withdraw the pawl of control cable (42) from the end of the cam (see detail **H**).
c. Withdraw accelerator control cable (42) from support bracket (43), withdrawing it from the bottom (see detail **H**).

6. Oil cooling system removal

a. Unscrew union (44) and disconnect oil delivery hose (45) to cooling radiator (see detail **I**).
b. Unscrew union (46) and disconnect oil return hose (47) from cooling radiator (see detail **I**).

NOTE:
Place a suitable container under the vehicle to collect any oil leakage.

7. Electrical cable disconnection

a. Disconnect the following electrical cables and remove as indicated:

- supercharging pressure sender cable (6) from manifold on intercooler;
- HT cable (48) from ignition coil;
- throttle position sending unit cable (49) from mobile connection (see detail **H**);
- minimum cut-out switch (50) cables from relative switch (see detail **H**);
- supply cables (51) and ground cables (52) from auxiliary air solenoid (see detail **E**);
- air intake manifold ground cables (52)A from the right side of cylinder head (see detail **E**);
- maximum coolant temperature cable (53) from thermal switch on the cylinder block (see detail **E**);
- Hall effect cable (54) from distributor (see detail **D**);
- alternator supply (56) and warning light (57) cables from terminal board (58) on engine compartment left valance panel (see detail **L**);
- engine oil pressure indicator cable (59) from bulb on right side of engine block (see detail **M**);
- engine oil minimum pressure indicator light cable (60) from transmitter on oil filter support (see detail **N**), or from mobile connection (61) near alternator (see detail **C**);
- engine oil minimum pressure indicator light cable (55) from transmitter on R.H. side of engine block, under the distributor (see detail **D**);
- coolant temperature indicator cable (62), from bulb on cylinder head, under intake manifold (see detail **O**);
- coolant temperature sensor cable (63) from transmitter on cylinder head, under intake manifold (see detail **O**);
- pulse sensor cable (64) from relative connector on cylinder head, under intake manifold (see detail **M**);
- electro-injector feed cables (65) from respective connectors (see detail **O**);
- feed (66) and energizing cables (67) from starting motor on R.H. side of rear cover (see detail **O**).

NOTE:
Release the electrical cables from any clips and arrange so that they will not interfere with engine removal.

8. Final operations

a. Remove the three screws (68) securing heat guard (69) to brake/clutch system pump and remove heat guard.
b. Slacken and remove bolt (70) securing collar (71); this collar joins turbocharger exhaust gas union to the exhaust pipe (see detail **P**).
c. Slacken (but do not remove), on both sides, screws (72) fixing the upper part of the engine side mounts to the body steel (see detail **P**).
d. Remove heat guard (73) from L.H. side mount (see detail **P**).

For the following steps see the figure «View of underbody».

9. Oil discharge
(if required by the operations to be performed)

a. Raise the vehicle on the garage lift.
b. Unscrew plug (1) and drain engine oil.
Screw plug on again after the job has been completed.

10. Exhaust pipe removal

a. Slacken nut (2) securing clamp (3) connecting exhaust pipe front and centre sections (see detail **A**).
b. Separate front section (4) from centre section and from turbocharger exhaust gas union.
c. Remove the three screws (5) securing bracket (6) to end of flywheel cover (see detail **A**).
d. Slacken nut (7) securing clamp (8)

connecting centre section (9) of exhaust pipe and tail pipe (10) (see detail **B**).
e. Free centre section (9) from rubber support rings (11), and withdraw from tail pipe to remove.

11. Propeller shaft removal

a. Remove centre cross member (12) after removing screws (13) securing it to the body shell.
b. Slide off boot (14), unscrew and remove bolt (15) and disconnect gear selector rod (16) (see detail **C**).
If necessary, remove screws (17) securing gear lever support (18) and move it to permit the removal of the propeller shaft (see detail **C**).
c. Slacken bolts (19) and remove flywheel guard (20),
d. With gearbox in neutral, rotate propeller shaft (21), alternately slackening nuts (22) and bolts (23) securing it, respectively, to the flywheel and to the clutch yoke (see details **D** and **E**).
e. Remove the two screws (24) and disconnect pin (25) of engine rear mount from the body shell (see detail **A**).
f. Slacken the two nuts (26) and disconnect propeller shaft centre support (27) from the body shell (see detail **C**).
g. Remove the six screws (28) securing rear cross member (29) to body shell and remove it.
h. Raise the rear axle using a column lift provided with cradle **A.2.0075** and then extract propeller shaft from the clutch yoke.

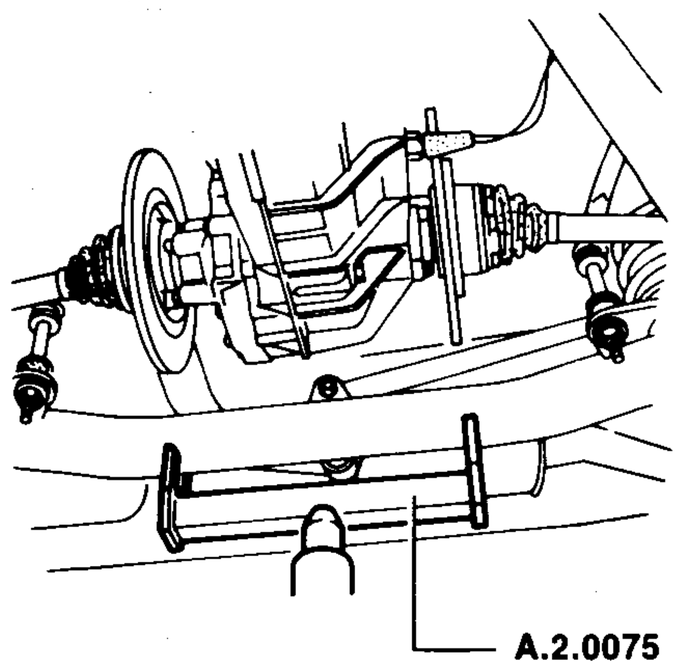

i. Lower the column lift and remove the propeller shaft.

12. Final operations

a. Remove the screw from the body steel and disconnet the ground cable (30).
b. Fit a suitable operating lever on the engine rear support to aid engine removal operations.
c. Slacken and remove lower nuts (31) retaining side engine mounts (32) (see detail **F**).
d. Lower garage lift and then unscrew and remove upper screws (33) retaining side mounts (32) (see detail **F**).
Raise the garage lift.
e. Hook a suitable hydraulic lift to engine lift bracket.
Activate lift and raise engine while tilting with a suitable lever.

NOTE:
If necessary, disconnect center spark plug cables and remove spark plug.

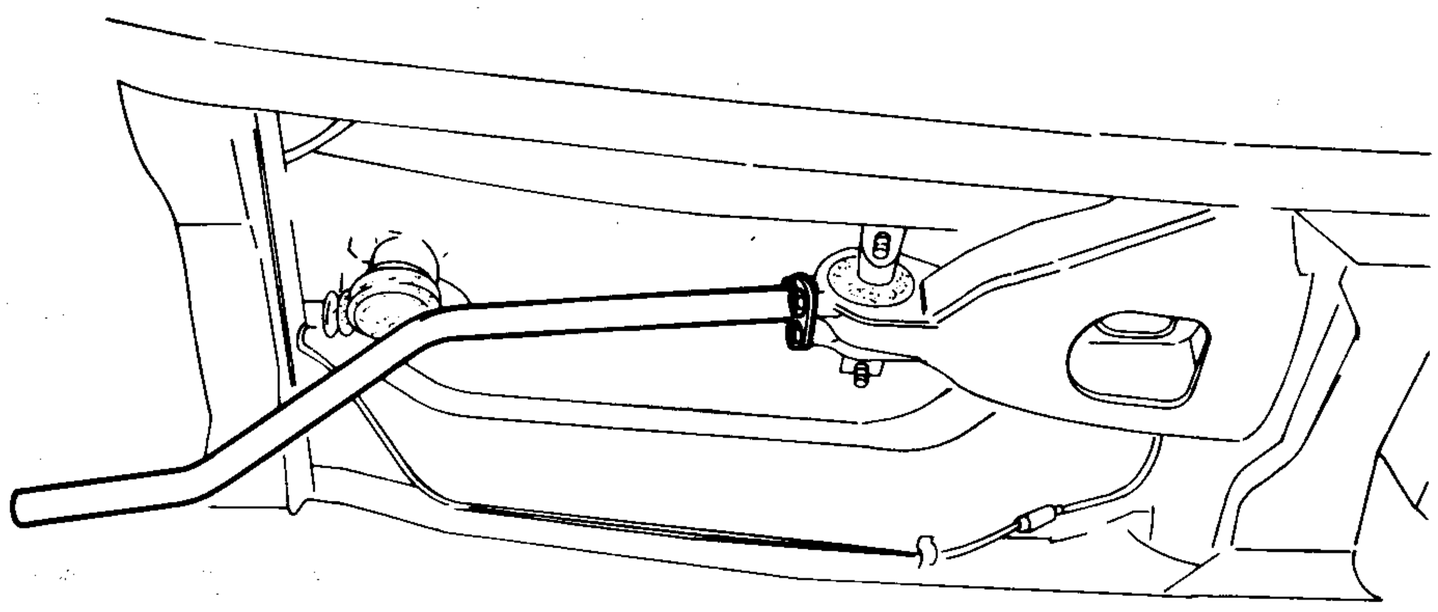

INSTALLATION

For the following operations refer to bottom view of vehicle in question.

1. Preliminary operations

a. Install service handle on rear engine mount.

b. Fasten engine to lifting bracket and, using a suitable hoist, lower powerplant slowly in engine compartment guiding it with the service handle.

c. Centralize engine in engine compartment over the two side mounts and ensure that holes for screws and studs are correctly aligned on both mounts.

d. Start and tighten screws (33) retaining cushion mounts to body on both sides.

e. Raise vehicle, start and tighten nuts (31) retaining mounts to body at bottom on both sides.

f. Remove service handle from rear engine mount.

g. Connect ground cable (30) to body steel and tighten the relative screws.

2. Install the propeller shaft group

a. Install the propeller shaft group by following the removal procedures in reverse order («Removal» step 11.) and noting the points below:

— **Lubricate** shaft front bushing and rear joint spherical seat using **5 cm³ (0.2 fl·oz)** of **ISECO MOLYKOTE BR2** grease.
  If necessary lubricate the flywheel bushings with the same grease.

— Restrain shaft by suitable means and tighten nuts (22) and bolts (23) of flex. couplings each in turn to the specified torque.

(T) : **Tightening torque**
Nuts and bolts retaining shaft flex. couplings to flywheel and clutch fork
55 to 57 N·m
(5.6 to 5.8 kg·m
40.6 to 42.0 ft·lb)

CAUTION:
When assembling use new self-locking nuts.

— Tighten nuts (26) retaining center bearing (27) to underbody.

(T) : **Tightening torque**
Center bearing nuts
93 to 103 N·m
(9.5 to 10.5 kg·m
6.6 to 76.0 ft·lb)

b. Fix pin (25) or engine rear support using the two screws (24).

c. Assemble flywheel guard (20) and tighten bolts (19).

d. Re-connect rod (16) to the gearlever with bolt (15) and slide on boot (14).

(T) : **Tightening torque**
Nut retaining gear control rod to rear lever
13 to 16 N·m
(1.3 to 1.6 kg·m
9.4 to 11.6 ft·lb)

e. Secure crossmember (12) to body shell using screws (13).

f. Tighten transmission unit crossmember (29) to body capscrews (28) to the specified torque.

(T) : **Tightening torque**
Transmission unit crossmember to body capscrews
39 to 44 N·m
(4.0 to 4.5 kg·m
28.8 to 32.5 ft·lb)

g. Check the specified distance «A» between the propeller shaft and rear engine support.

Distance «A» between the propeller shaft and rear engine support
A = 7 mm (0.28 in)

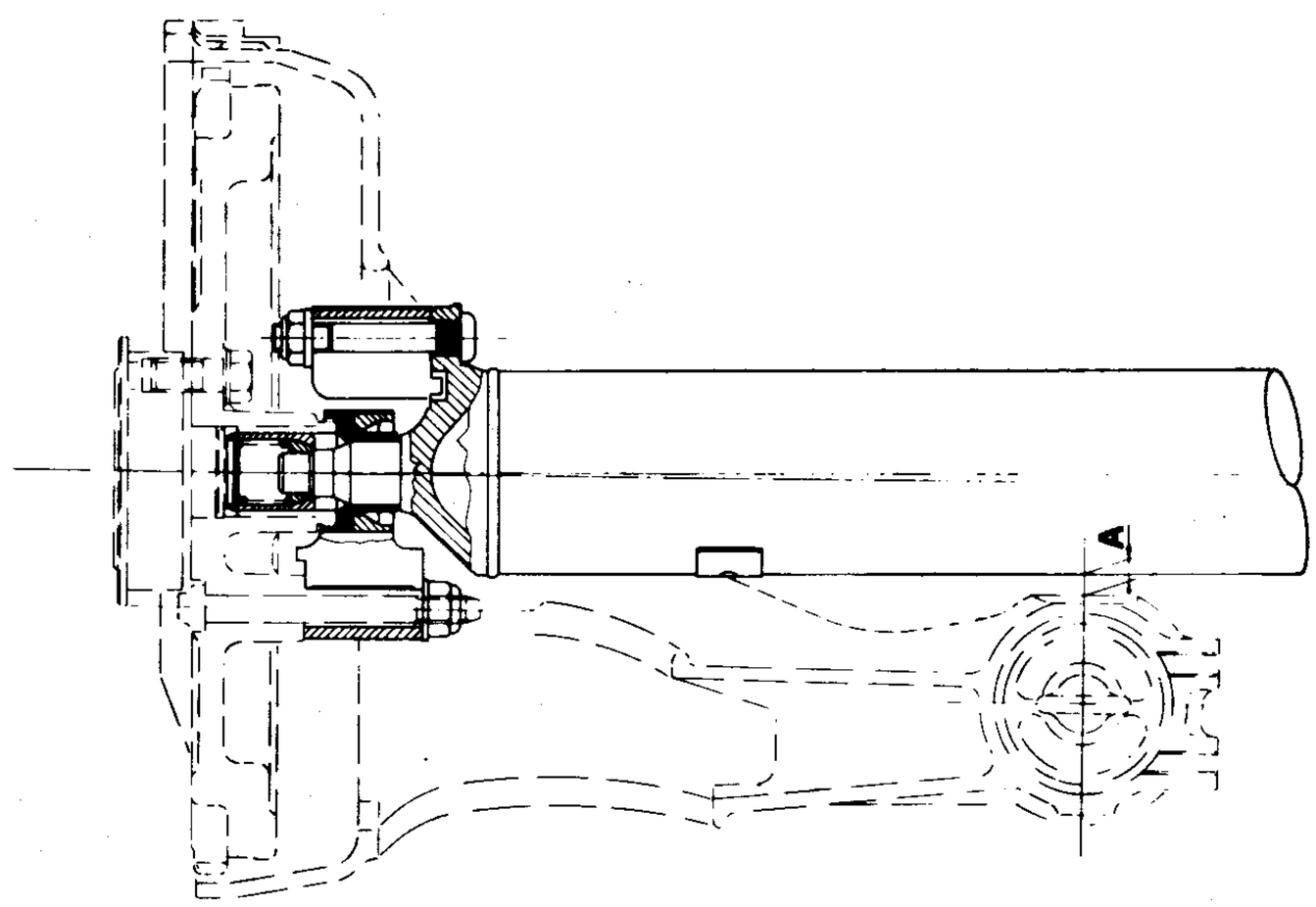

h. If this distance differs from the specified one, vary the length of the spacers (1) placed between the rear engine support (2) and the body accordingly.

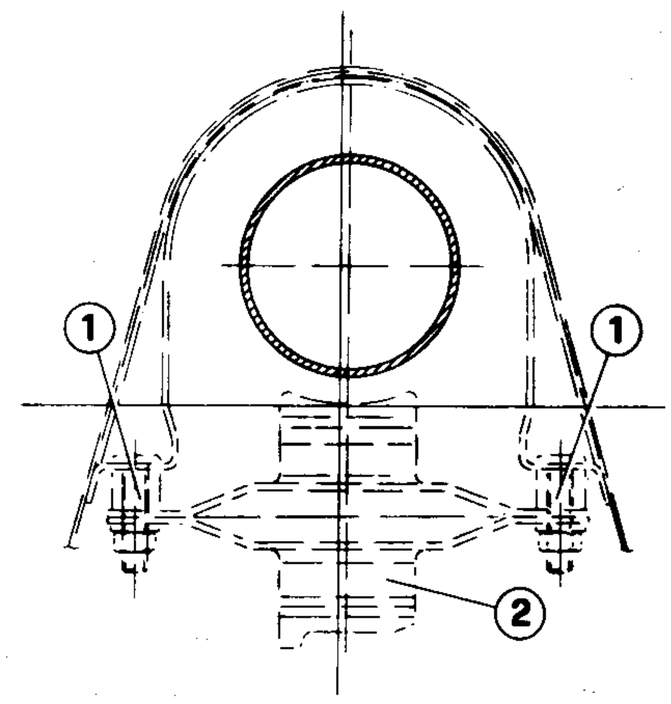

1. Spacer
2. Rear engine support

3. Exhaust pipe installation

a. Place centre section (9) of the exhaust pipe on rubber support rings (11).

b. Connect centre section (9) of the exhaust pipe to tail pipe (10) without tightening the nut (7) on clamp (8).

c. Connect centre section (9) of the exhaust pipe to the front section (4) without tightening the nut (2) on clamp (3).

d. Tighten screws (5) securing bracket (6) to the end of the flywheel cover.
e. Rock exhaust pipe to obtain proper alignment.
f. Tighten fully nuts (2) and (7) securing clamps (3) and (8) respectively.

In order to follow the following steps of the procedure consult the figure «View of the Engine Compartment» of the vehicle in question.

4. Installation of radiator
Refit radiator together with electric fan, then reconnect cooling system tubing by reversing the order of the procedure described in «Removal» step 3.

5. Air filter installation
Assemble the air filter and then re-connect the air supply hoses by following the procedures described in «Removal» step 2. in reverse order.

6. Fuel supply system
Assemble the fuel supply system by following the procedures described in «Removal» step 4. in reverse order.

7. Accelerator cable
Connect accelerator cable adopting a reversal of the «Removal» sequence, step 5.

8. Oil cooling system
Restore the oil cooling circuit by following the procedures described in «Removal» step 6. in reverse order.

9. Electrical connections
Restore electrical connection, reversing the order of the procedure described in «Removal» step 7.

10. Final operations
a. Assemble heat guard (69) on the brake/clutch system pump by tightening the three screws (68).
b. Tighten bolt (70) securing collar (71) joining turbocharger exhaust gas union to the front section of the exhaust pipe.
c. Re-connect servobrake vacuum intake hose (5) to the union on intercooler.
d. Re-connect hose (6) from turbocharger pressure gauge to the union on the intercooler.
e. Assemble air intake duct (3), complete with sleeve (8), to intercooler (9) and fix it to the front body shell panel using the four screws (7).
f. Place battery (1) in engine compartment and secure with bracket (4); secure bracket and air intake duct support using screws (2) and then re-connect battery terminals.
g. For references and adjustments see specifications of appropriate groups.
h. Release hood, prop up and install hinge bolts on both sides of vehicle.

VIEW OF ENGINE COMPARTMENT Alfa 75 1.8 turbo

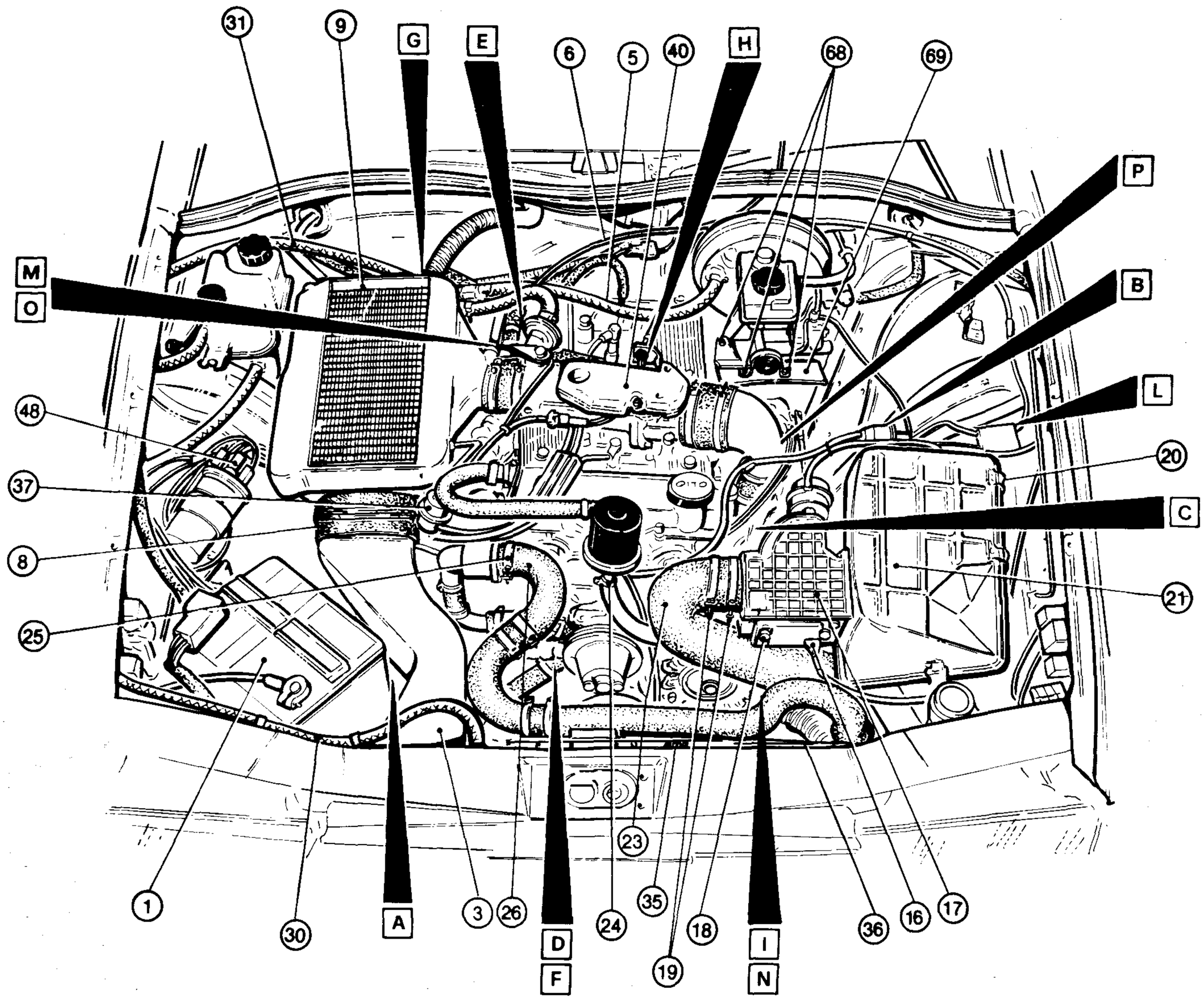

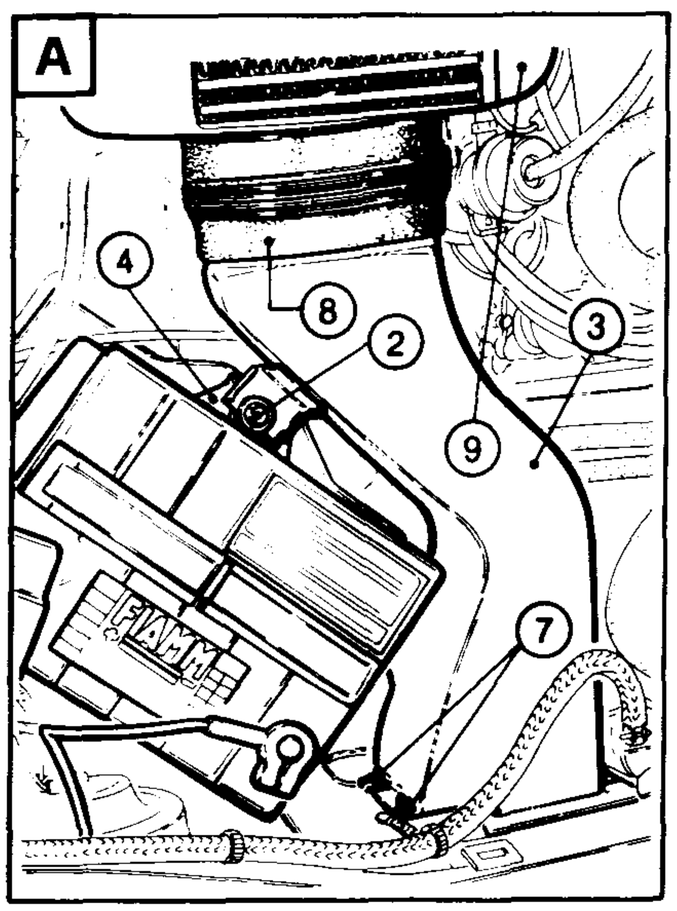

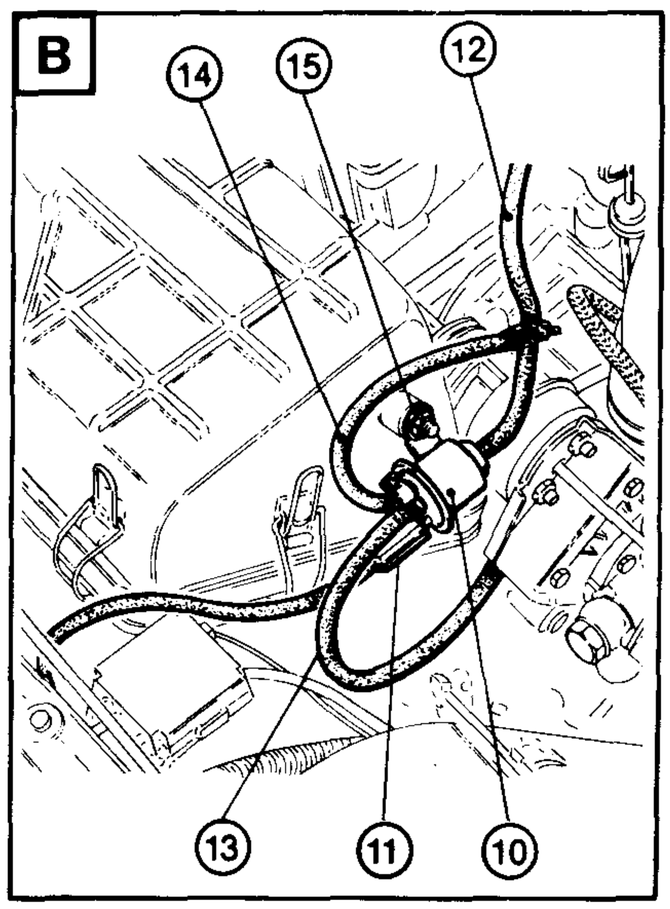

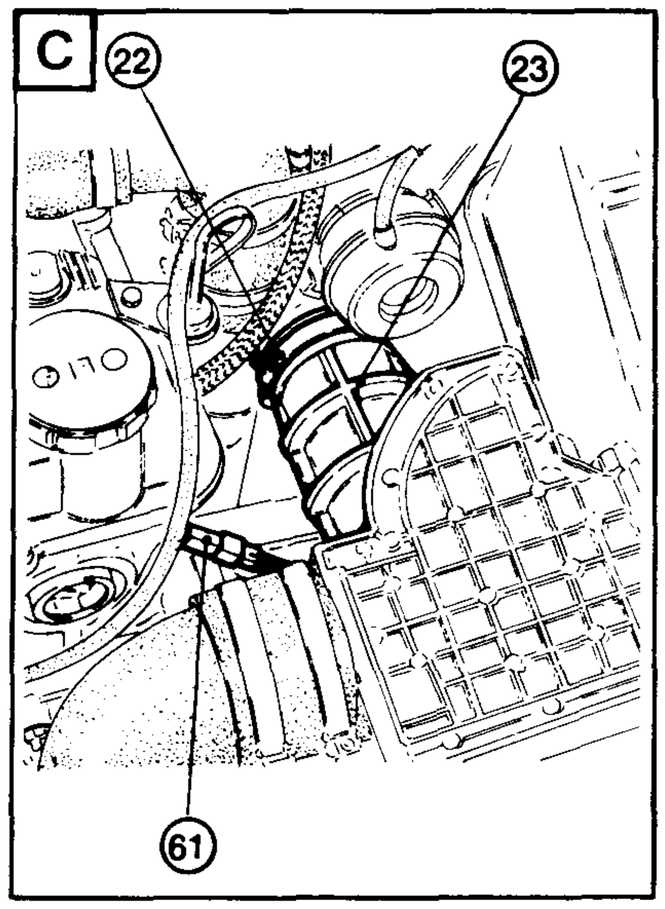

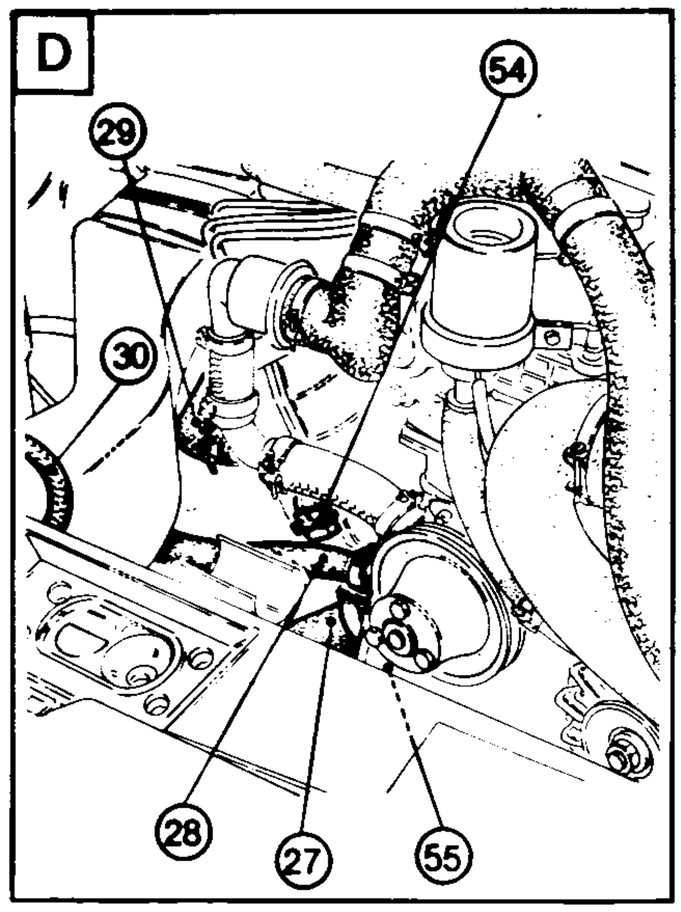
D
54
29
30
28
27
55

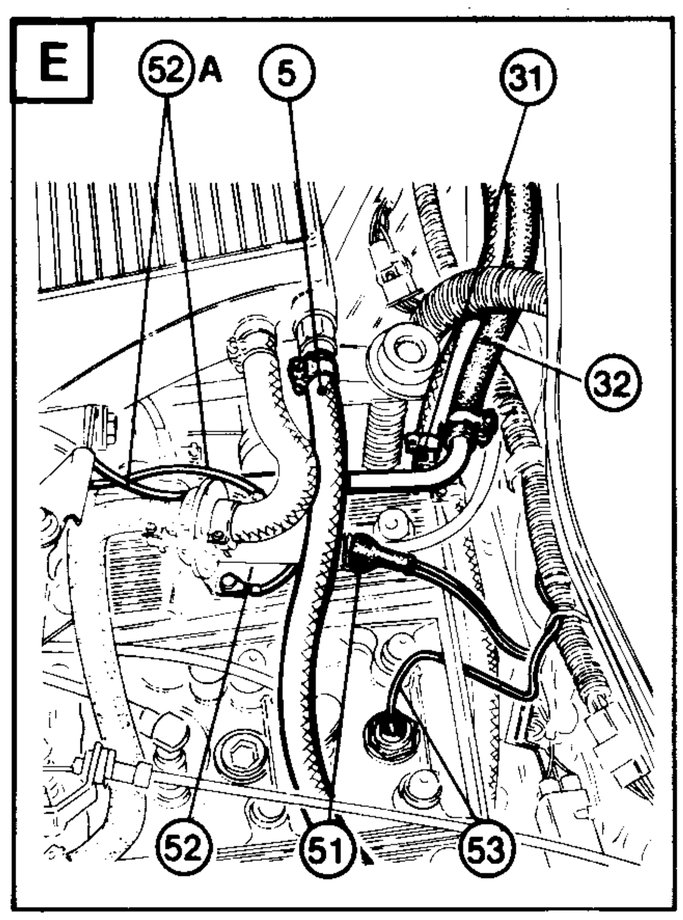
E
52 A
5
31
32
52
51
53

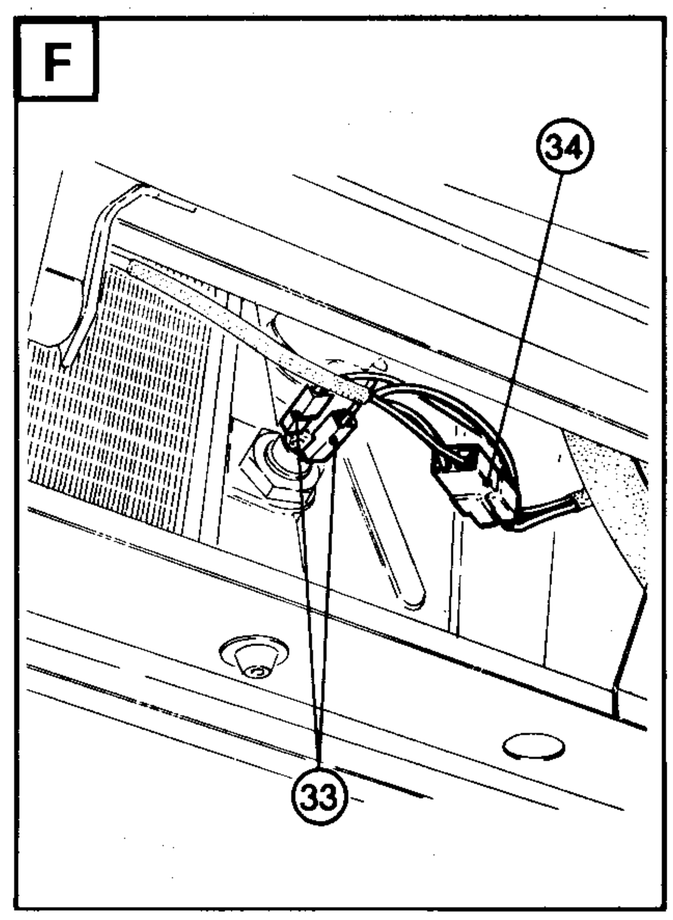
F
34
33

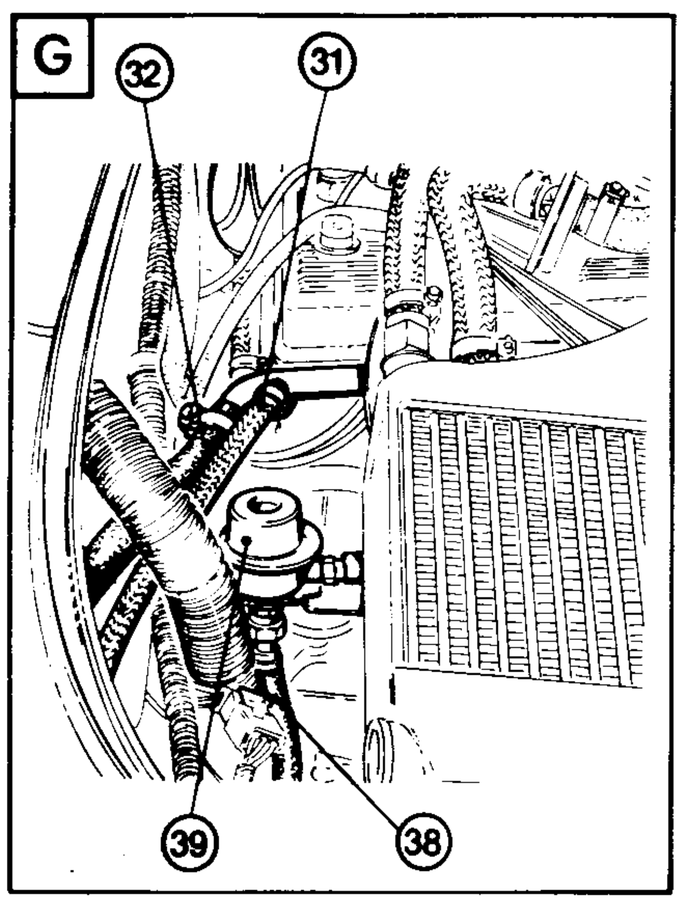
G
32
31
39
38

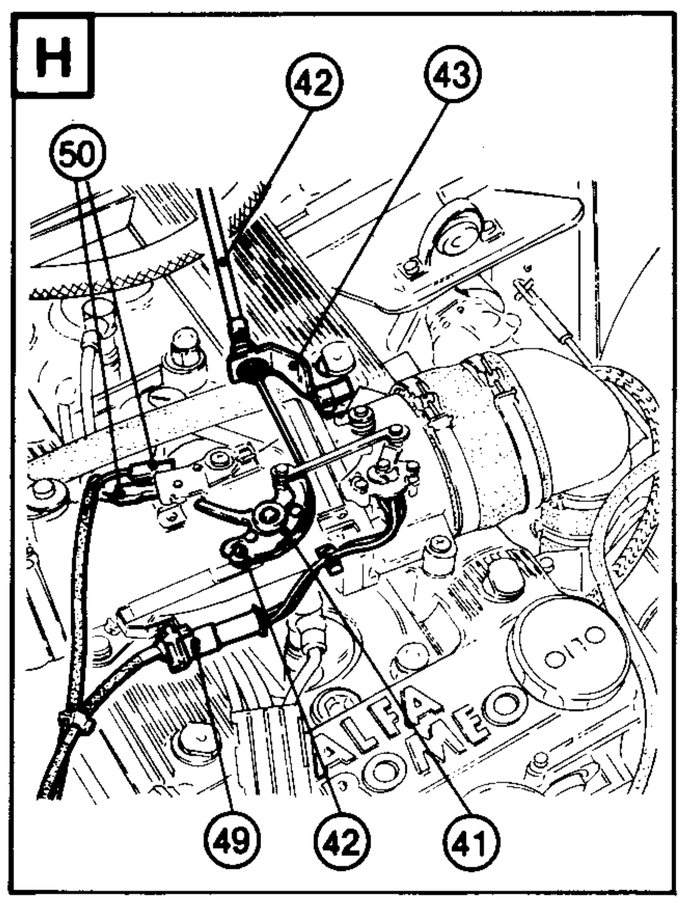
H
42
43
50
49
42
41
ALFA ROMEO

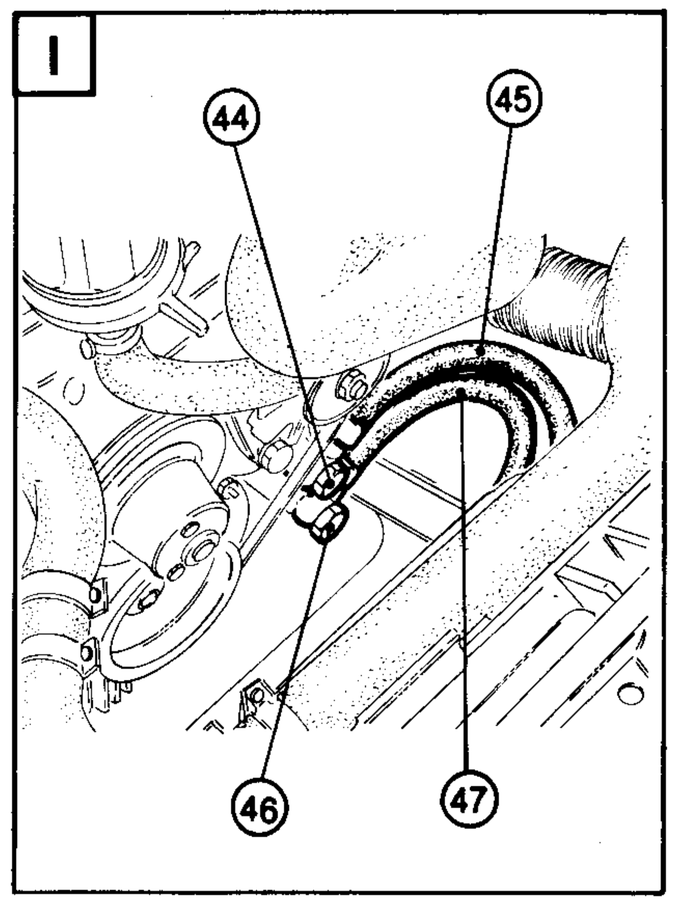
I
44
45
46
47

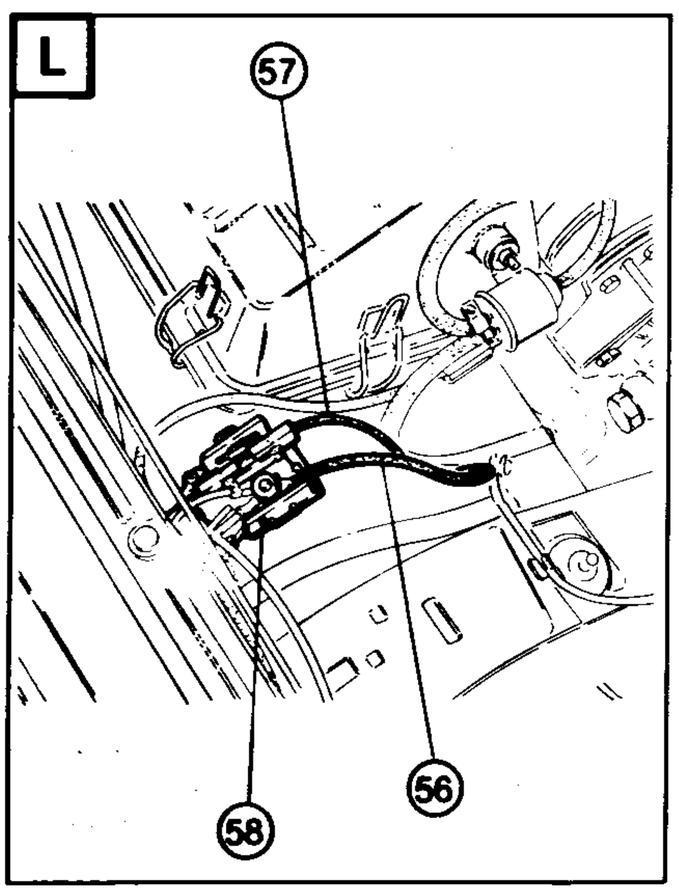
L
57
58
56

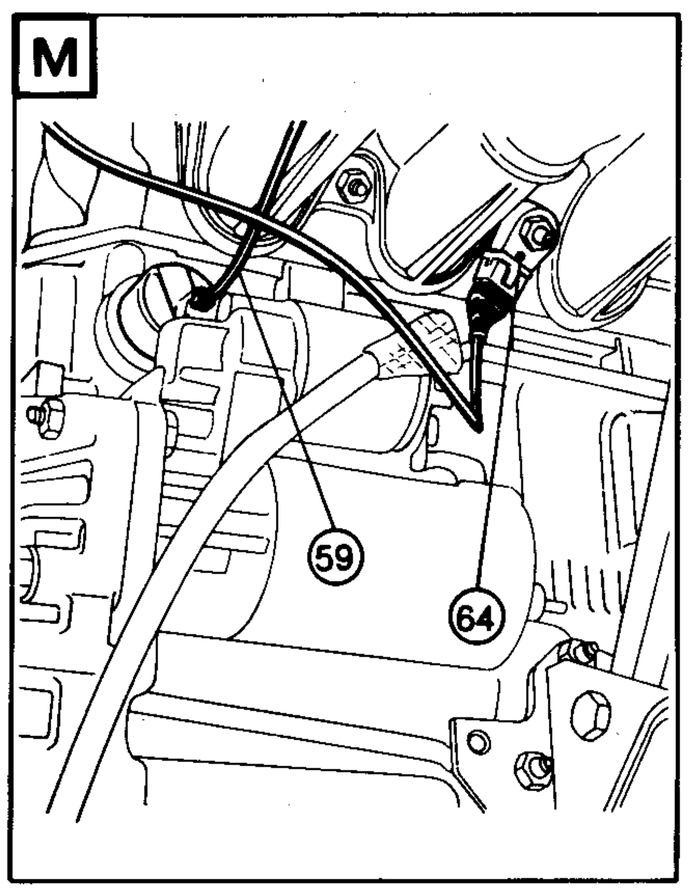
M
59
64

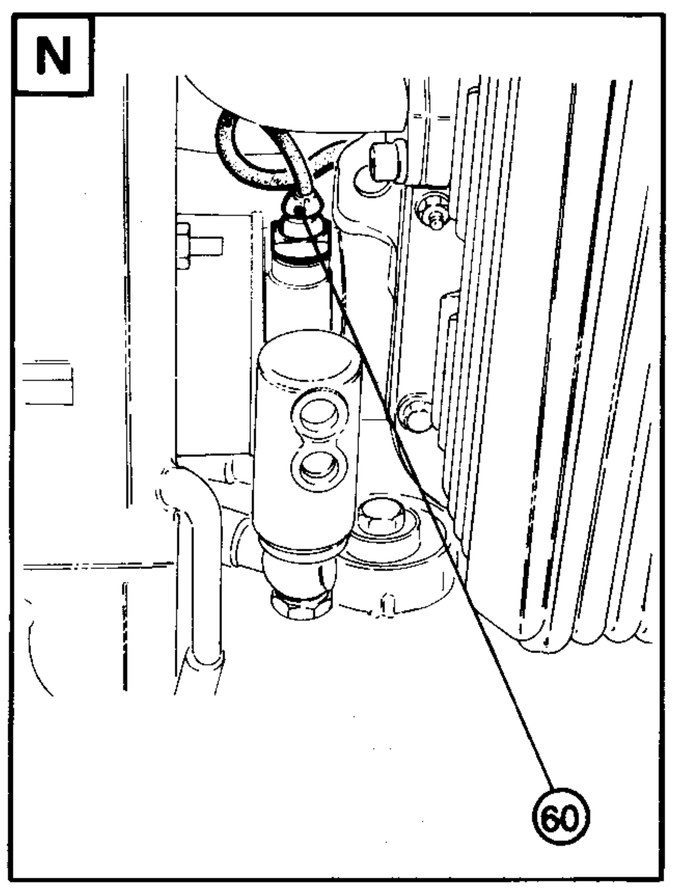
N
60

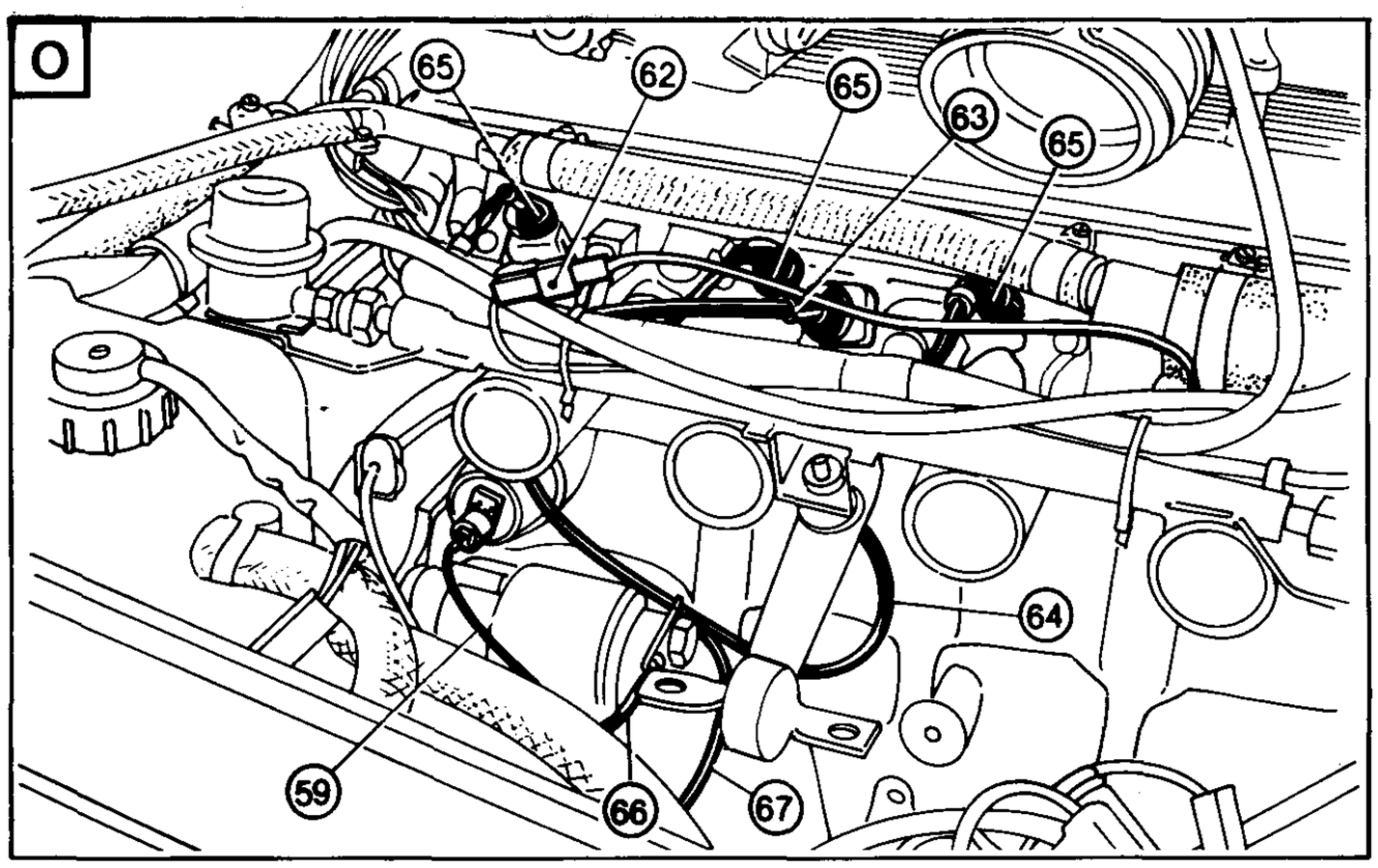

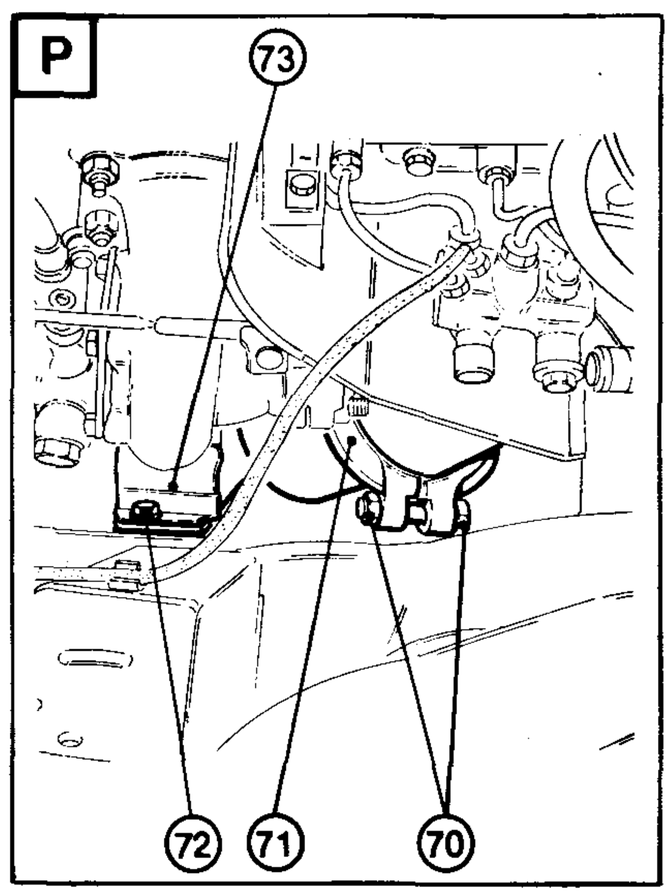

1. Battery
2. Air intake and battery bracket retaining screws
3. Intercooler air intake
4. Battery retaining bracket
5. Servo brake vacuum intake hose
6. Supercharging pressure sender cable
7. Intercooler air intake retaining screws
8. Sleeve
9. Intercooler
10. Supercharging pressure control solenoid valve (Pierburg)
11. «Pierburg» solenoid valve supply cable
12. Hose connecting oil sedimenter
13. Pressure intake hose (from compressor)
14. Hose connecting overpressure valve
15. Nuts and washers retaining «Pierburg» valve
16. Air flow meter cable
17. Air flow meter
18. Air intake upper retaining screw
19. Air intake retaining clamps
20. Air filter cover retaining clips
21. Air filter cover
22. Clamp securing air intake duct to compressor
23. Air intake duct
24. Oil vapour exhaust hose
25. Sleeve clamp
26. Coolant return sleeve
27. Coolant delivery sleeve
28. Coolant return hose (from heater)
29. Radiator coolant supply hose
30. Radiator breather hose
31. Cooling system breather hose
32. Coolant delivery hose (to heater)
33. Fan control cable
34. Fan supply cable
35. Radiator retaining screw
36. Radiator
37. Pressure regulator
38. Fuel delivery hose
39. Hammering damper
40. Accelerator control guard
41. Accelerator control cam (throttle control)
42. Accelerator control cable
43. Accelertor control cable support bracket
44. Union
45. Oil delivery hose (to radiator)
46. Union
47. Oil return hose (from radiator)
48. Ignition coil cable
49. Throttle position sending unit cable
50. Minimum cut-out switch
51. Auxiliary air solenoid valve supply cable
52. Auxiliary air solenoid valve ground cables

52A Air intake manifold ground cables

53. Coolant maximum temperature indicator light cable
54. Hall effect sensor cable
55. Engine oil level indicator light cable
56. Alternator supply cable
57. Alternator indicator light cable
58. Terminal board
59. Engine oil pressure indicator cable
60. Low engine oil pressure indictor light cable
61. Connector for low engine oil pressure cable
62. Coolant temperature indicator cable
63. Coolant temperature sensor cable
64. Knock sensor cable
65. Electro-injector supply cables
66. Starting motor supply cables
67. Starting motor electromagnet energizing cable
68. Heat guard retaining screws
69. Heat guard
70. Collar retaining bolt
71. Collar
72. Engine mount upper retaining screws
73. Heat guard (on LH mount)

VIEW OF UNDERBODY Alfa 75 1.8 turbo

FRONT SECTION

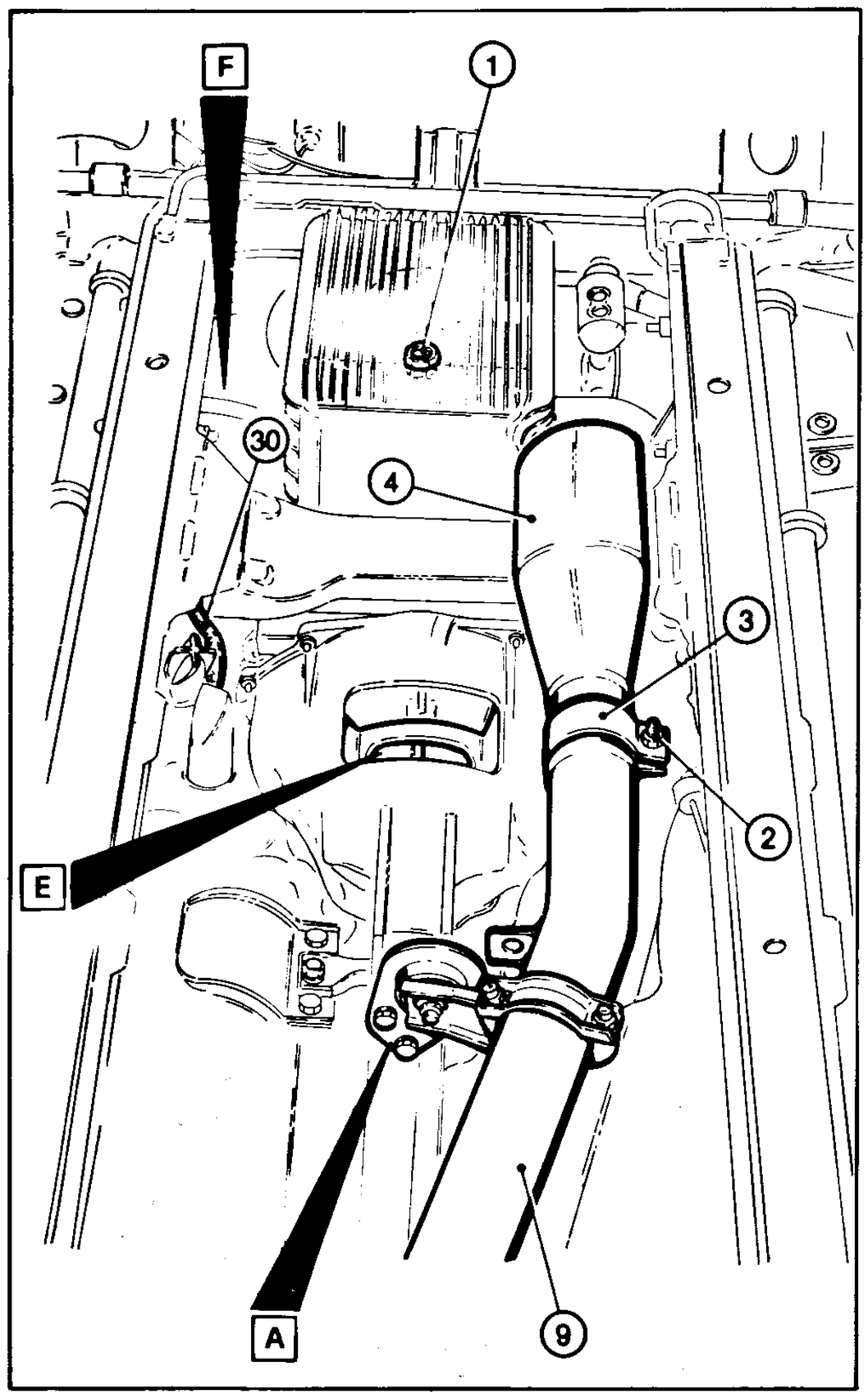

CENTRE SECTION

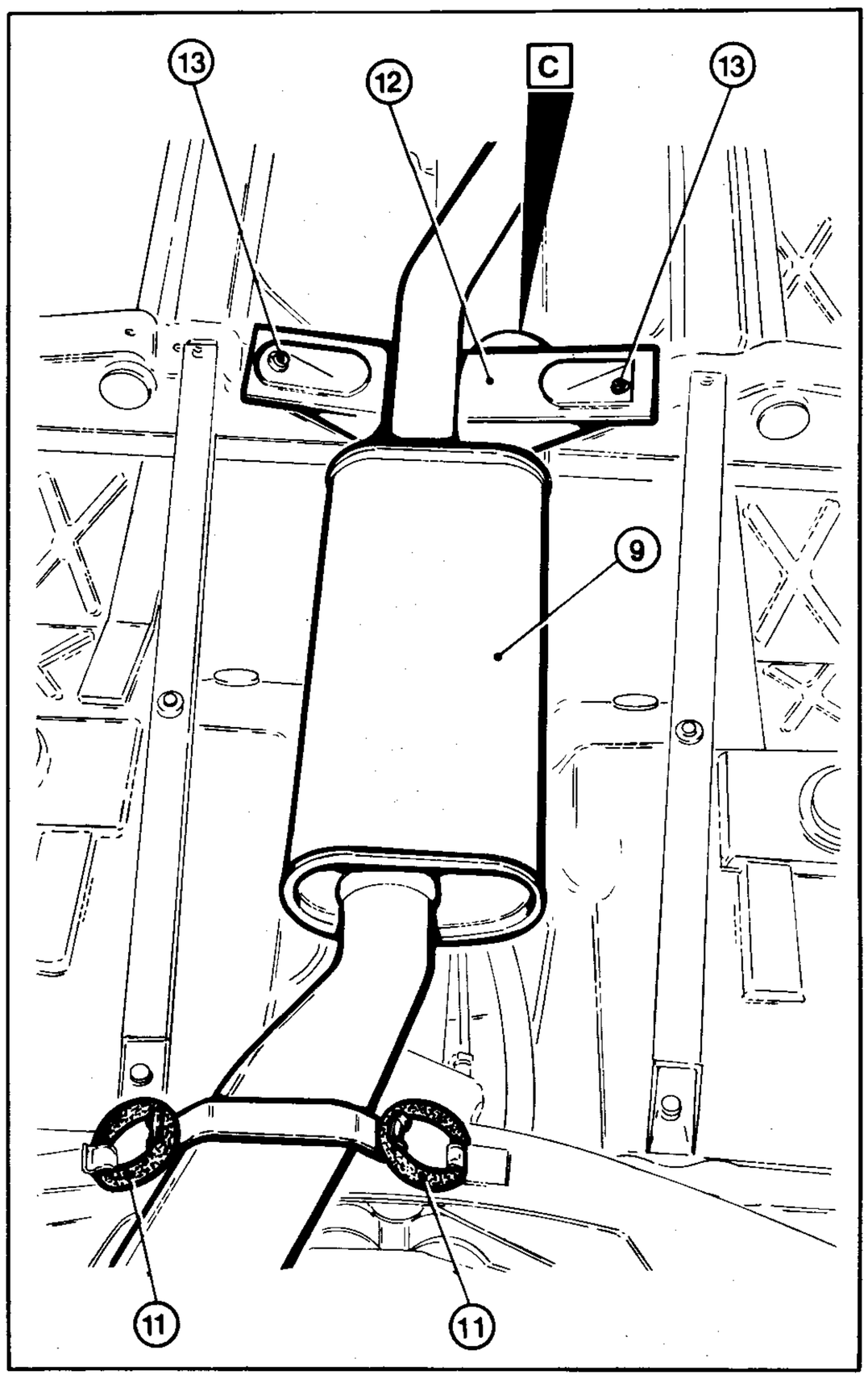

REAR SECTION

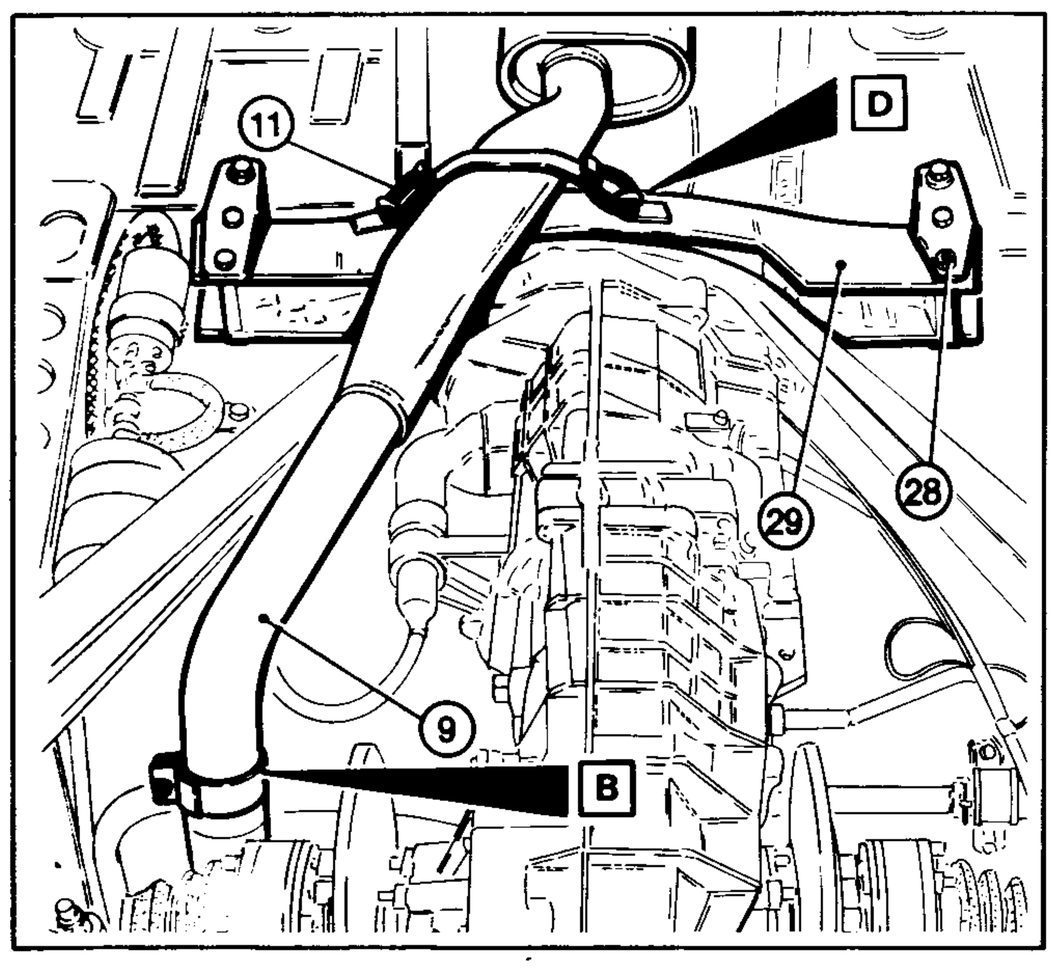

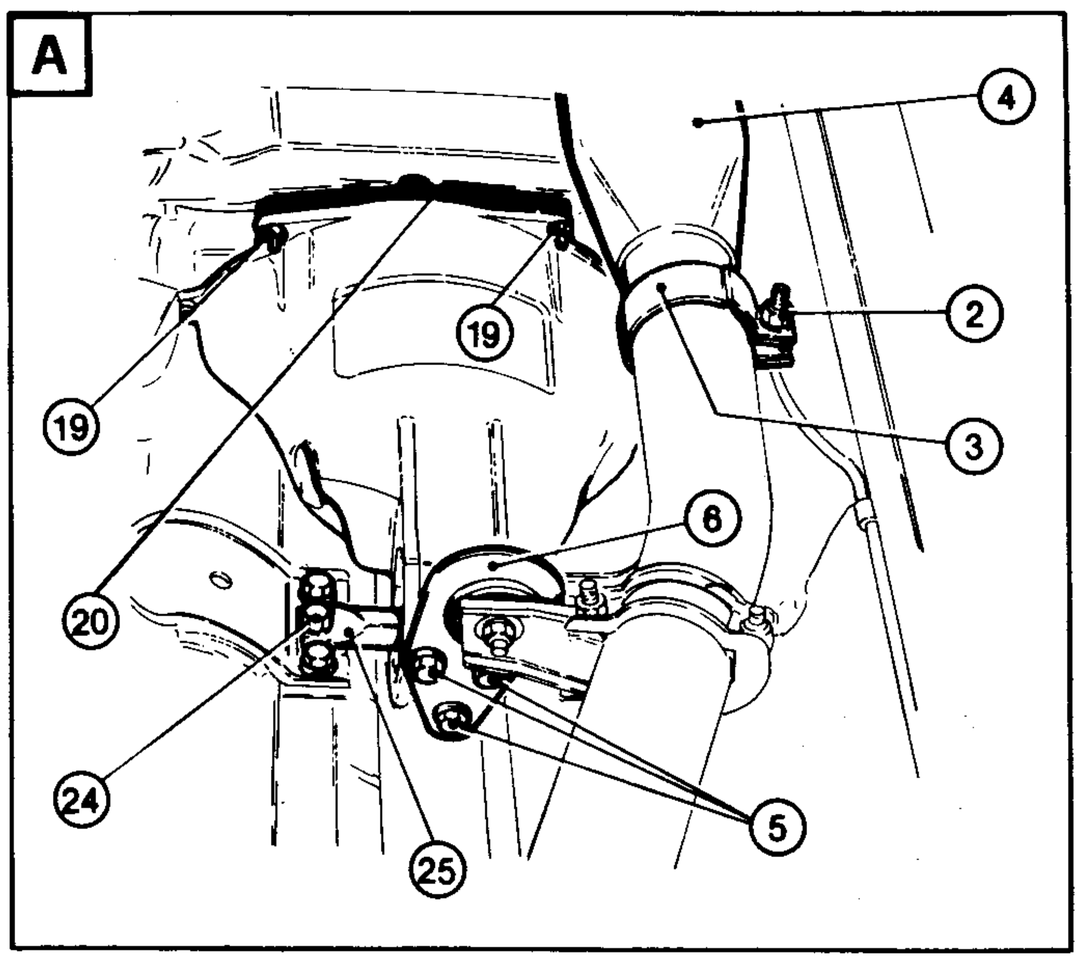

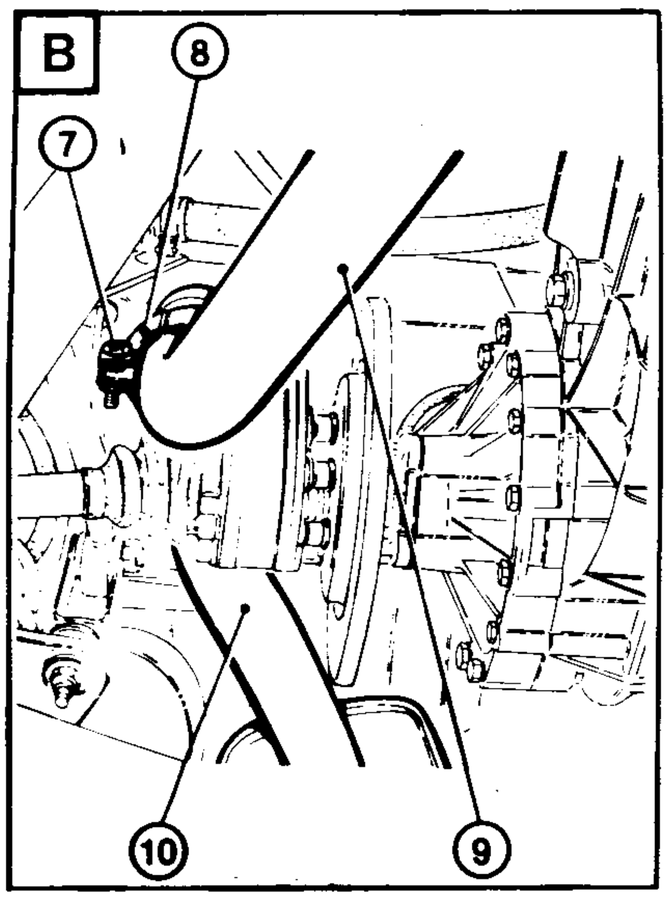

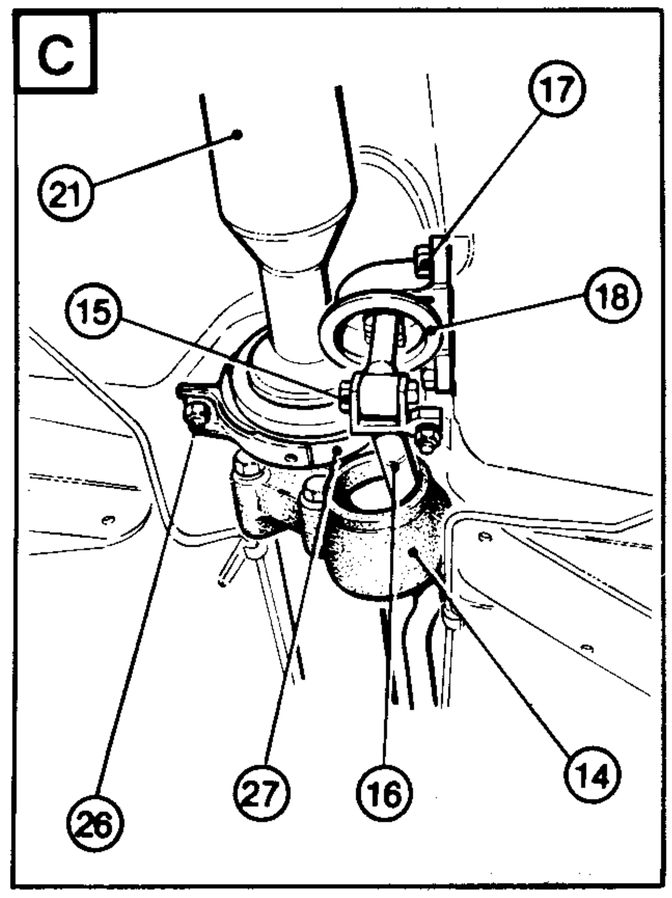

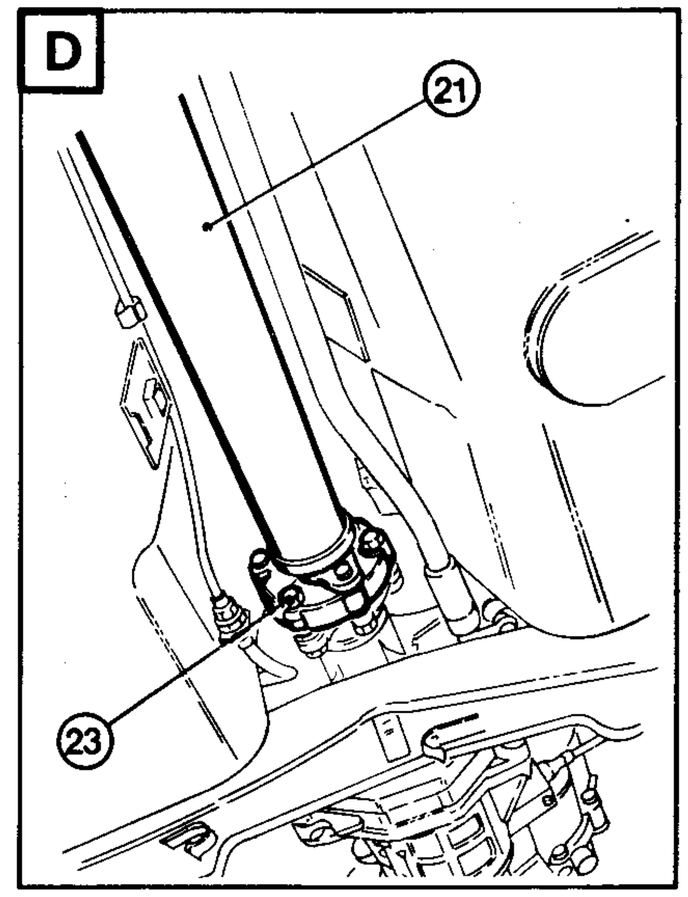

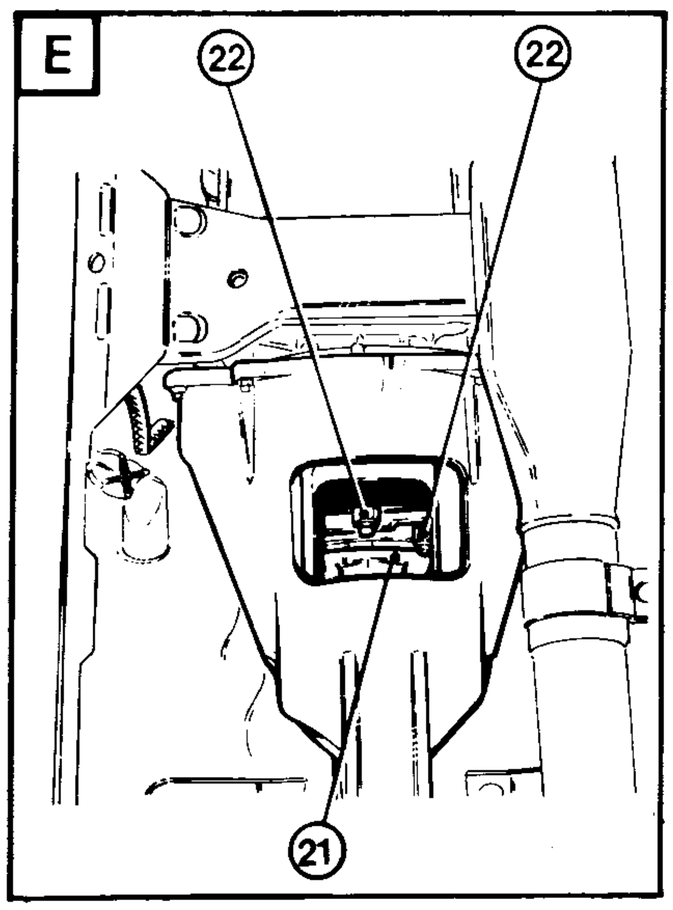

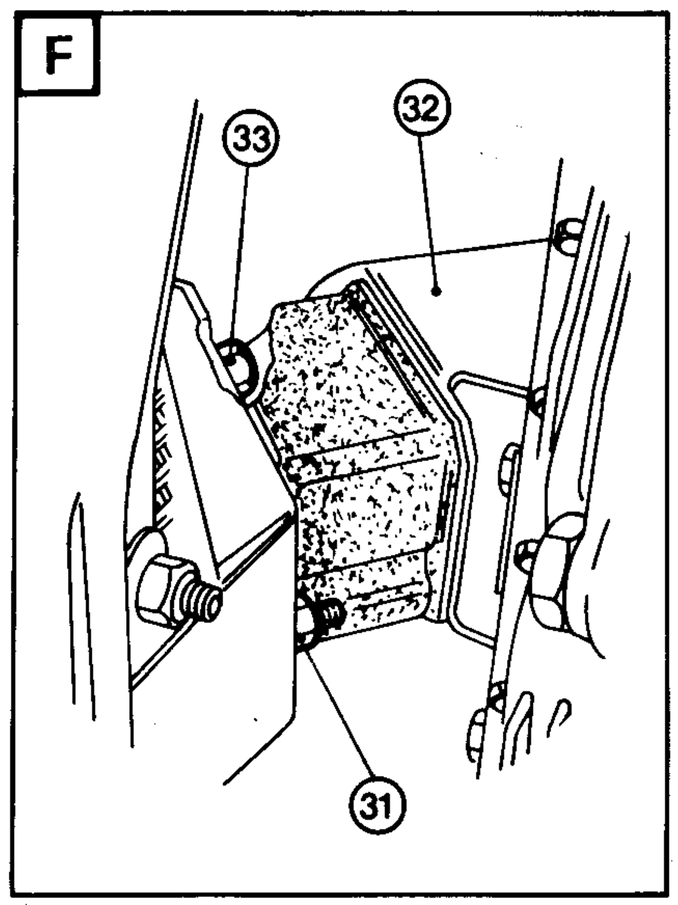

1. Oil drain plug
2. Clamp nut
3. Clamp
4. Exhaust pipe front section
5. Bracket retaining screws
6. Exhaust pipe centre section support bracket
7. Clamp nut
8. Clamp
9. Exhaust pipe centre section
10. Tail pipe
11. Exhaust pipe centre section rubber support rings
12. Cross member
13. Cross member rataining screws
14. Boot
15. Retaining bolt
16. Gear rod
17. Support retaining screws
18. Gear lever support
19. Guard retaining bolts
20. Flywheel guard
21. Transmission shaft
22. Front flexible coupling retaining nuts
23. Rear flexible coupling retaining bolts
24. Pin retaining bolts
25. Engine rear support pin
26. Propeller shaft centre support retaining nuts
27. Propeller shaft centre support
28. Rear crossmember retaining screws
29. Rear crossmember
30. Ground cable
31. Engine side mount lower retaining nuts
32. Engine side mounts
33. Engine side mount upper retaining screws

ENGINE REMOVAL AND INSTALLATION

FOREWORD

This section contains all the data and procedures relating to the removal and installation of the engine fitted on the following Alfa Romeo vehicle:

Given that the operations involved in removing and installing the engine are somewhat numerous, the operator is urged to read the intervention procedures carefully and to examine with care the illustration of the assembly that give an indispensable but of course incomplete overall view of the engine.

Following the above advice permits the correct operational techniques to be acquired and familiarizes the technician with the technical data, and caution and warning captions.

LOCATION OF ENGINE SUPPORTS

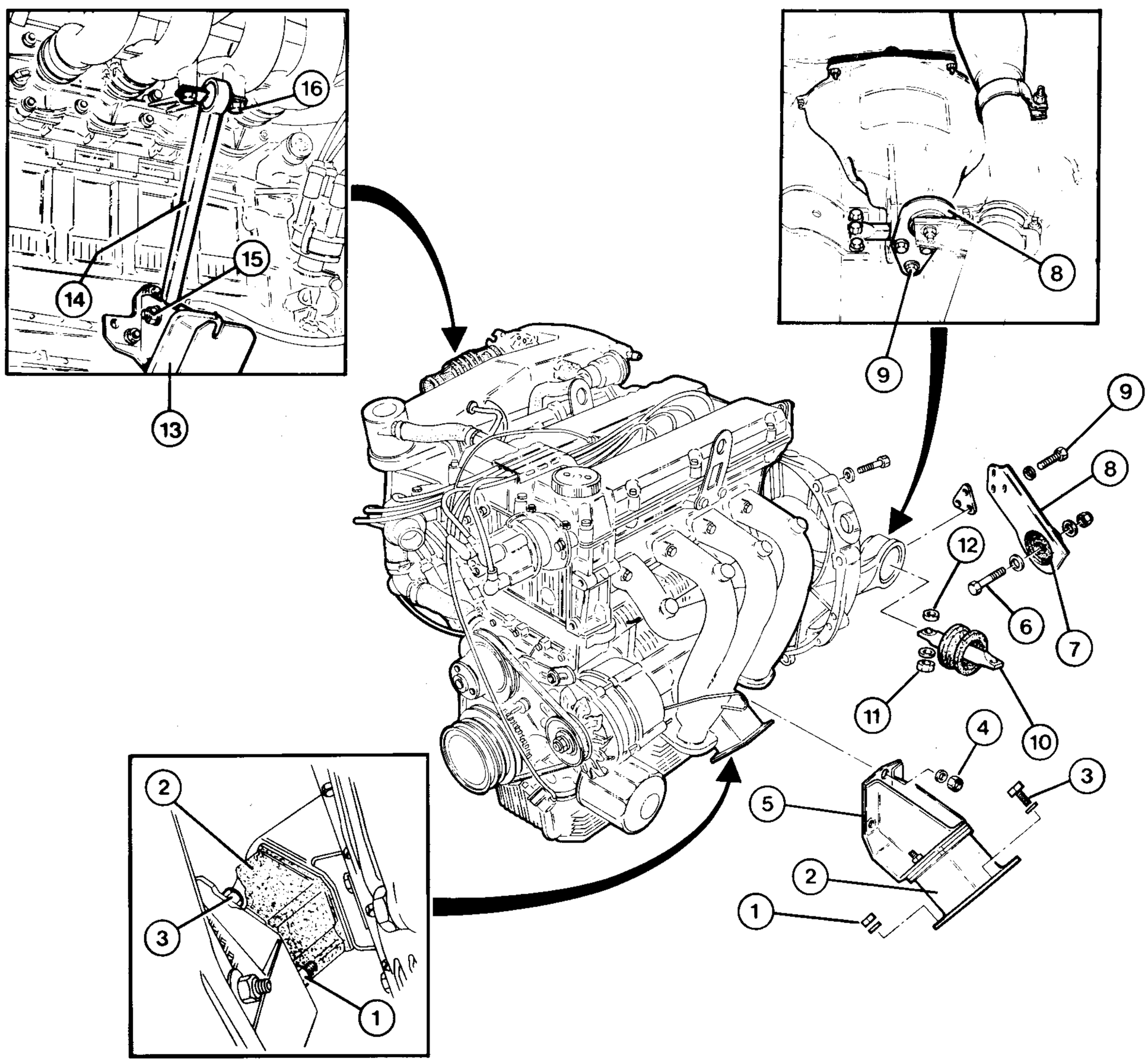

1. Nut retaining side mount to body shell
2. Side mount rubber bushing
3. Screw retaining side mount to body shell
4. Screw retaining mount to engine block
5. R.H. side engine mount
6. Bolt retaining exhaust pipe bracket to silentbloc
7. Silentbloc for exhaust pipe support bracket
8. Exhaust pipe support bracket
9. Screw retaining bracket to flywheel cover
10. Rear mount
11. Nut retaining rear mout to the body shell
12. Spacer
13. R.H. support position
14. Support strut - air intake housing
15. Strut retaining bolt
16. Retaining screws for air intake housing

REMOVAL

1. Preliminary operations

a. Place vehicle on lift platform and chock wheels.

CAUTION:
When the engine is hot, proceed with caution to avoid burns.

b. Open hood and secure in open position with associated strut (1).
Remove hinge bolts (2) and lay hood back in fully open position.

CAUTION:
Protect contact points with suitable soft materials.

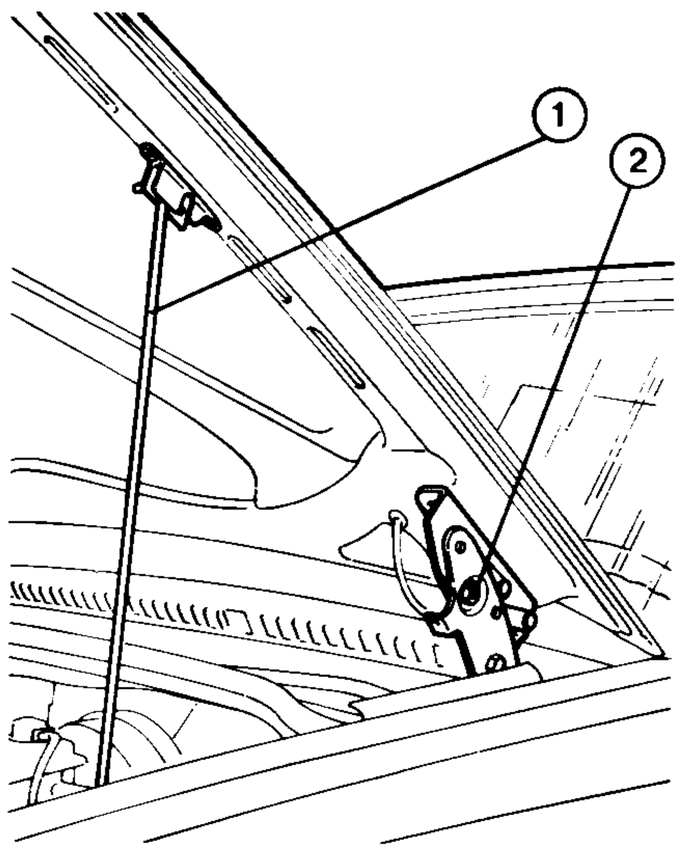

1. Strut
2. Bolts

CAUTION:
For maximum safety, the hood should be secured in the open position to prevent it from falling suddenly.

For location of parts identified by reference numbers below, see the view of the engine compartment for the vehicle in question.

c. Disconnect positive « + » and negative « — » terminals from battery (1).
d. Loosen screws which hold the anchor brackets of the battery and, if necessary, remove the battery.
e. Disconnect the intake hose to the servo braking system (2) from the linkage on the braking system, loosening the clips (see detail **A**).

2. Air supply system removal

a. Disconnect the clamp (3) of the air flow meter.
b. Disconnect the following hoses from the air supply:
- Oil vapour recycling hose for fast running (4).
- By-pass hose to regulate slow running (5).

c. Loosen the clamp (6) and disconnect the air intake duct (7) from the throttle body.
d. Slacken the clamp (8) and remove the air intake duct (7) from the air flow meter.
e. Release the four clips securing air filter cover (9) and remove it together with air flow meter.
At the same time, remove the filter element.
f. If necessary, unscrew the three nuts (10) securing the air (11) filter casing to the body and remove it (see detail **B**).

CAUTION:
Plug the air-intake hosing so as to prevent any foreign matter from entering.

3. Removal of cooling system radiator and hosing

a. Disconnect the following hoses and sleeves, and remove them preferably from the part indicated:
— slacken clamp (12) and remove coolant return sleeve (13) from the thermostat;
— slacken clamp and remove the coolant delivery sleeve (14) from the water pump (see detail **C**);

NOTE:
Place a suitable container under the vehicle to collect drained liquid.

— slacken the clamp and remove heater coolant return hose (15) from water pump (see detail **C**);
— slacken the clamp and remove radiator delivery line (16) from tee (see detail **C**);
— slacken the clamp and remove breather line (17) from the radiator;
— slacken the clamp and remove cooling system breather line (18) from union on cylinder head (see detail **D**);
— slacken clamp and remove heater coolant delivery line (19) from butterfly valve union (see detail **E**).

b. Disconnet fan control cable (20) from the temperature switch on the lower right part of the radiator (see detail **F**).
c. Disconnect fan supply cable (21) from in-line connection (see detail **F**).
d. Remove screw (22) retaining radiator (23) to body steel and remove it together with the fan.

4. Removal of fuel system

WARNING:
- **Proceed with caution: the supply system may be under pressure.**
- **Keep tubing pointing upwards to prevent fuel escaping.**
  Ensure also that the workshop is correctly equipped to enable operations to be carried out safety.

a. Disconnect fuel return hose (24) from rear part of pressure regulator (25) (see detail **G**).

b. Disconnect fuel delivery line (26) from front part of hammering dampner (27) (see detail **H**).

CAUTION:
There may be residual pressure between fuel pump and hammering dampner which could cause petrol to spray out. Plug disconnected hose (26).

5. Accelerator cable disconnection

a. Rotate fully, clockwise, accelerator control cam and withdraw the control cable pawl (28) from the end of the cam (see detail **I**).

b. Withdraw the accelerator control cable (28) from support bracket (29), withdrawing it from the bottom (see detail **I**).

6. Electrical cable disconnection

a. Disconnect the following electrical cables and remove as indicated:

— HT cable (30) for ignition coil from front spark plugs;
— HT cable (31) from ignition coil for rear spark, plugs, and if necessary, remove the coil (32) itself, unscrewing the two retaining screws (see detail **L**);
— minimum and maximum butterly valve cut-out cable (33) from relative switch;
— supply cable (34) from slow running regulator;
— injection ground cables (35) from right side of cylinder head cover;
— engine oil pressure indicator cable (36) from bulb on right side of engine block (see detail **M**);
— coolant temperature sensor cable (37) from transmitter on right side of intake manifold (see detail **M**);
— coolant temperature indicator cable (38) from bulb on rear part of cylinder head (see detail **M**);
— maximum temperature coolant warning light (39) cable from thermal switch on rear part of cylinder head (see detail **M**);
— revs and phases sensor cable (40) from connection on left valance panel of engine compartment (see detail **N**);
— engine ground cable (41) slacken the screw on rear left side of engine block near the water jet pump (see detail **O**);
— engine minimum oil pressure indicator cable from the mobile connection (42) near alternator (see detail **O**);
— engine oil minimum pressure indicator (43) from transmitter on R.H. side of engine block, under distributor (see detail **P**);
— phase variation cables (44) from respective connections on front right side of cylinder head;
— electro-injector feed cables (45) from respective connectors;
— alternator supply (46) and warning light (47) cables from (48) terminal board on engine compartment left valance panel (see detail **Q**);
— feed (49) and energising (50) cables from starter motor (51) on RH side of rear cover (see detail **R**).

CAUTION:
Release the electrical cables from any clips and arrange them so that they do not interfere with engine removal.

7. Compressor and air conditioner removal

a. Working from underneath the vehicle remove the two bolts retaining the compressor conditioner (52) support bracket to the engine block.

b. Remove compressor drive belt (53).

c. Move compressor (52) to right of vehicle and secure by suitable means.

d. If necessary, drain Freon fluid and disconnect pipe fittings from compressor.

8. Power steering pump removal

a. Slacken the screw retaining the belt stretcher pulley (54) and remove the power steering pump drive belt (55).

b. Slacken the three screws (56) retaining the power steering pump to the support.

c. Move the power steering pump (57) to the left of vehicle and secure by suitable means.

d. If necessary, drain or draw off oil from tank (58) using a syringe and disconnect pipe fittings from power steering pump.

9. Final operations

a. Slacken but do not remove, on both sides, the screws (59) fixing the upper part of the engine side mounts to the body steel (see detail **S**).

b. Remove heat guard (61) by unscrewing the two retaining screws (60) (see detail **S**).

For the following steps, see figure «View of underbody» of this vehicle.

10. Oil discharge (if required by the operations to be performed)

a. Raise the vehicle on the garage lift.

b. Unscrew plug (1) and drain engine oil. Replace the plug once work has been completed.

11. Exhaust pipe removal

a. Remove the four nuts washers (2) which connect the front selection of (3) the exhaust with the engine exhaust manifold.

b. Slacken the nut (4) securing clamp (5) which connects front and rear sections (6) of exhaust pipe (see detail **A**).

c. Remove bolt (7) securing front section of exhaust pipe to support bracket (8) at the end of the flywheel cover.

d. Free the front section (3) from rubber support rings (9) (see detail **B**).
Remove the front section having separated it from the rear section.
e. Remove the two screws (10) fixing the heat guard to the lower part situated on the left engine mount; remove the guard (11).

12. Propeller shaft removal

a. Remove centre cross member (13) after removing screws (12) securing it to the body shell.
b. Slide off boot (14), unscrew and remove bolt (15) and disconnect gear selector rod (16) (see detail **C**).
If necessary, remove screws (17) securing gear lever support (18) and move it to permit the removal of the propeller shaft (see detail **C**).
c. Slacken bolts (19) and remove flywheel guard (20) (see detail **E**).
d. With gearbox in neutral, rotate propeller shaft (21), alternately slackening nuts (22) and bolts (23) securing it, respectively, to the flywheel and to the clutch yoke (see details **D** and **F**).
e. Remove the two screws (24) and disconnect pin (25) of engine rear mount from the body shell (see detail **G**).
f. Slacken the two nuts (26) and disconnect propeller shaft centre support (27) from the body shell (see detail **C**).
g. Remove the six screws (28) securing rear cross member (29) to body shell and remove it (see detail **B**).
h. Raise the rear axle using a column lift provided with cradle **A.2.0075** and then extract propeller shaft from the clutch yoke.
i. Lower the column lift and remove the propeller shaft.

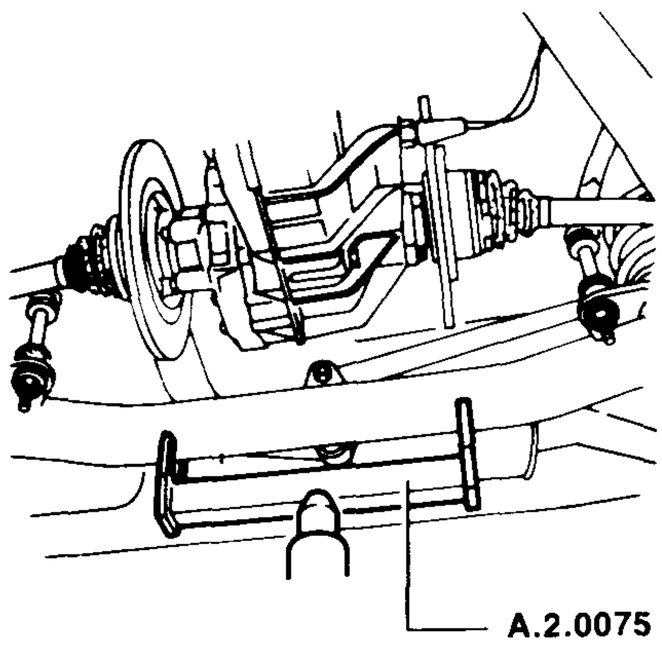

13. Final operations

a. Fit a suitable operating lever on the engine rear support to aid engine removal operations.
b. Slacken and remove lower nuts (30) retaining side engine mounts (31) (see detail **H**).
c. Lower garage lift and then unscrew and remove upper screws (33) retaining side mounts (32) (see detail **F**).
Raise the garage lift.
d. Hook a suitable hydraulic lift to engine lift bracket.
Activate lift and raise engine while tilting with a suitable lever.

NOTE:
If necessary, disconnect center spark plug cables and remove spark plug.

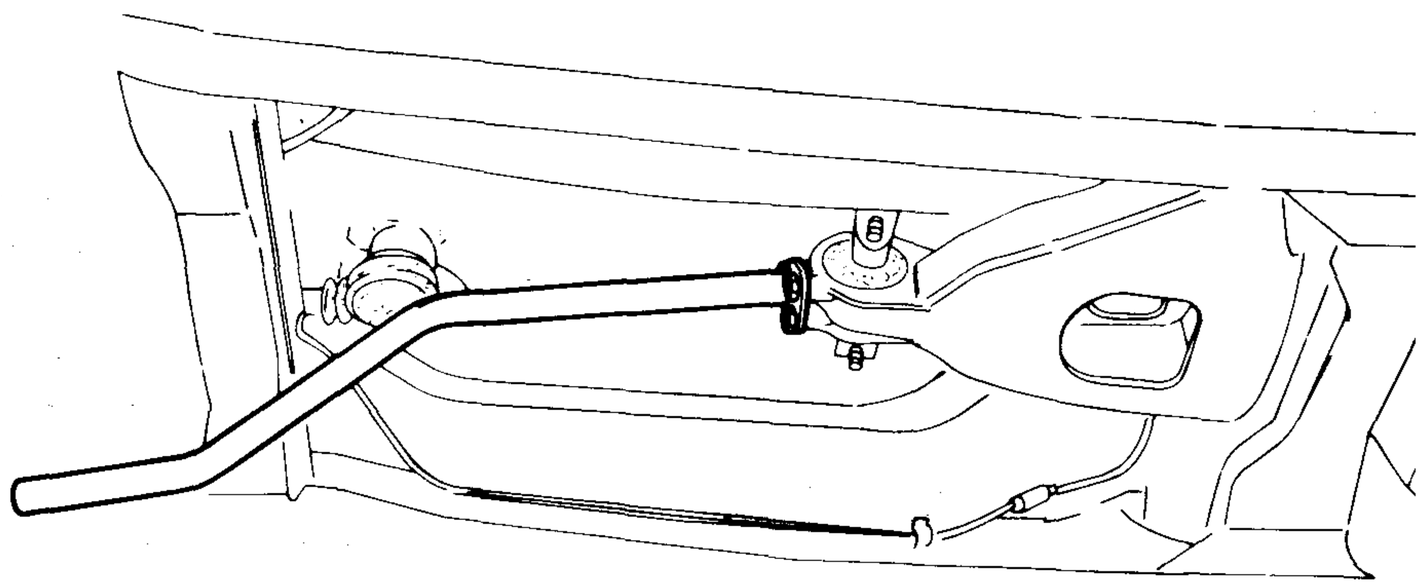

INSTALLATION

For the following operations refer to bottom view of vehicle in question.

1. Preliminary operations

a. Install service handle on rear engine mount.

b. Fasten engine to lifting bracket and, using a suitable hoist, lower powerplant slowly in engine compartment guiding it with the service handle.

c. Centralize engine in engine compartment over the two side mounts and ensure that holes for screws and studs are correctly aligned on both mounts.

d. Start and tighten screws (32) retaining cushion mounts (31) to body on both sides (see detail **H**).

e. Raise vehicle, start and tighten nuts (30) retaining mounts to body at bottom on both sides (see detail **H**).

f. Remove service handle from rear engine mount.

2. Install the propeller shaft group

a. Install the propeller shaft group by following the removal procedures in reverse order («Removal» step 12.) and noting the points below:

— **Lubricate** shaft front bushing and rear joint spherical seat using **5 cm³ (0.2 fl·oz)** of **ISECO MOLYKOTE BR2** grease.
  If necessary lubricate the flywheel bushings with the same grease.

— Restrain shaft by suitable means and tighten nuts (22) and bolts (23) of flex. couplings each in turn to the specified torque.

(T) : Tightening torque
Nuts and bolts retaining shaft flex. couplings to flywheel and clutch fork
55 to 57 N·m
(5.6 to 5.8 kg·m
40.6 to 42.0 ft·lb)

CAUTION:
When assembling use new self-locking nuts.

— Tighten nuts (26) retaining center bearing (27) to underbody.

(T) : Tightening torque
Center bearing nuts
93 to 103 N·m
(9.5 to 10.5 kg·m
6.6 to 76.0 ft·lb)

b. Fix pin (25) or engine rear support using the two screws (24).

c. Assemble flywheel guard (20) and tighten bolts (19).

d. Re-connect rod (16) to the gearlever with bolt (15) and slide on boot (14).

(T) : Tightening torque
Nut retaining gear control rod to rear lever
13 to 16 N·m
(1.3 to 1.6 kg·m
9.4 to 11.6 ft·lb)

e. Secure crossmember (13) to body shell using screws (12).

f. Tighten transmission unit crossmember (29) to body capscrews (28) to the specified torque.

(T) : Tightening torque
Transmission unit crossmember to body capscrews
39 to 44 N·m
(4.0 to 4.5 kg·m
28.8 to 32.5 ft·lb)

g. Check the specified distance «**A**» between the propeller shaft and rear engine support.

Distance «A» between the propeller shaft and rear engine support
A = 7 mm (0.28 in)

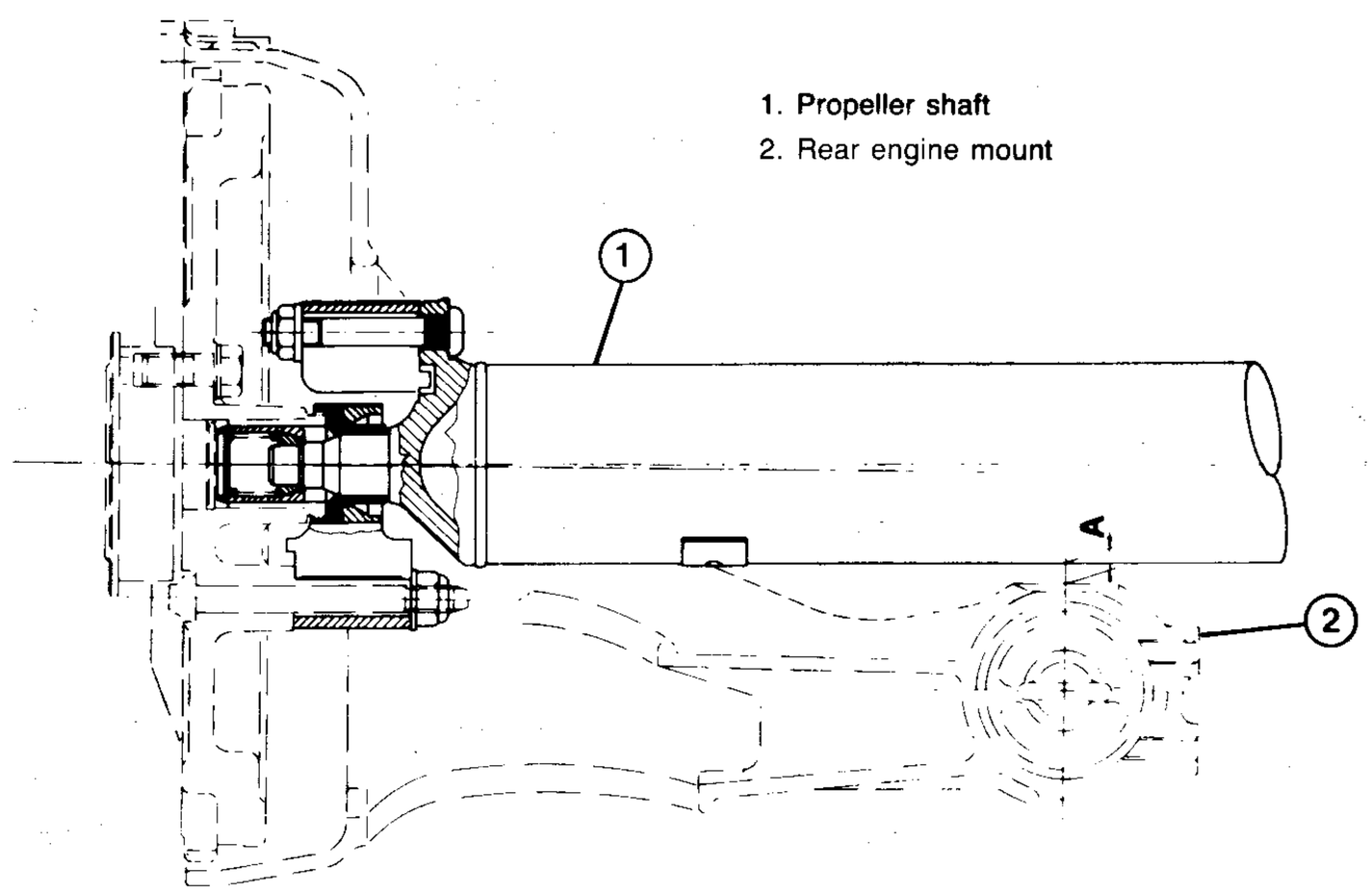

1. Propeller shaft
2. Rear engine mount

h. If this distance differs from the specified one, vary the length of the spacers (1) placed between the rear engine support (2) and the body accordingly.

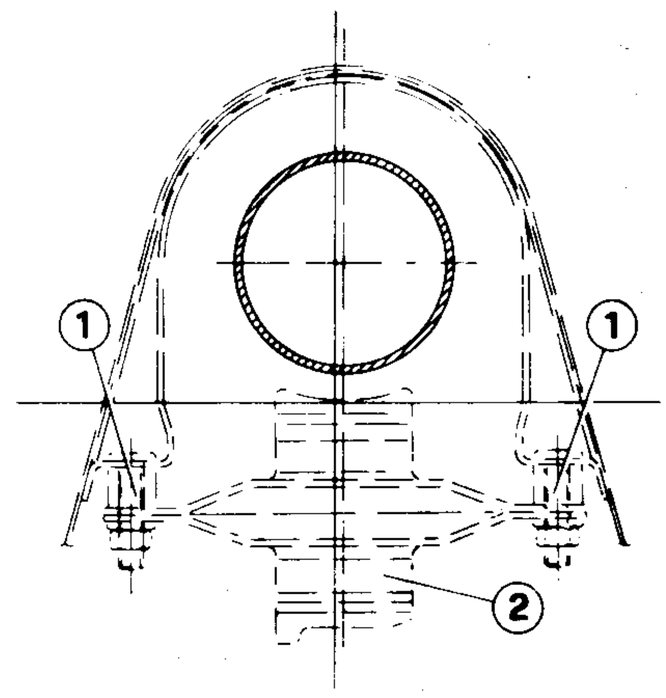

1. Spacer
2. Rear engine support

3. Exhaust pipe installation

a. Place front section (3) of exhaust pipe of the rubber support rings (9).

b. Connect the front section (3) of exhaust pipe to the rear section (6) without tightening the nut (4) of the clamp (5).

c. Tighten the bolt (7) securing the front section (3) of exhaust pipe to the support bracket (8) at the end of the flywheel cover.

d. Rock exhaust pipe to obtain proper alignment.
e. Tighten fully nuts (2) with washers which connect the front section (3) with the engine exhaust manifold and secure the clamp (5) by tightening the nut (4).

For the following steps, see the figure «View of the underbody» of this vehicle.

4. Power steering pump installation
a. Position steering pump (57), fasten to bracket and tighten the three screws (56).
b. Install the pump drive belt (55) on the pulleys and move the belt stretcher pulley (54) upwards in order to obtain the correct tension, then tighten screws on the stretcher pulley.

Force to be applied to belt at mid-leg:
P = 147 to 294 N
(15 to 30 kg; 33 to 66 lb)

Belt yield:
F = 13 mm (0.51 in)

c. If work has been carried out on the power steering circuit, it should be re-connected in the following way:
— Re-connect lines to the power steering pump in accordance with the following tightening torques:

(T) **: Tightening torque**
Oil return line connector on power steering pump connector
45 to 50 N·m
(4.3 to 5.1 kg·m
33.2 to 36.9 ft·lb)

Oil delivery connector on power steering pump connector
28 to 31 N·m
(2.9 to 3.2 kg·m
20.7 to 22.9 ft·lb)

— Top up the tank (58) with specified oil (AGIP ATF DEXRON B 11297; IP DEXRON FLUID B 11297) to the limit.
— On the pump fitting, loosen the return pipe fitting from tank to pump until a little oil flows out and all air is bled.
— Tighten the fitting to the specified torque.
— When engine has been installed, start it up and feed the tank until level settles.
— With the engine running, carry out a few full steering locks to right and left then top up oil in tank to the «MAX» mark.
— Replace the plug to tank.

5. Installation of air conditioner compressor
a. Reconnect compressor lower bracket (52) to engine block securing it from under the vehicle with the corresponding two bolts.
b. Refit compressor drive belt (53).
c. Restore correct tension to drive belt and tighten the nut.

Force to be applied to belt centre:
P = 78 N (8 kg; 17.5 lb)

Belt yield:
F = 10 to 15 mm (0.40 to 0.60 in)

d. If hose unions are disconnected, secure them to the compressor (52).

6. Installation of radiator
Refit radiator together with electric fan, then reconnect cooling system tubing by reversing the order of the procedure described in «Removal» step 3.

7. Air filter installation
Assemble the air filter and then re-connect the air supply hoses by following the procedures described in «Removal» step 2. in reverse order.

8. Fuel supply system
Assemble the fuel supply system by following the procedures described in «Removal» step 4. in reverse order.

9. Accelerator cable
Connect accelerator cable adopting a reversal of the «Removal» sequence, step 5.

10. Electrical connections
Restore electrical connection, reversing the order of the procedure described in «Removal» step 6.

11. Final operations
a. Reconnect servo-brake vaccum intake hose (2) to the union on servo-brake.
b. Place battery (1) in its housing, and secure it with appropriate bracket; then reconnect battery terminals.
c. For references and adjustments, see «Technical Characteristics» for each group.
d. Release bonnet, prop and install hing bolts on both sides of vehicle.

VIEW OF ENGINE COMPARTMENT 75 Twin Spark 2.0

E ▲33 4 5 ▲34 R M 2 A
I 6 7 8 G H 3 B 9 P L 30 17 52 53 12 C F 44 13 54 22 23 55 1 N Q O S D 35 45 58 57 56

▲ Component aspect not real

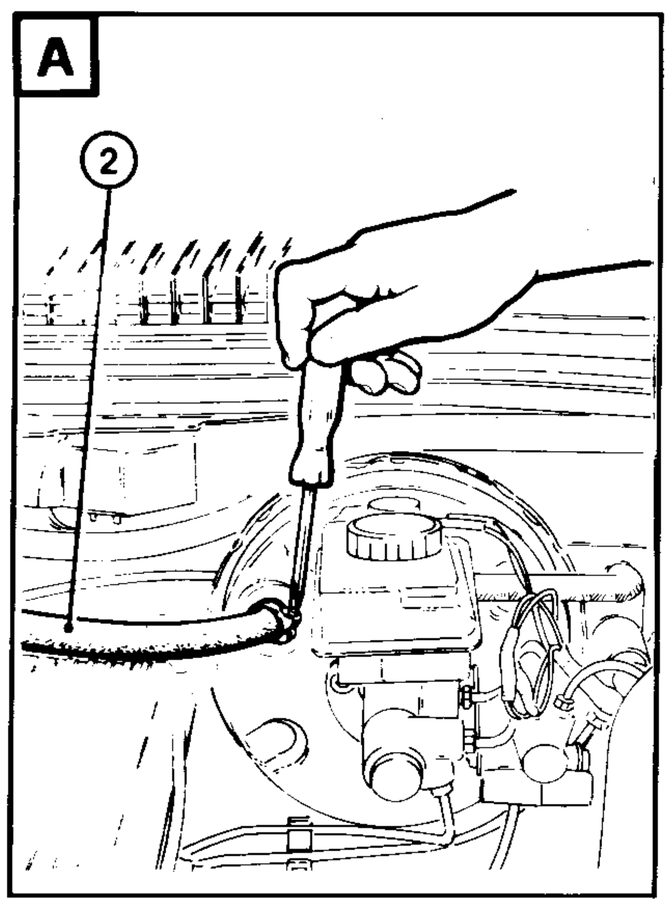

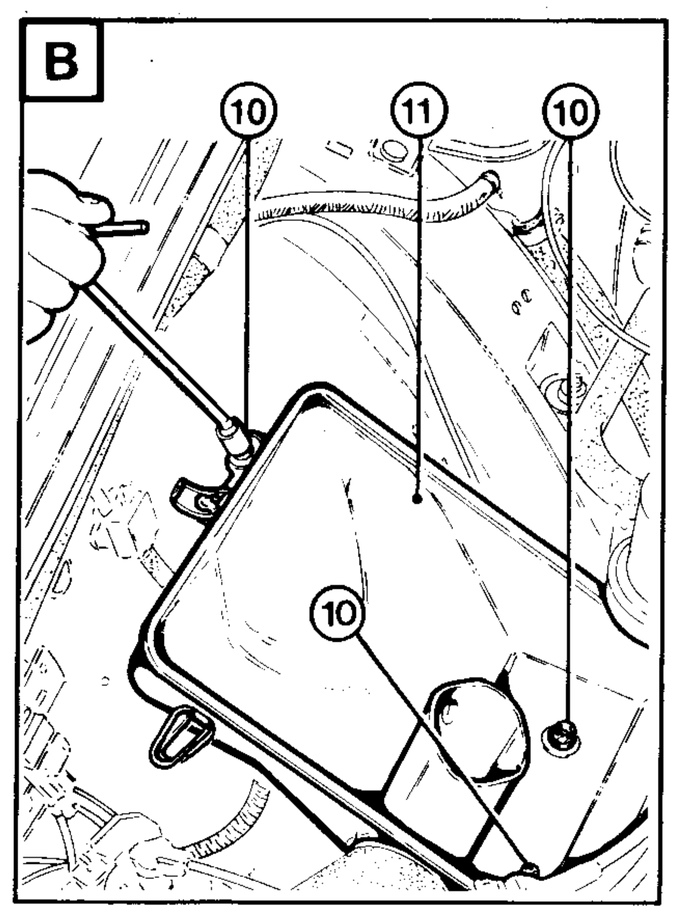

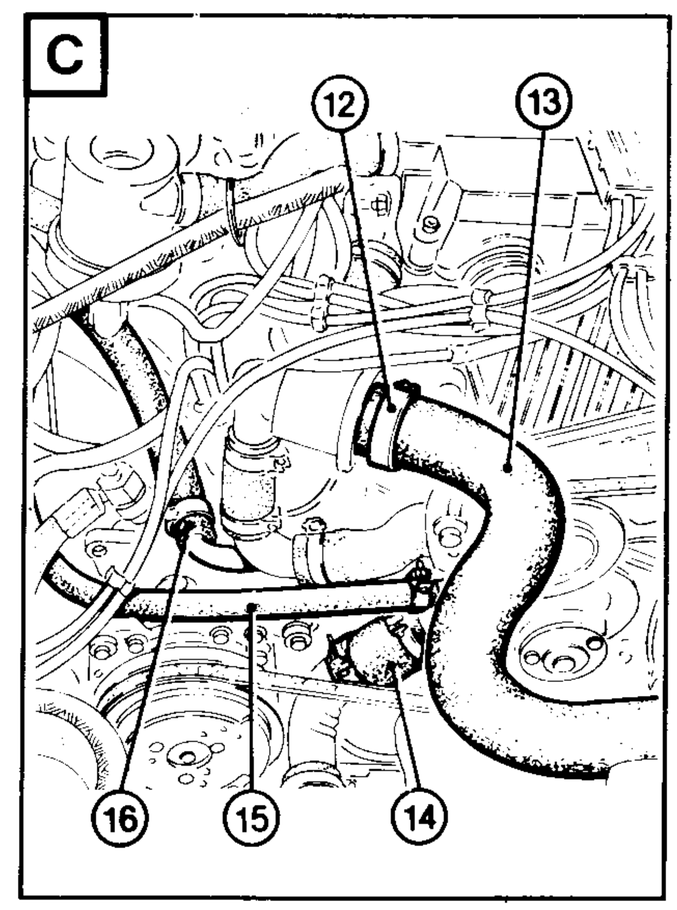

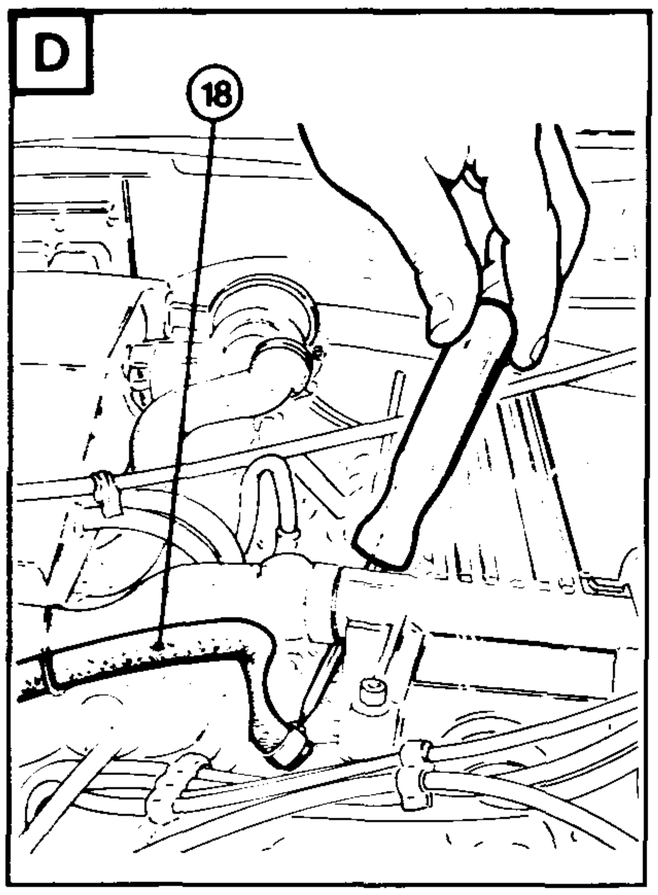
D
18

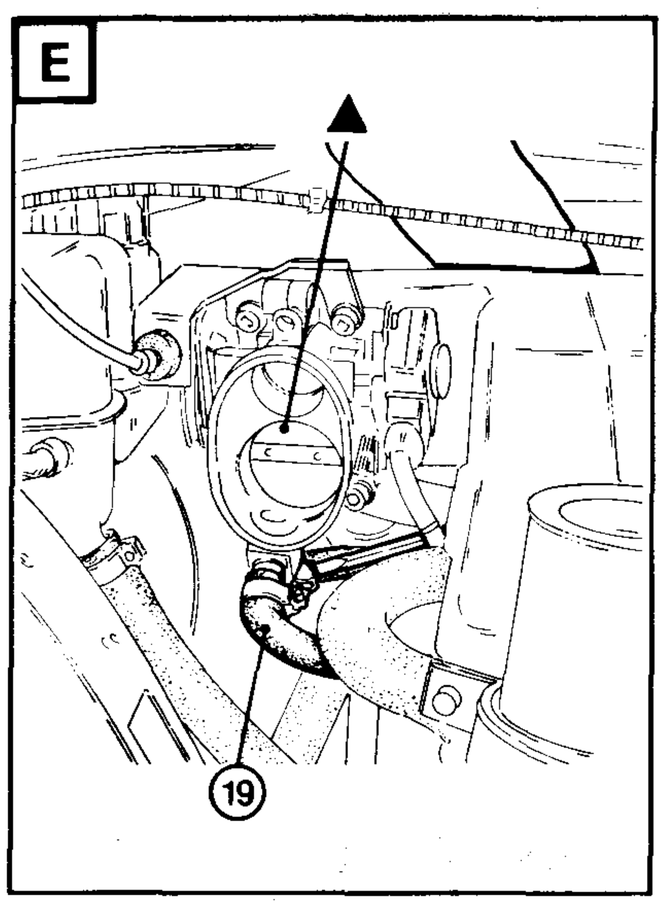
E
19

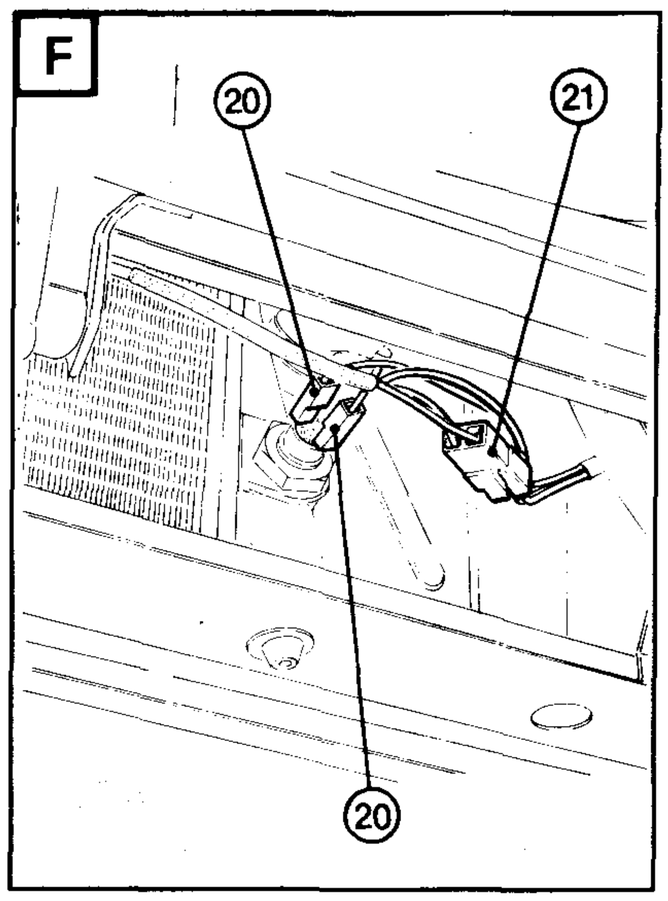
F
20
21
20

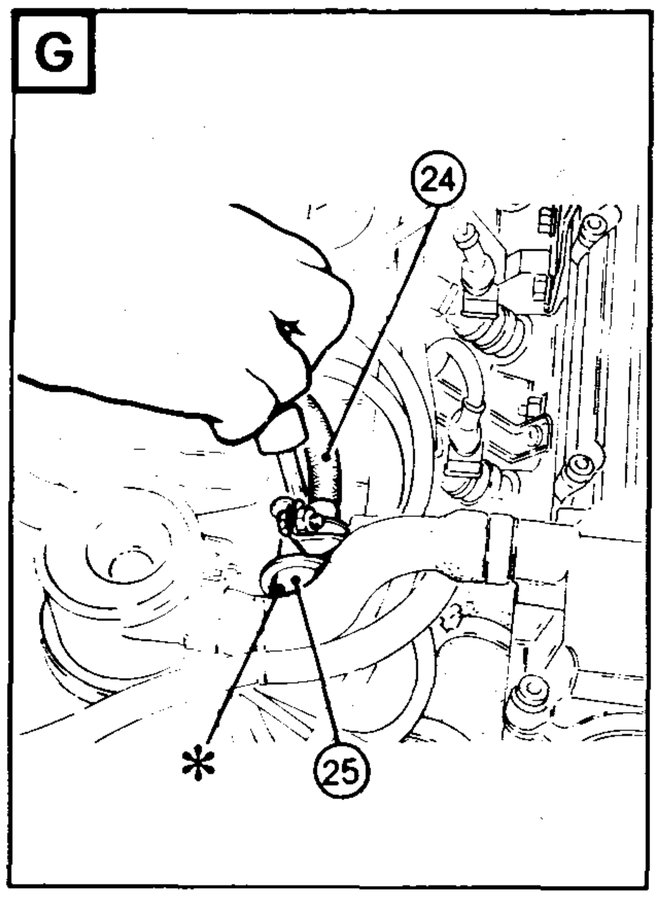
G
24
*
25

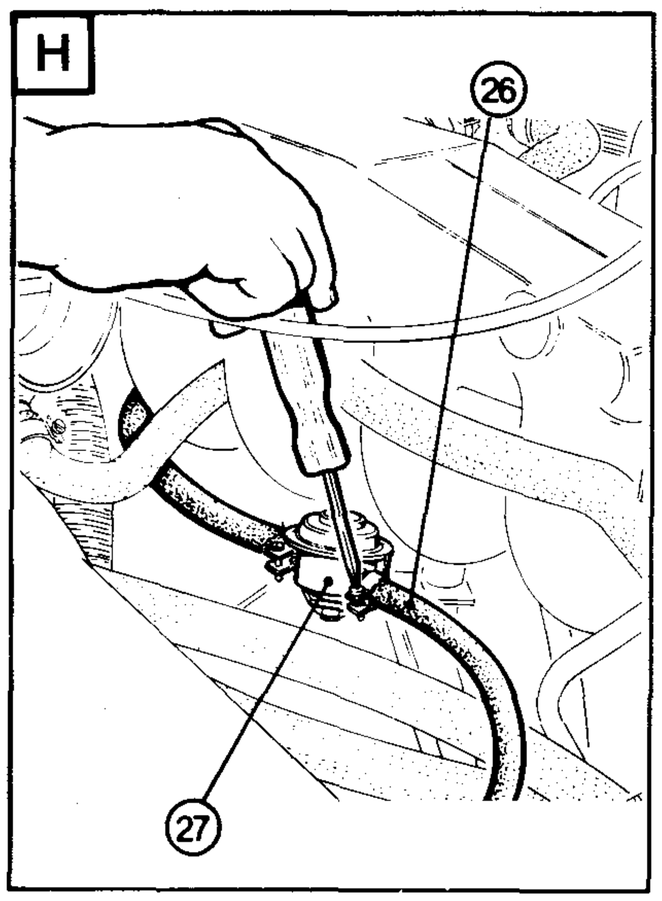
H
26
27

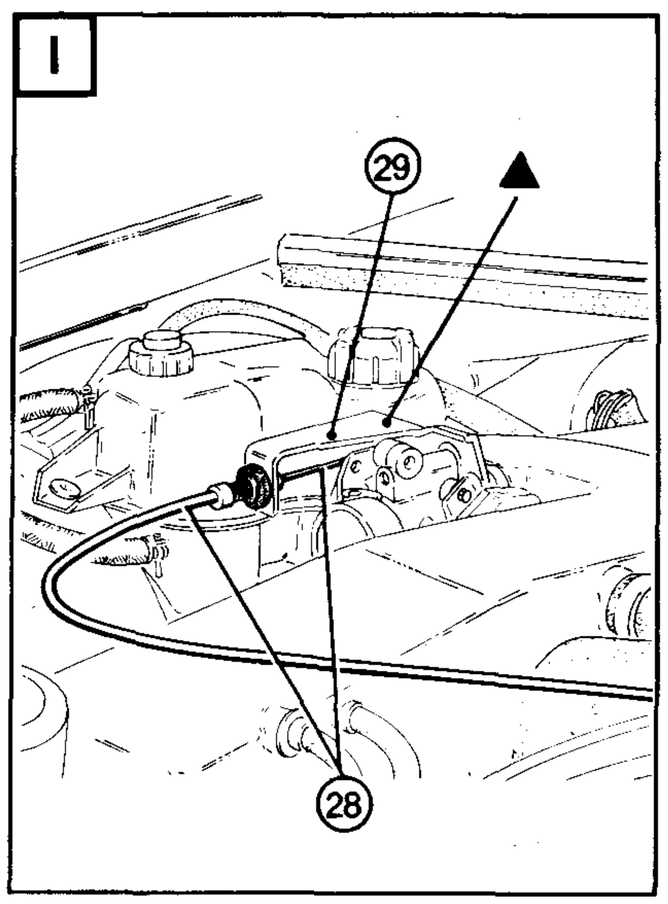
I
29
28

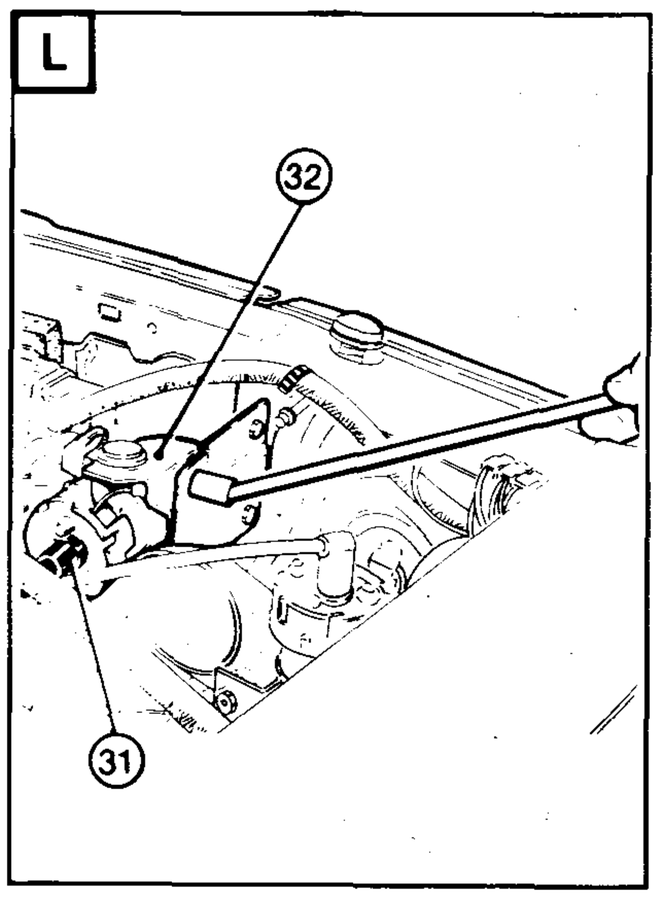
L
32
31

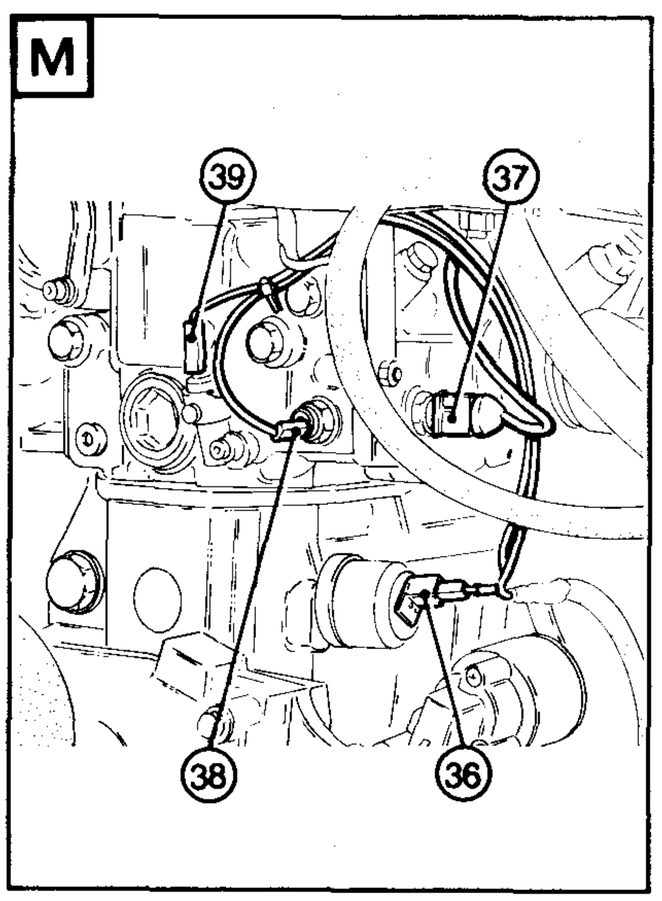
M
39
37
38
36

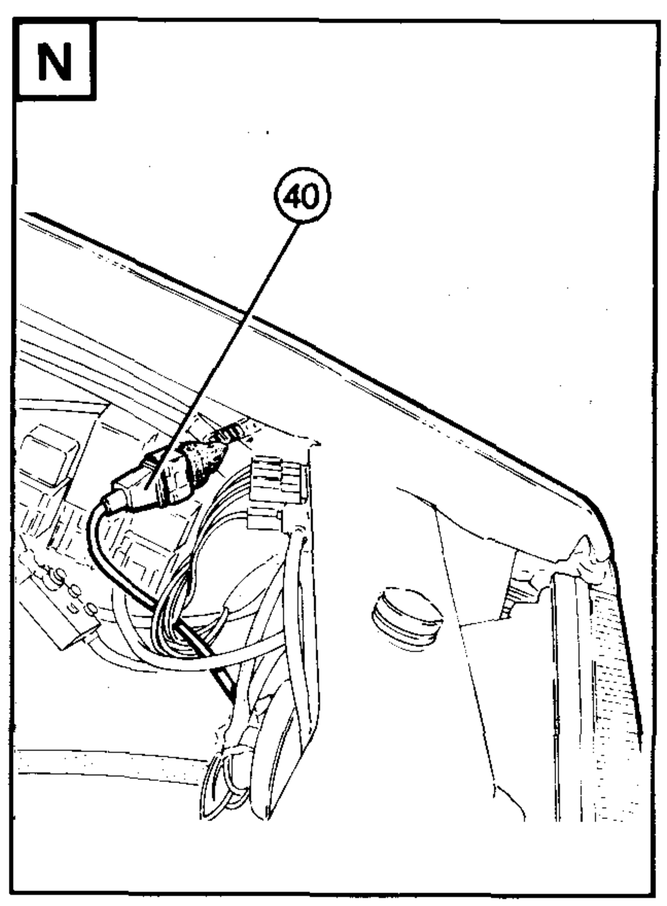
N
40

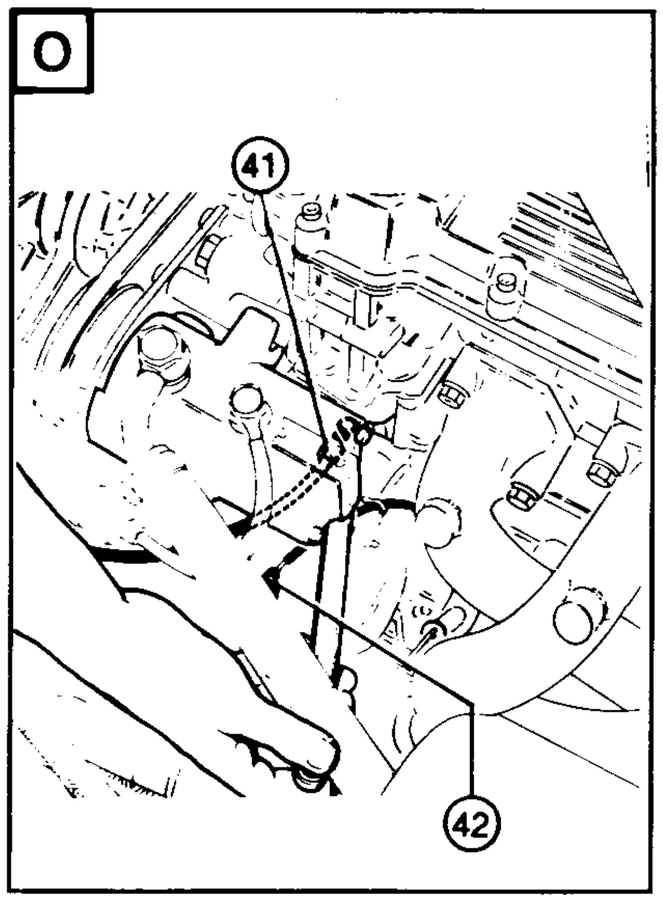

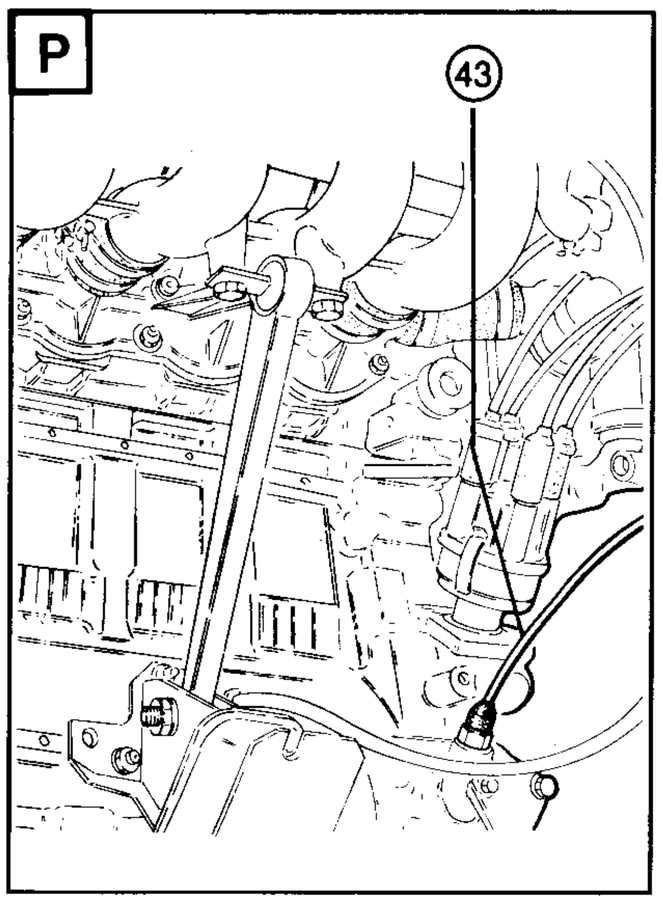

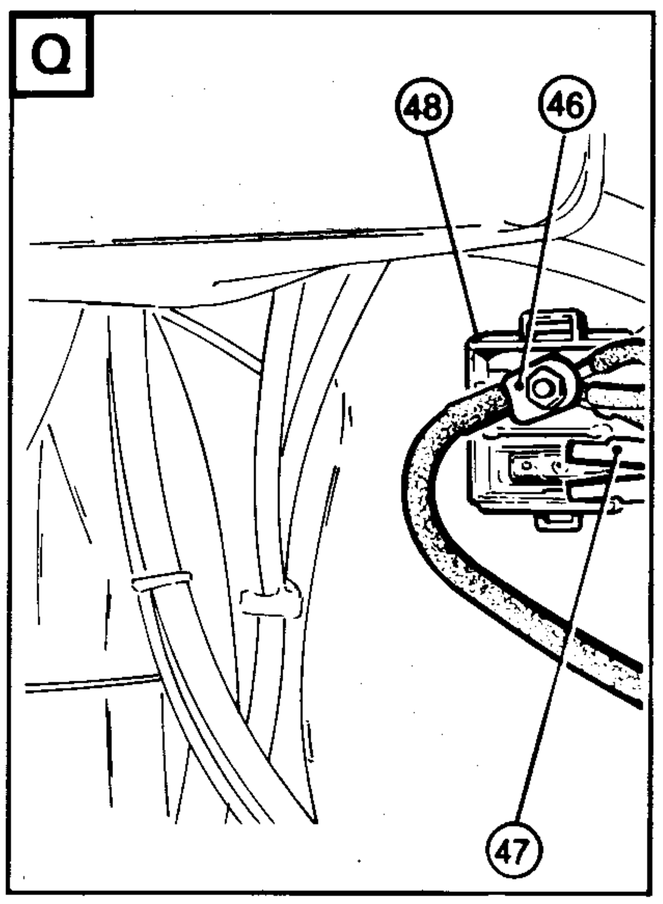

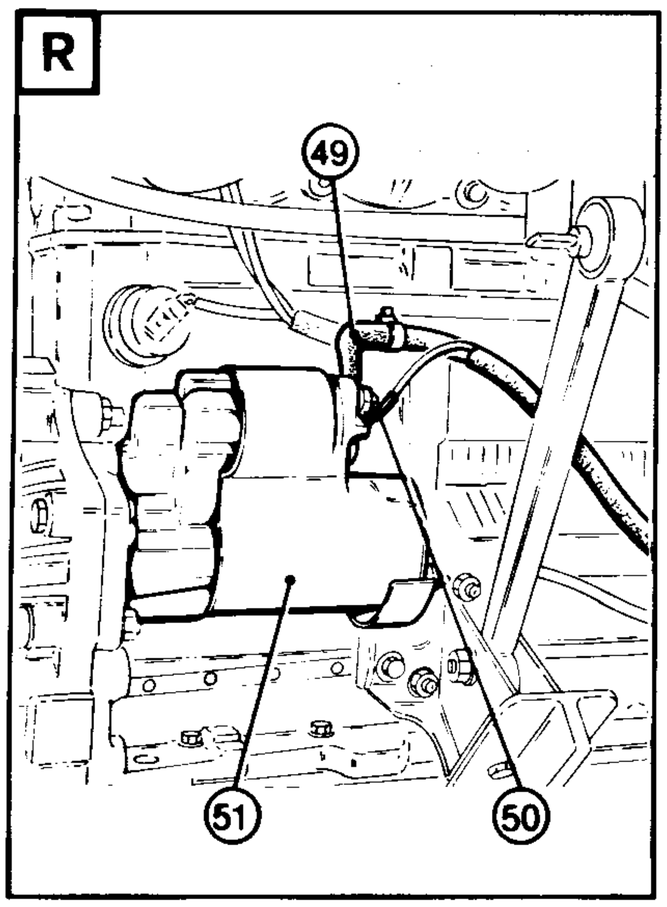

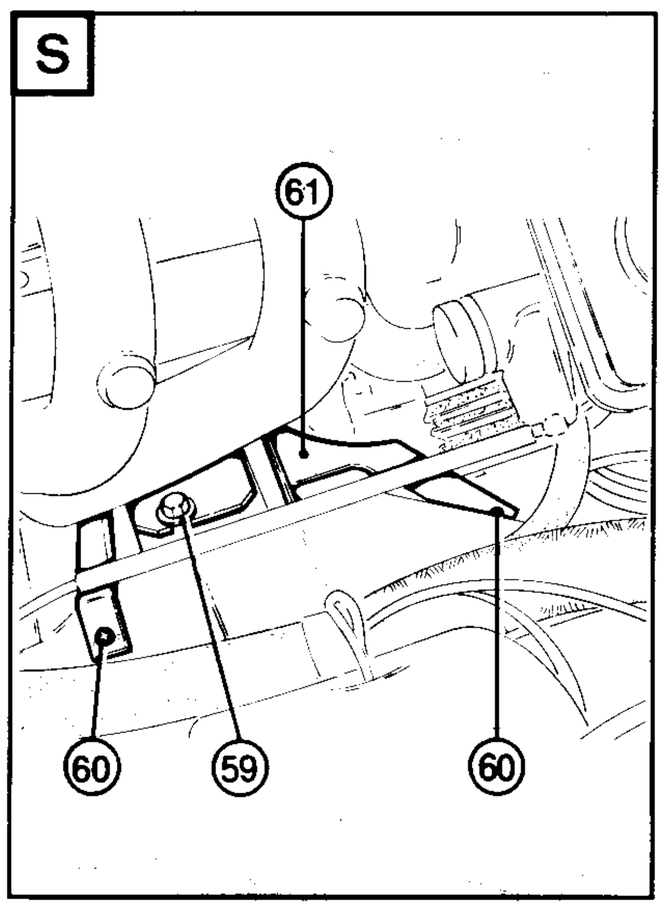

✱ Component location not real

▲ Component aspect not real

1. Battery
2. Servo-brake vacuum intake hose
3. Air flow meter
4. Fast running oil vapour hose
5. Slow running by-pass hose
6. Air intake duct clamp
7. Air intake duct
8. Air intake duct clamp
9. Air filter cover
10. Air filter securing nuts
11. Air filter casing
12. Coolant return sleeve securing clamp
13. Coolant return sleeve
14. Coolant delivery sleeve
15. Coolant return hose
16. Radiator delivery line
17. Radiator breather line
18. Cooling system breather line
19. Heater coolant delivery line
20. Fan control cable
21. Fan supply cable
22. Radiator retaining screw
23. Radiator
24. Fuel return hose
25. Fuel pressure regulator
26. Fuel delivery line
27. Hammering dampner
28. Accelerator control cable
29. Support bracket
30. HT cable ignition coil front spark plugs
31. HT cable ignition coil rear spark plugs
32. Ignition coil for rear spark plugs
33. Butterfly valve cut-out
34. Slow running regulator cable
35. Injection ground cable
36. Engine oil pressure indicator cable
37. Coolant temperature sensor cable
38. Coolant temperature indicator cable
39. Max. temperature coolant warning light cable
40. Revs and phases sensor cable
41. Engine ground cable
42. Connection to minimum engine oil pressure indicator
43. Engine oil minimum pressure indicator cable
44. Phase variator cables
45. Electro-injector feed cables
46. Alternator supply cable
47. Alternator warning light cable
48. Terminal board
49. Starter motor feed cables
50. Starter motor energising cable
51. Starter motor
52. Compressor conditioner
53. Compressor drive belt
54. Belt stretcher pulley
55. Power steering pump drive belt
56. Power steering pump securing screws
57. Power steering pump
58. Power steering system oil tank
59. Upper engine side mount securing screws
60. Heat protection retaining screws
61. Heat protection (on LH mount)

VIEW OF UNDERBODY 75 Twin Spark 2.0

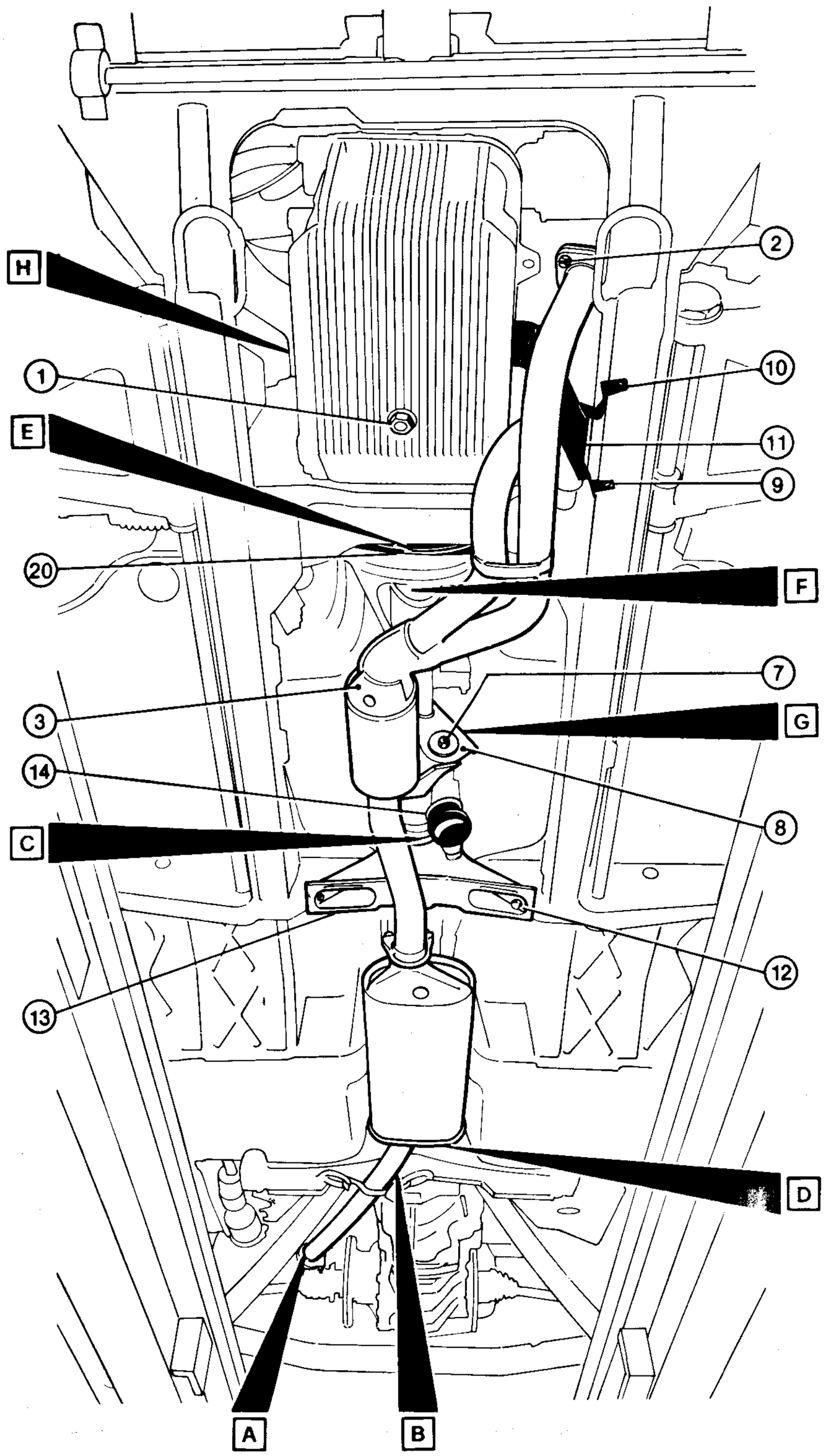

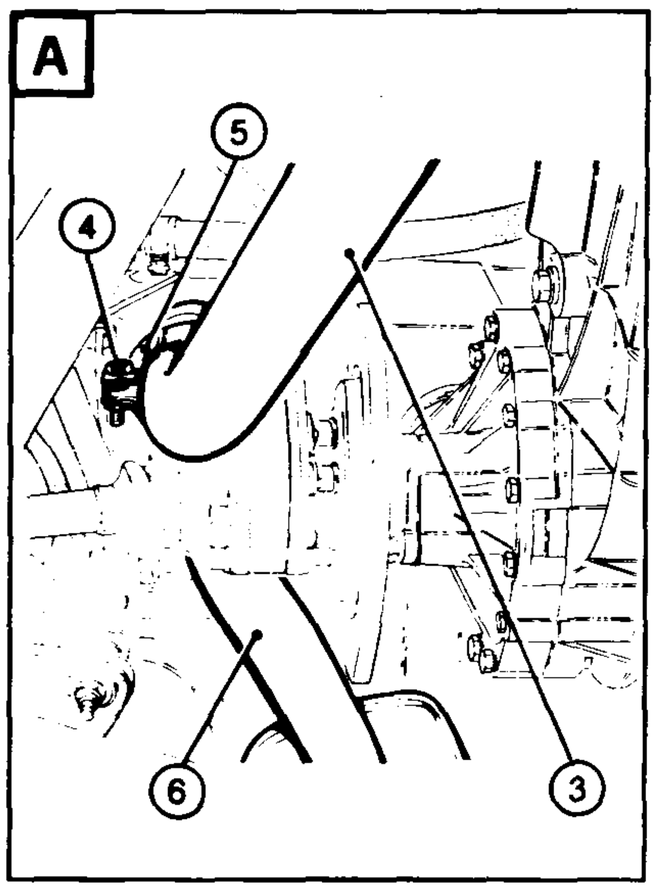

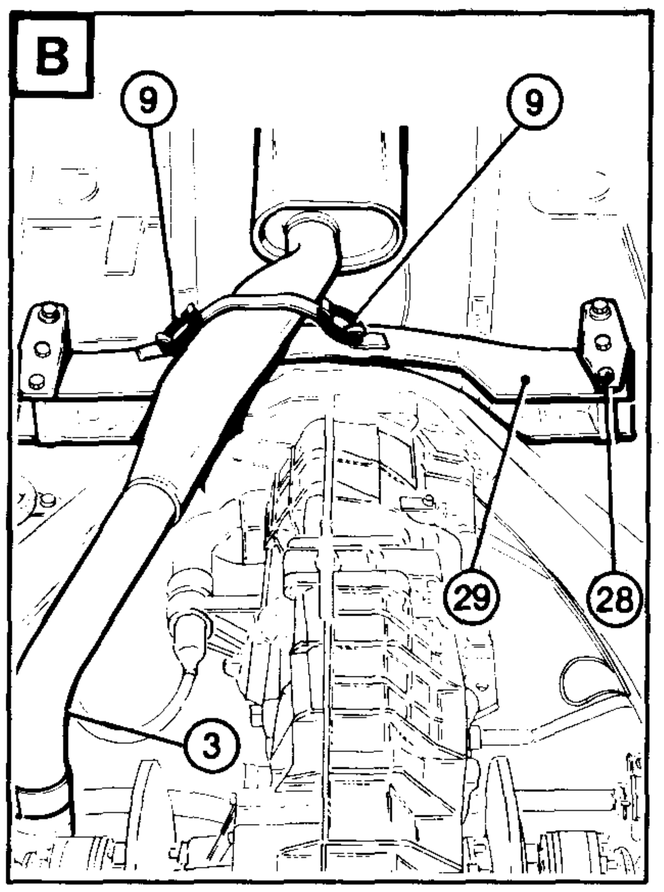

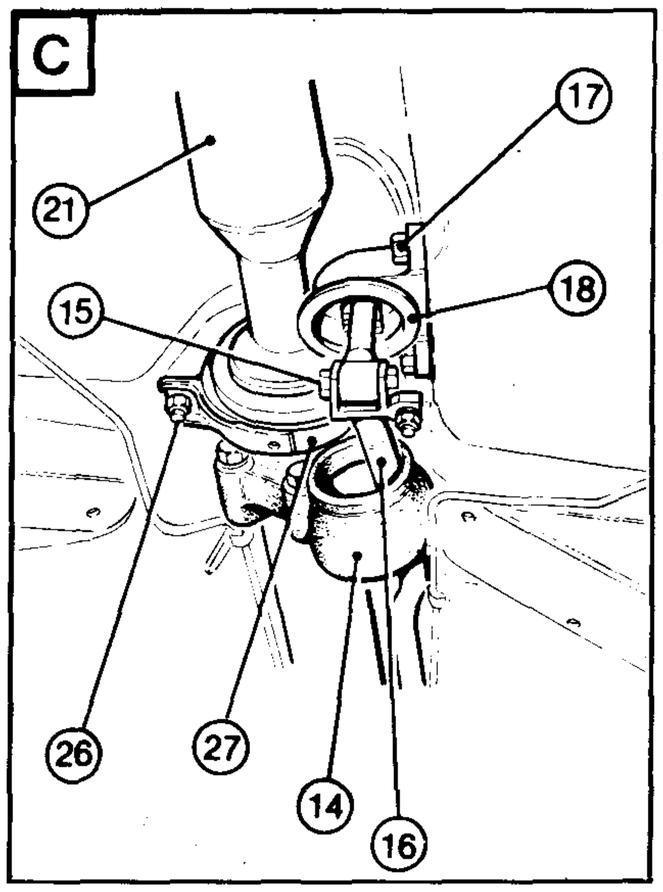

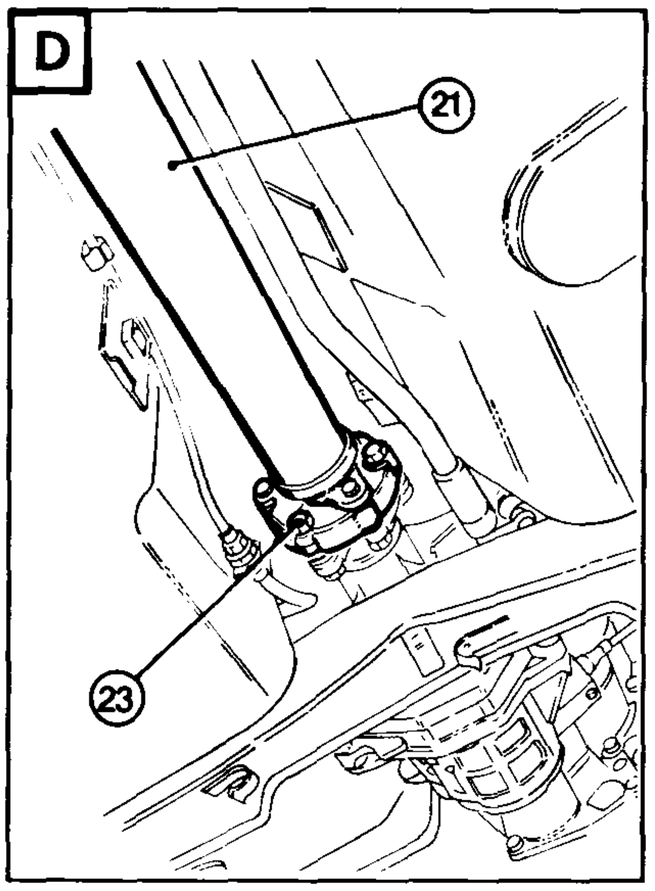

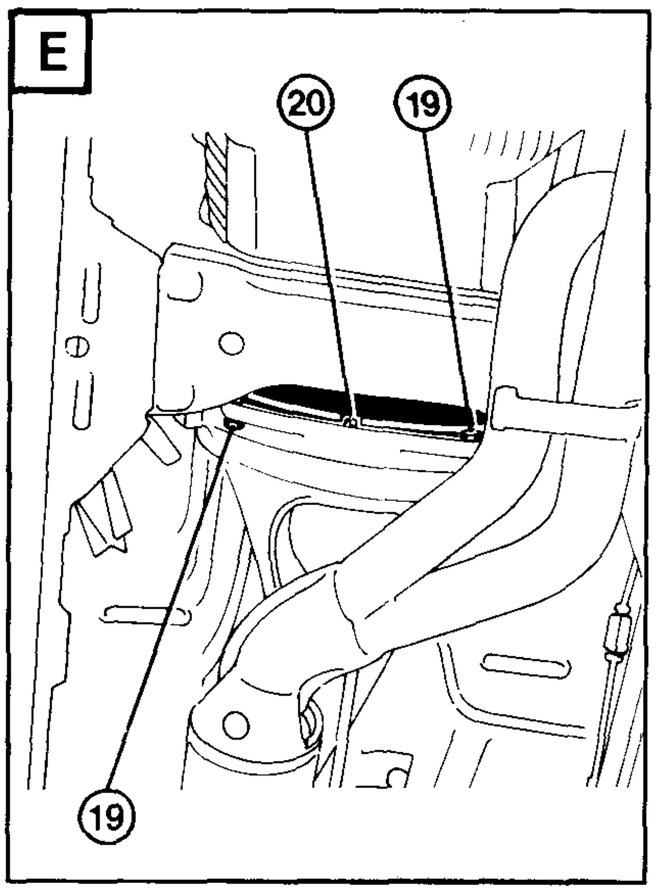

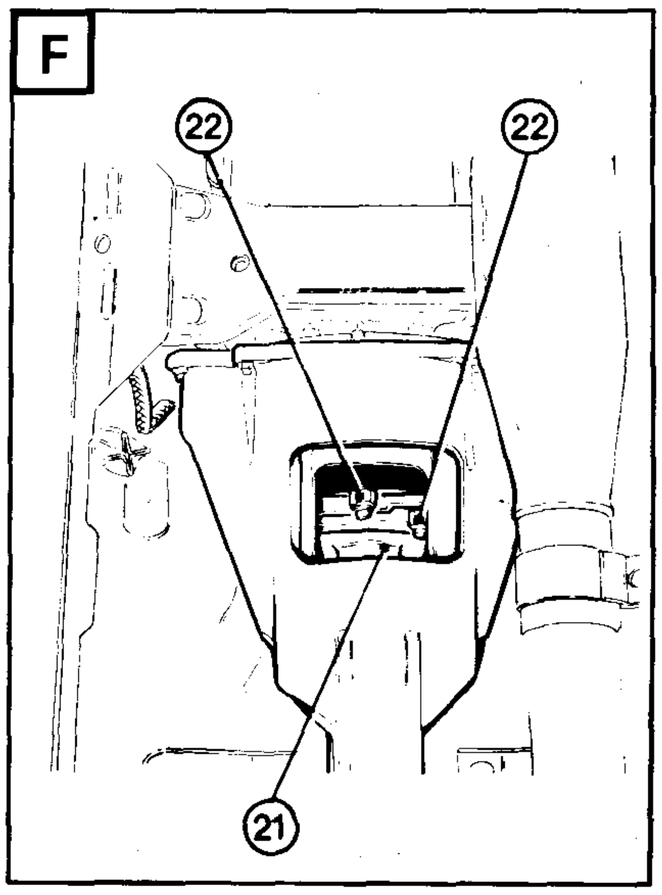

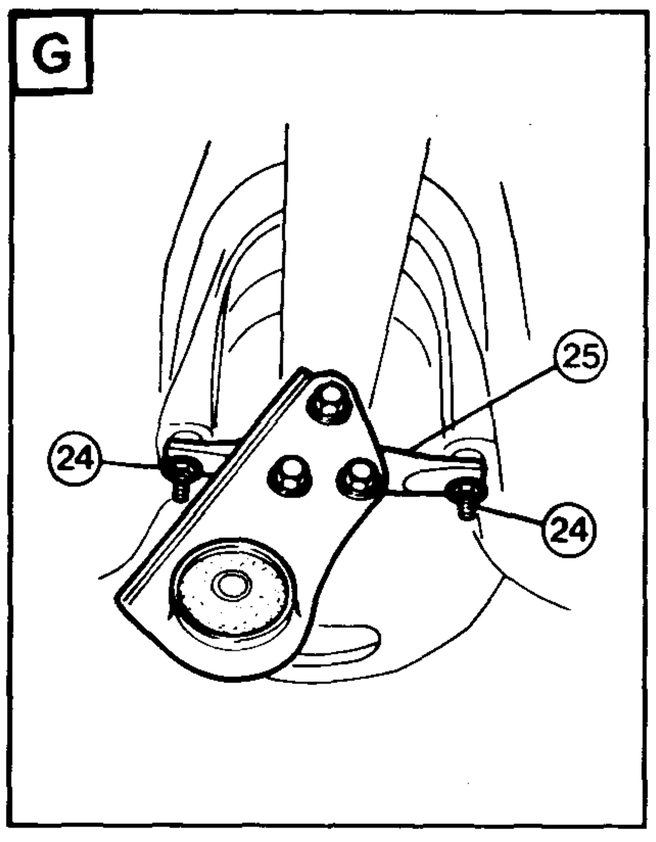

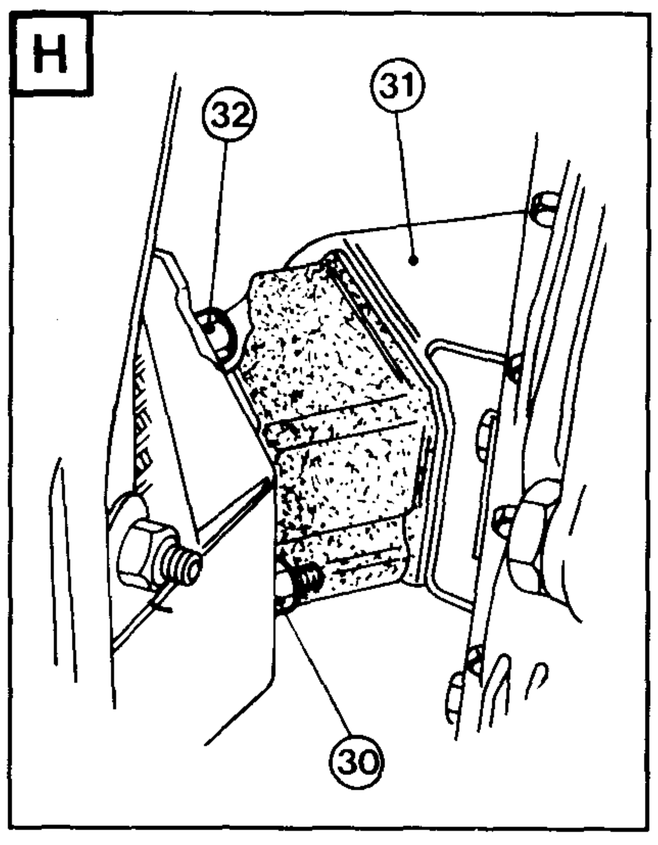

1. Oil drain plug
2. Nuts with washers connecting from exhaust section with exhaust manifold
3. Front section exhaust pipe
4. Clamp securing bolt
5. Clamp
6. Rear section exhaust pipe
7. Bolt securing front section to bracket
8. Front section exhaust support bracket
9. Front section exhaust rubber support rings
10. Heat protection retaining screws
11. Heat protection on LH mount
12. Securing screws for centre section
13. Central section
14. Protection shield
15. Bolt
16. Gear lever
17. Bracket retaining screws
18. Gear lever support
19. Cover retaining bolt
20. Flywheel protection cover
21. Transmission shaft
22. Nuts securing front flexible coupling
23. Bolts securing rear flexible coupling
24. Pin retaining screws
25. Rear engine support pin
26. Securing nuts for central transmission shaft support
27. Central transmission shaft support
28. Retaining screws for rear cross rail
29. Rear cross rail
30. Nuts securing lower part of engine side support
31. Engine side supports
32. Screws securing upper part of engine side support

ENGINE OVERHAUL

NOTE:
This chapter deals with all engine overhaul procedures, including disassembly, checks and inspections and reassembly.
These procedures and the relevant figures refer only to 1.6 , 1.8 and 2.0 carburettor engines as for removal/installation of external components, while overhaul procedures and check-and-inspection specific values apply to all 4-cylinder engines.

Consequently, as far as the parts that do not apply to engines
2.0 iniezione (017.13) and 1.8 turbo
are concerned, we suggest you should refer to the relevant exploded views, which are very useful when removing/installing all external parts characterizing the specific engine.

ENGINE DISASSEMBLY

1.6 1.8 2.0

EXTERNAL COMPONENTS (engine assy)

1. Air cleaner cover
2. Filter element
3. Intake air collector box
4. Twin barrel carburetters
5. Center cushion pad
6. Gasket
7. Side cushion pad
8. Intake manifold
9. Gasket
10. Hot air intake hose
11. Seal
12. Check valve
13. Oil pressure sending unit
14. Seal
15. Starter
16. Gasket
17. Rear cover
18. Coolant drain plug
19. Seal
20. Hot air intake
21. Exhaust manifold, first and fourth cylinders
22. Exhaust manifold, second and third cylinders
23. Gasket
24. Plug
25. Side engine mount
26. Engine oil lever sensor
27. Low engine oil level sending unit
28. Dipstick
29. Oil filter
30. Alternator
31. Drive belt
32. Adjuster bracket
33. Water pump
34. Gasket
35. Fuel pump
36. Gasket
37. Spacer
38. Push rod
39. By-pass hose
40. Ignition distributor
41. Seal
42. Guards
43. Clips
44. Gasket
45. Thermostat manifold
46. Coolant temperature sending unit
47. Cover with thermostat
48. Seal
49. Tie rod
50. Ground cable

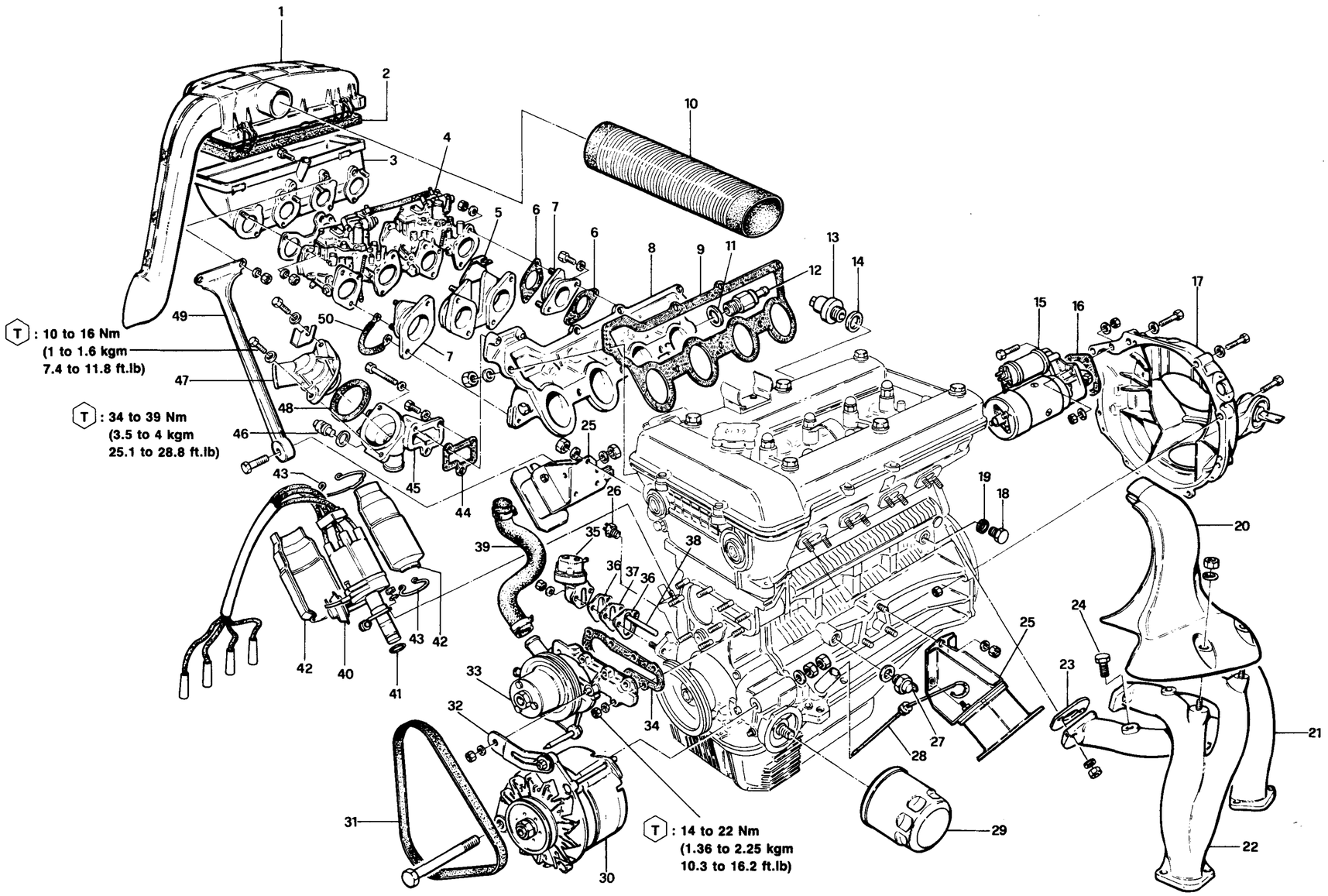

EXTERNAL COMPONENTS (cylinder head and engine block)

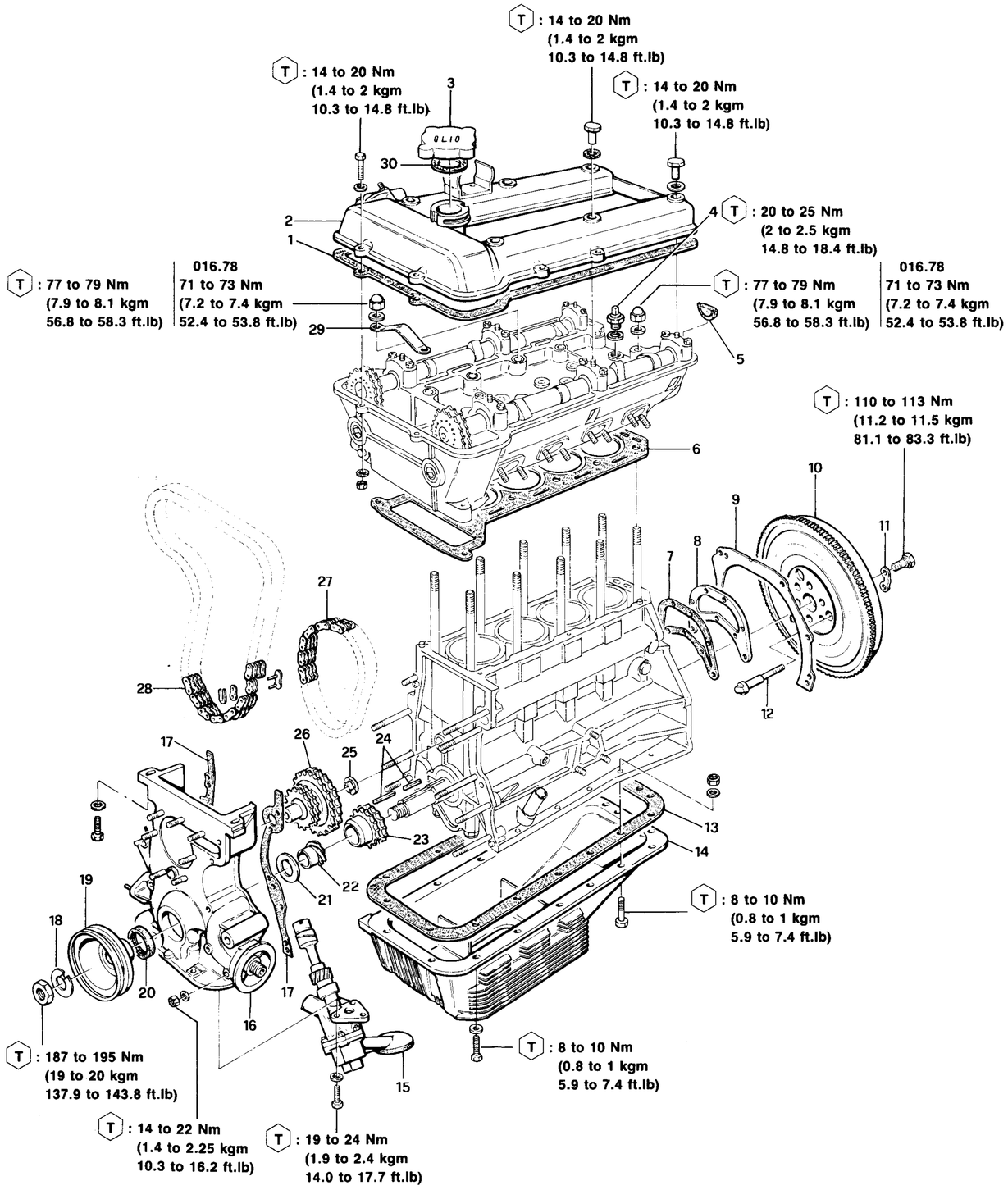

1. Camshaft cover gasket
2. Camshaft cover
3. Oil filler cap
4. High coolant temperature sending unit
5. Oil seals
6. Cylinder head gasket
7. Rear cover seal
8. Rear cover
9. Spacer
10. Flywheel
11. Lockwasher
12. Propeller shaft retaining screw
13. Oil pan gasket
14. Oil pan
15. Oil pump
16. Front cover
17. Front cover gasket
18. Lockwasher
19. Crankshaft pulley
20. Seal
21. Metal oil seal
22. Oil pump/distributor drive pinion
23. Pinion
24. Key
25. Thrust washer
26. Gear
27. Chain
28. Camshaft drive chain
29. Lift bracket
30. Gasket

INTERNAL COMPONENTS (engine block and cylinder head)

1. Cylinder liner
2. Seal
3. Engine block
4. Top compression ring
5. Bottom compression ring
6. Oil control ring
7. Piston
8. Piston ring
9. Retaining ring
10. Connecting rod
11. Screw
12. Main bearing halves (10 off)
13. Connecting rod bearing halves (8 off)
14. Thrust ring halves (4 off)
15. Crankshaft
16. Rear seal
17. Rear main bearing cap
18. Seal
19. Main bearing caps (4 off)
20. Nut
21. Lockwasher
22. Washer
23. Gear
24. Flange
25. Woodruff key
26. Camshaft
27. Camshaft caps
28. Cylinder head
29. Chain tensioner screw
30. Spring
31. Plate
32. Chain tensioner sprocket
33. Tappet
34. Valve tip cup
35. Retainer lock
36. Spring cap
37. Inner spring
38. Outer spring
39. Shim
40. Spring cap
41. Exhaust valve guide
42. Exhaust valve seat insert
43. Exhaust valve
44. Seal
45. Intake valve guide
46. Intake valve seat insert
47. Intake valve
48. Screw
49. Self locking nut
50. Connecting rod cap

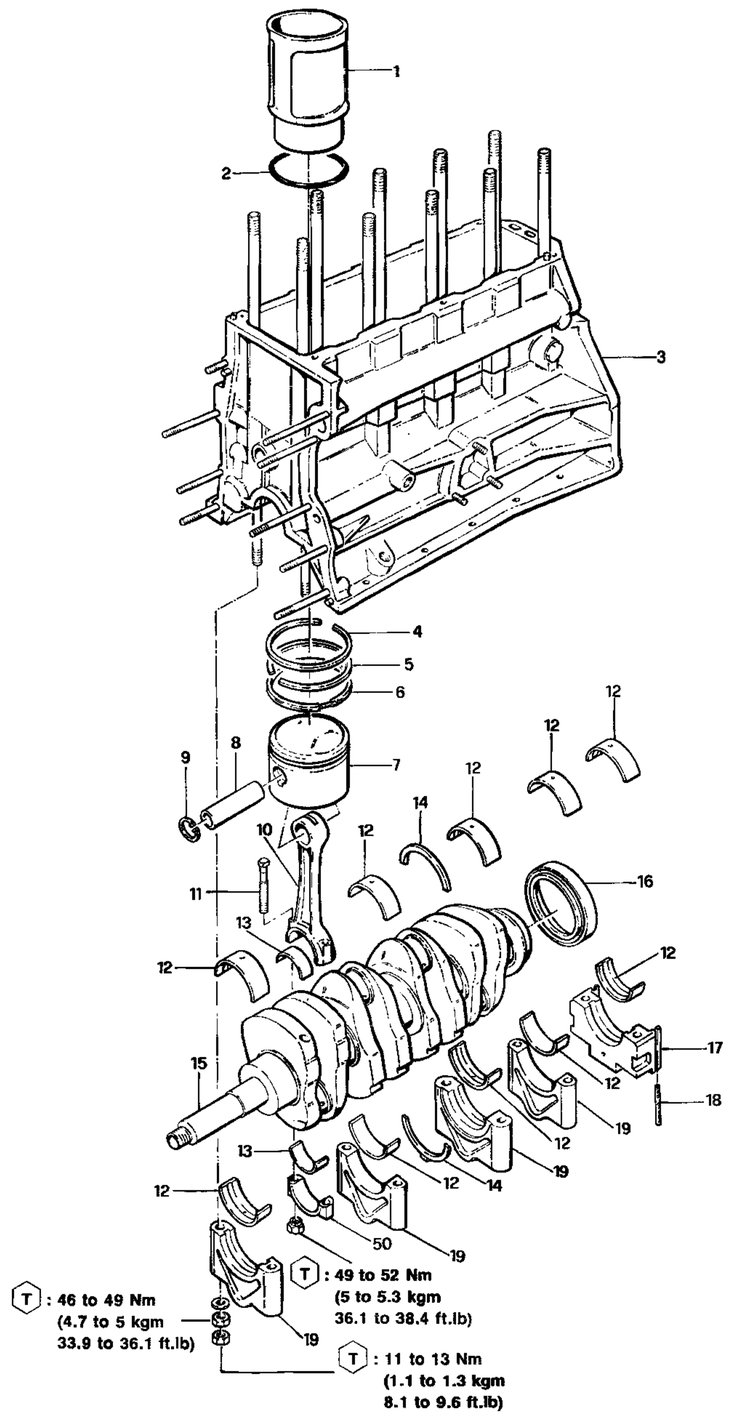

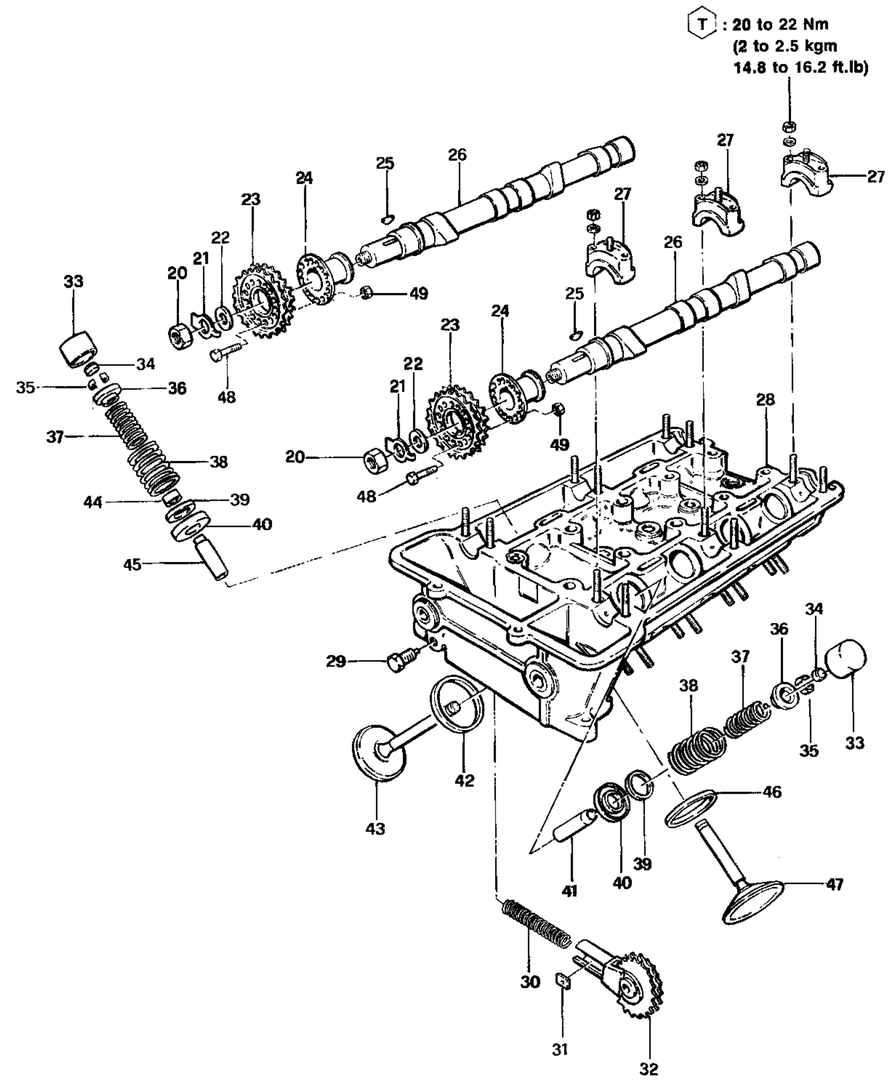

2.0 Motronic 2000 ENGINE (017.13) (differences with respect to standard engine)

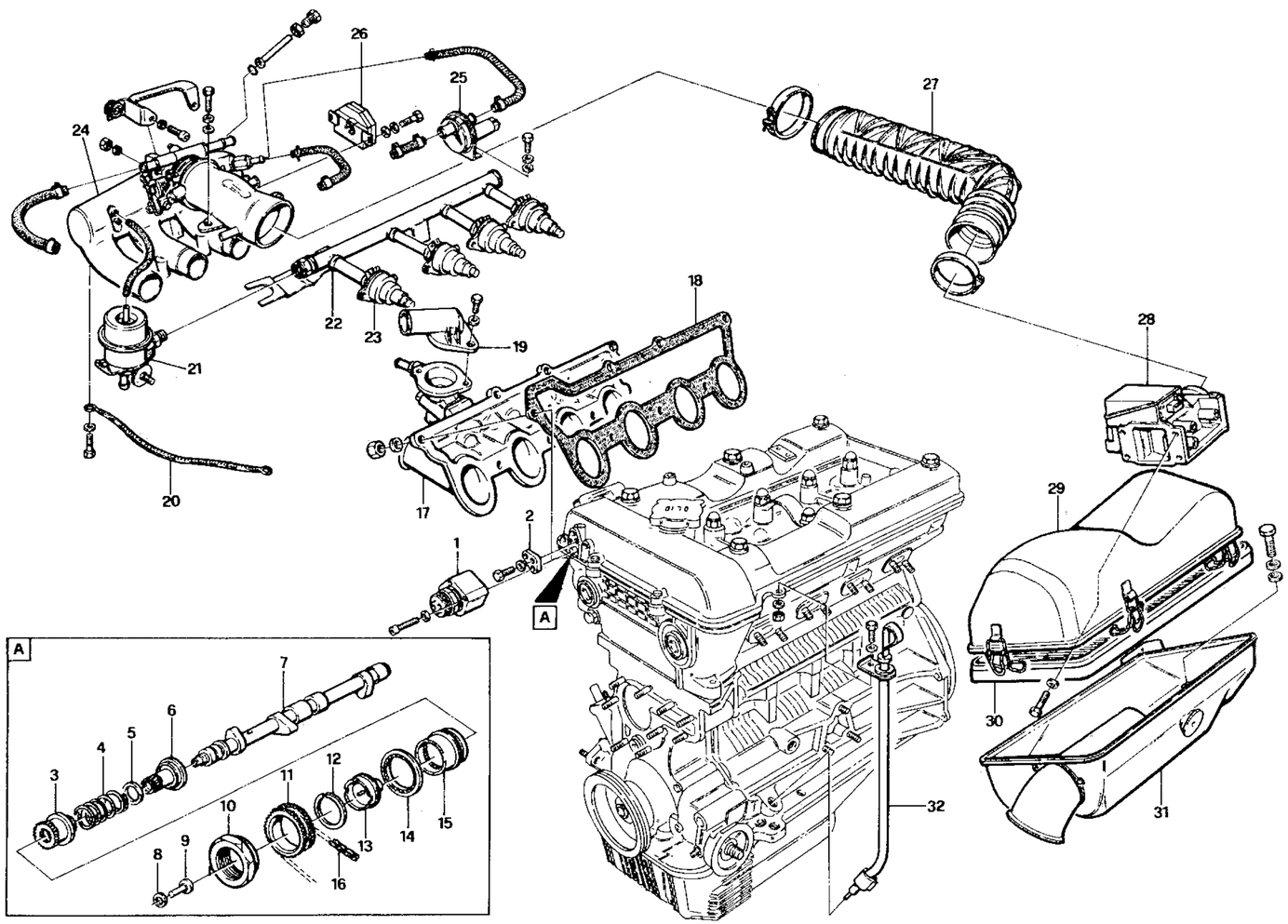

1. Support with solenoid
2. Plate
3. Piston
4. Spring
5. Washer
6. Helical pinion support sleeve
7. Camshaft
8. Seal
9. Actuator
10. Lockring
11. Timing chain sprocket
12. Retaining ring
13. Cover with variator control valve
14. Front dog clutch
15. Sleeve
16. Timing chain
17. Intake manifold
18. Gasket
19. Cover with thermostat
20. Ground cable
21. Fuel pressure regulator
22. Fuel rail
23. Electroinjectors
24. Throttle body
25. Auxiliary air valve
26. Idle/WOT contact
27. Air duct
28. Air flow sensor
29. Air cleaner cover
30. Filter element
31. Air intake
32. Dipstick

ENGINE 1.8 turbo (061.34) (EXTERNAL-PART VARIATIONS)

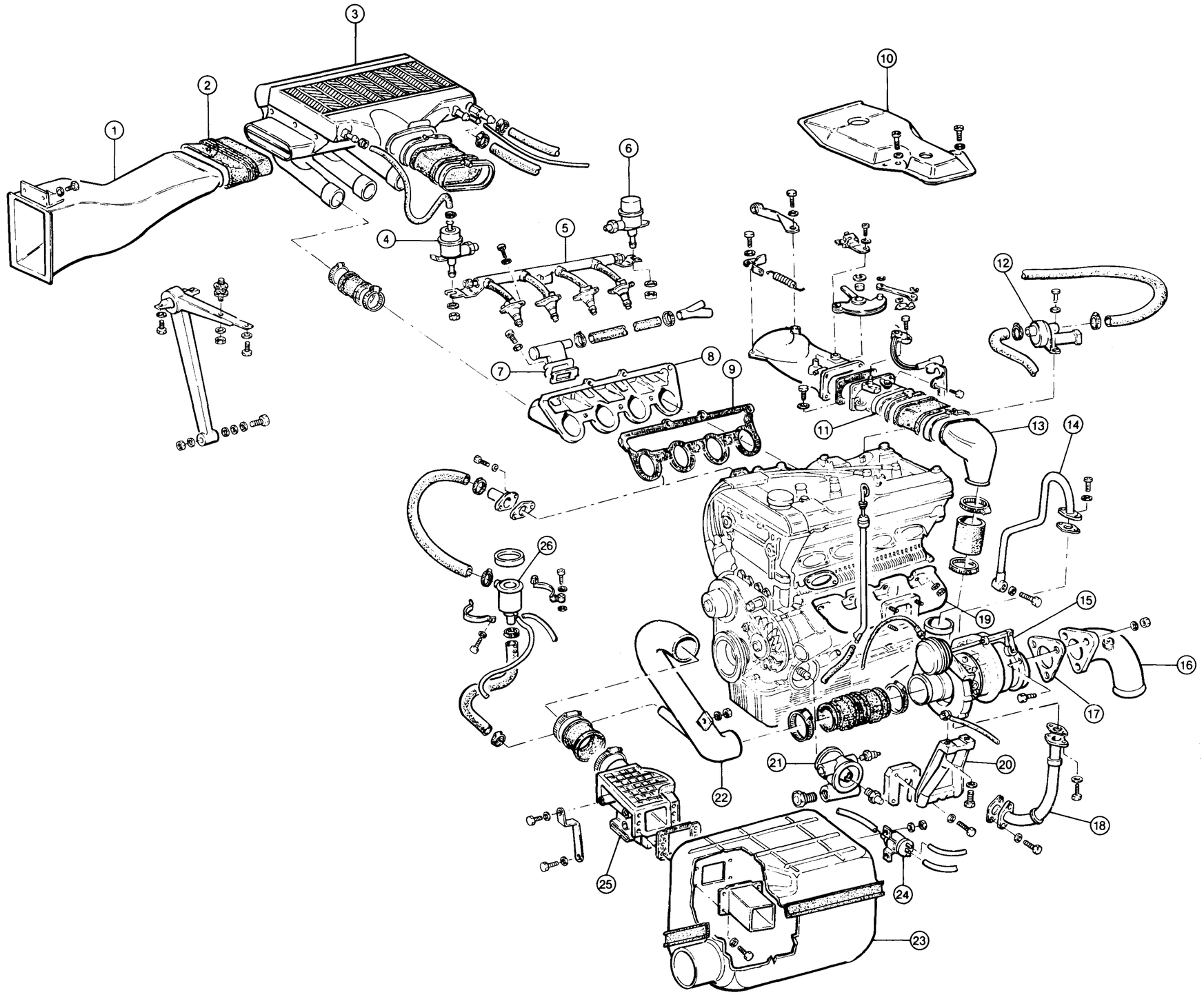

1. Intercooler air intake duct
2. Sleeve
3. Intercooler
4. Fuel pressure regulator
5. Fuel distributor pipe with injectors
6. Damper
7. Engine cooling-system liquid manifold
8. Intake manifold
9. Gasket
10. Protection shield
11. Throttle-valve body
12. Additional air valve
13. Elbow
14. Oil delivery duct to turbocharger
15. Turbocharger
16. Turbocharger exhaust elbow
17. Gasket
18. Oil return pipe to turbocharger
19. Exhaust manifold
20. Turbocharger support
21. Oil filter support
22. Air intake duct
23. Air filter housing
24. Turbochaging pressure control solenoid valve
25. Air flow meter
26. Oil vapour sedimenter

FOREWORD

a. Remove engine from vehicle as described under «Engine Removal and Installation».

b. Prepare engine for installation on revolving overhaul stand and support with a suitable hydraulic lift.

SUBASSEMBLY REMOVAL

a. Back off nuts (1) and washers from screws (2) retaining starter (3) to rear cover (4) and support (5).
Remove starter (3) with associated shim.

b. Back off screws (6) and remove rear cover (4) from engine.

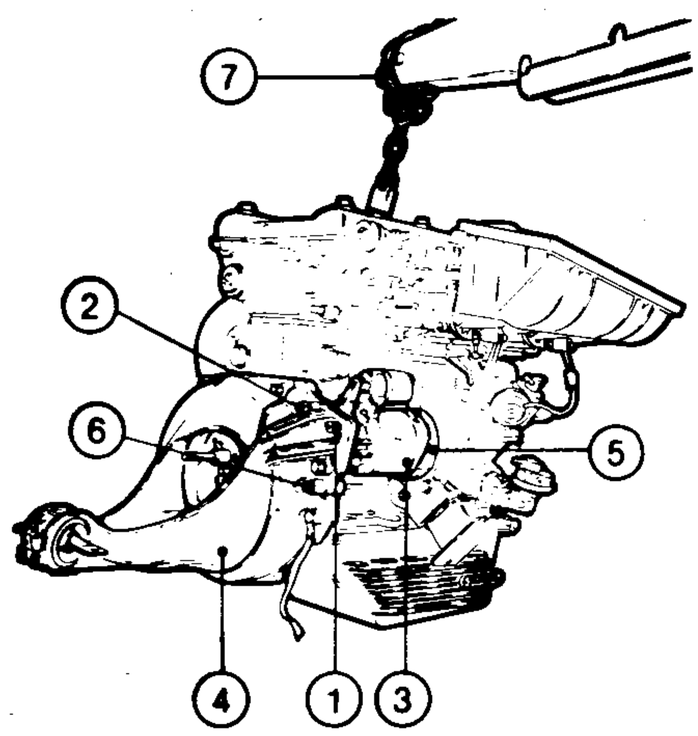

1. Nuts and washers
2. Screws
3. Starter
4. Rear cover
5. Support
6. Screws
7. Hydraulic lift

c. Back off two screws retaining carburetters support tie rod (1) to air cleaner case (2) and bolt (3) retaining tie rod to engine mount. Remove tie rod (1).

d. Back off nuts (4) and remove engine mounts (5) on both sides of engine block.

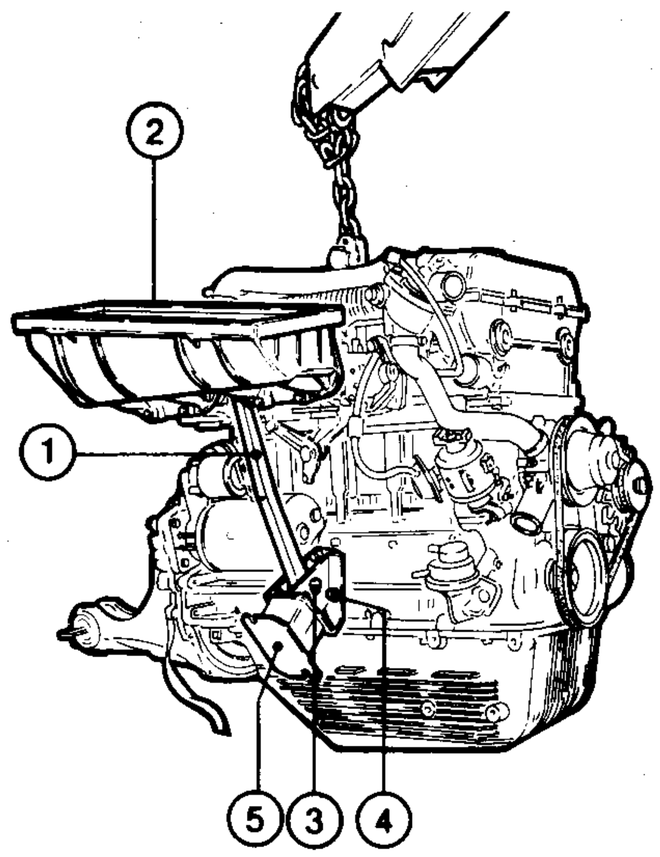

1. Tie rod
2. Air cleaner case
3. Bolt
4. Nuts
5. Engine mount

e. Install brackets (1) and, using hydraulic lift, position engine on revolving overhaul stand (2).
Secure brackets (1) to supports (3) through bolts (4).

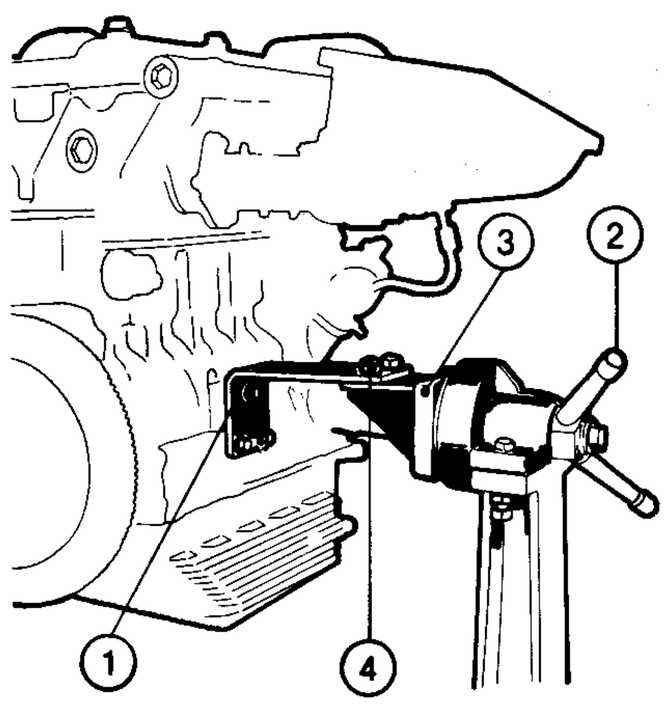

1. Bracket
2. Revolving overhaul stand
3. Support
4. Bolts

f. Remove nuts and washers (1) securing warm air intake (2) to exhaust manifolds (3).
Remove two bolts (4) from camshaft cover and take off warm air intake (2).

g. Back off nuts and washers (5) securing manifolds (3) to cylinder head, and remove exhaust manifolds together with associated gaskets.

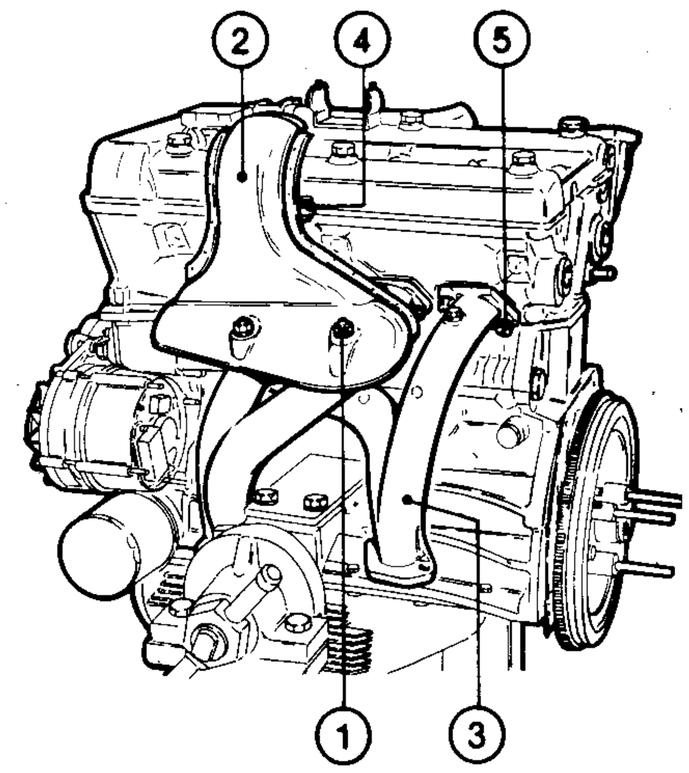

1. Nuts and washers
2. Warm air intake
3. Exhaust manifolds
4. Bolts
5. Nuts and washers

h. Remove dipstick.
Remove drain plug from oil pan and drain engine oil if this has not already been done during engine removal.

i. Install a suitable flywheel (1) rotating tool (2) over studs.

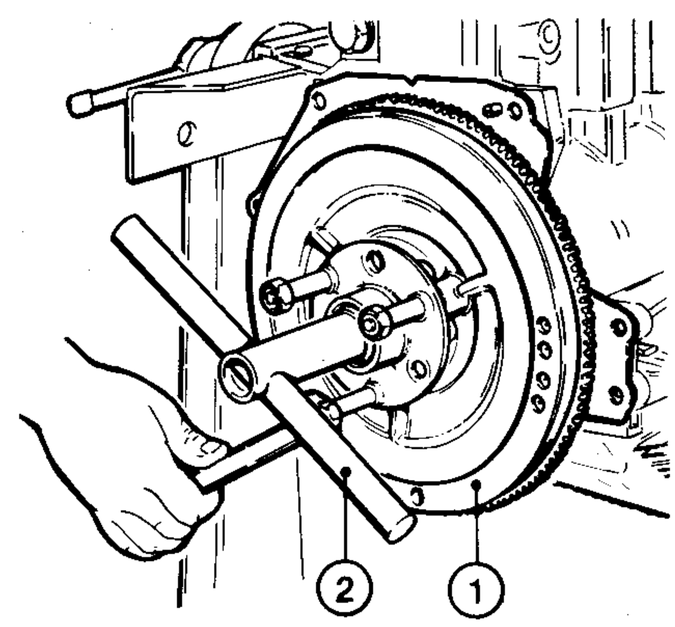

1. Flywheel
2. Rotating tool

j. Remove oil filter (1) using a suitable wrench.

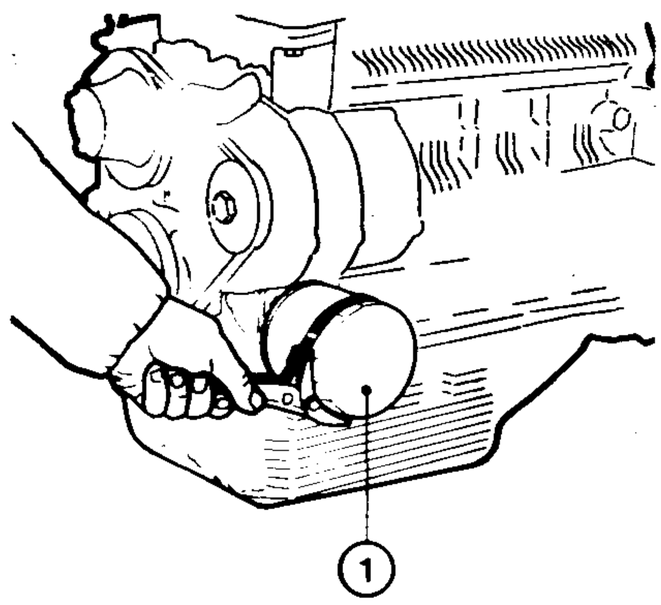

1. Engine oil filter

k. Slacken screws on clips (1) and disconnect coolant by-pass hose (2) from thermostat fitting (3) and water pump fitting (4).

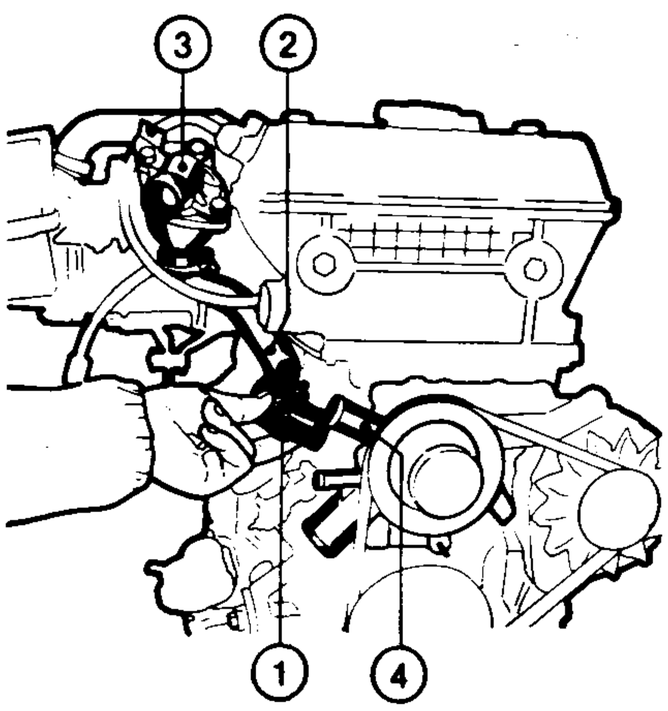

1. Clips
2. Coolant by-pass hose
3. Thermostat
4. Water pump fitting

l. Loosen nuts (1) and (2) and bolt (3), move alternator (4) towards engine and remove V-belt (5).
Remove bolt (3) and nut (1) and take off alternator (4) together with adjuster bracket (6).

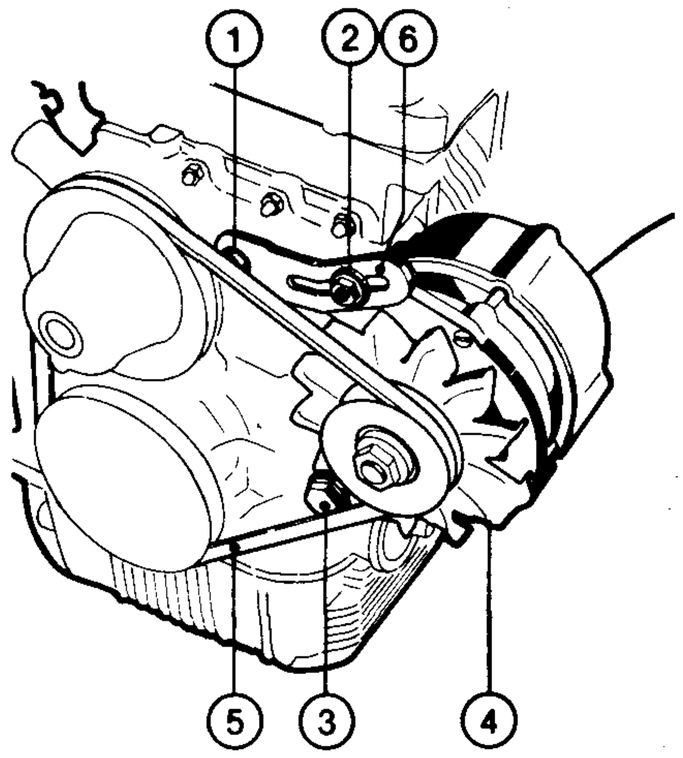

1. Nut
2. Nut
3. Bolt
4. Alternator
5. V-belt
6. Adjuster bracket

m. Slacken screws on clips (1) and disconnect crankcase vapour line (2) and oil vapour recirculation line (3) from fitting on camshaft cover.
Disconnect vacuum line (4) from distributor advance device.

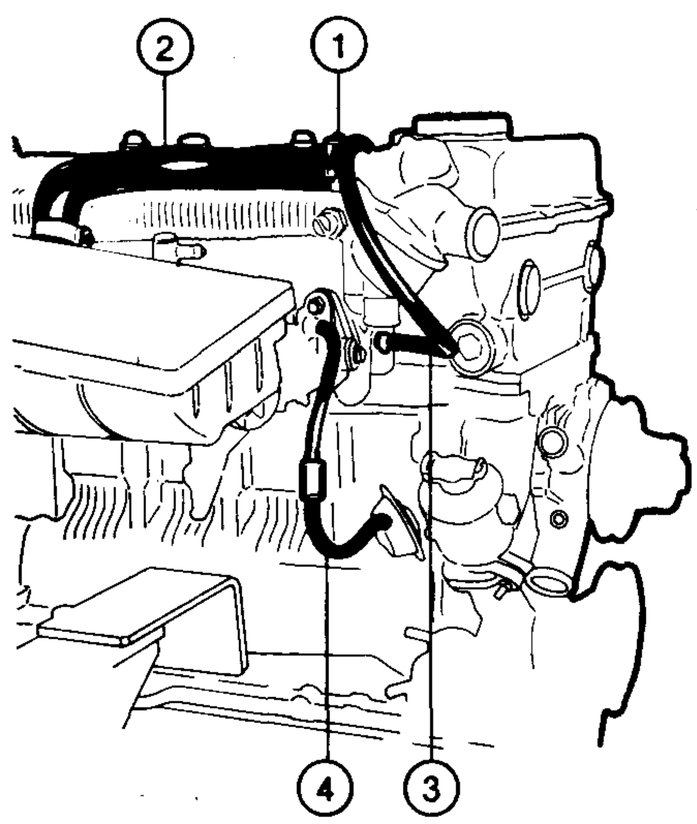

1. Clips
2. Crankcase vapour line
3. Oil vapour recirculation line
4. Vacuum line

n. Slacken nuts with washers retaining intake manifold to cylinder head and remove manifold/collector box assembly (1).

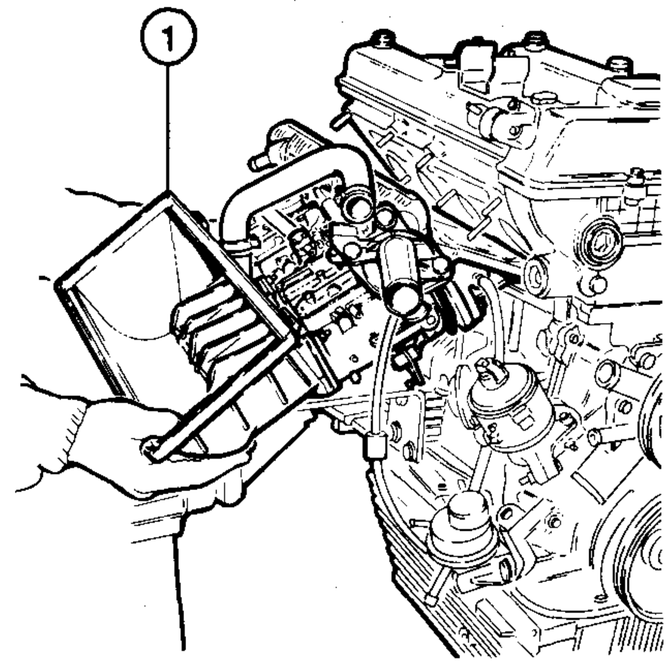

1. Manifold/collector box assembly

CYLINDER HEAD REMOVAL

a. Remove knobs and seals (1).
Slacken bolts (2) (from front side) retaining camshaft cover (3) to cylinder head.
Remove camshaft cover with associated gasket.

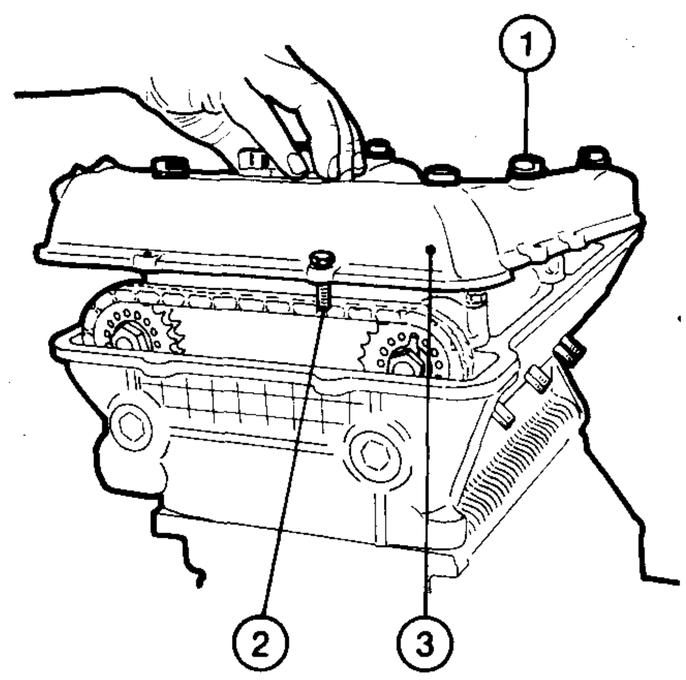

1. Knobs and seals
2. Bolts
3. Camshaft cover

b. Remove spark plugs (1) using a suitable wrench.
Remove high coolant temperature sending unit (2) from cylinder head.

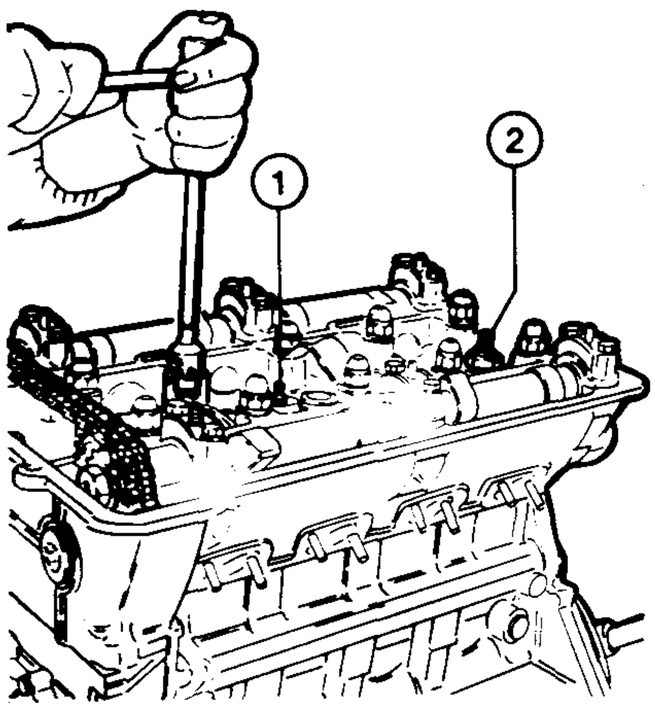

1. Spark plugs
2. High coolant temperature sending unit

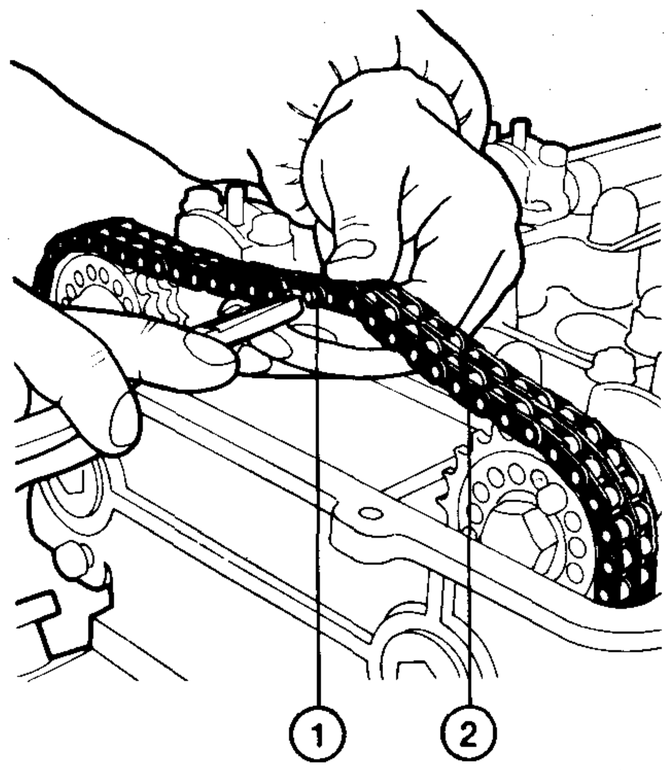

1. Master link
2. Chain

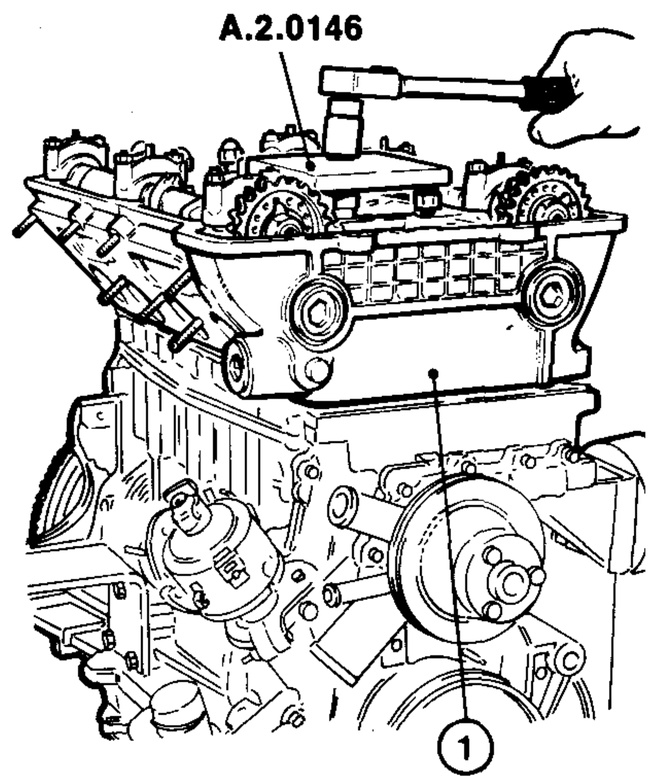

1. Cylinder head

c. Rotate crankshaft until timing chain master link (1) is positioned as shown below.
Slacken chain tensioner screw (2), press chain (3) downward to overcome tensioner spring load, and tighten screw (2) to lock tensioner in this position.

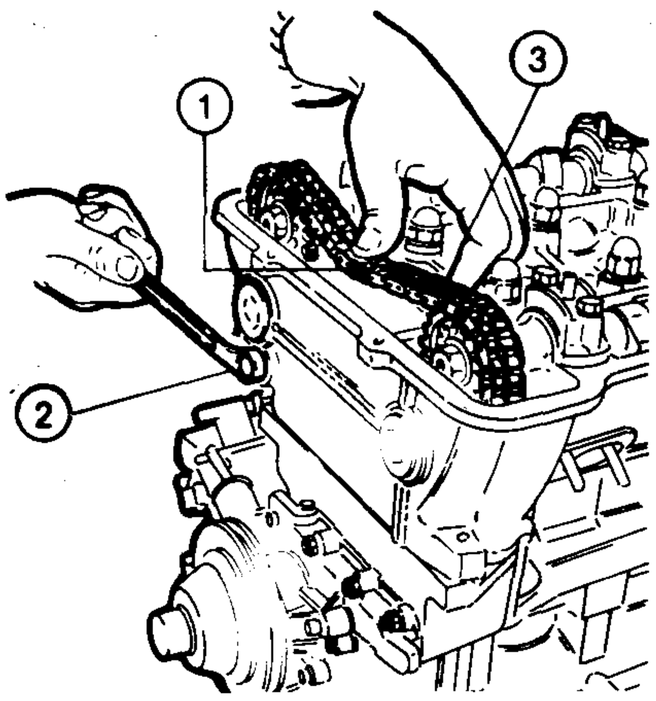

1. Master link
2. Chain tensioner screw
3. Chain

d. Remove master link (1) from chain (2).
Free chain from camshaft gears and allow to slide toward bottom of engine block.

e. Remove nuts with washers (1).
Slacken screws (2) retaining cylinder head to engine block, and remove lift bracket (3).
Back off engine oil pressure sending unit (4).

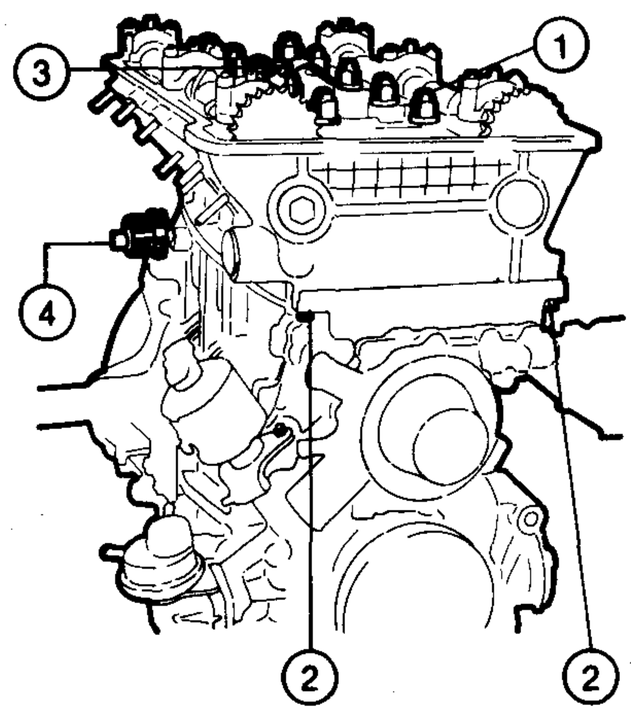

1. Nuts and washers (10 off)
2. Screws
3. Lift bracket
4. Oil pressure sending unit

f. Position tool **A.2.0146** as shown so that cylinder head can be removed from engine block without withdrawing cylinder liners.
g. Remove cylinder head (1), taking care not to damage engine block studs.
Remove gasket.

ENGINE BLOCK COMPONENT REMOVAL

a. Install cylinder liner retainers **A.2.0117** over block studs as shown, and secure using cylinder head nuts (1).
Remove timing chain through block aperture (2).

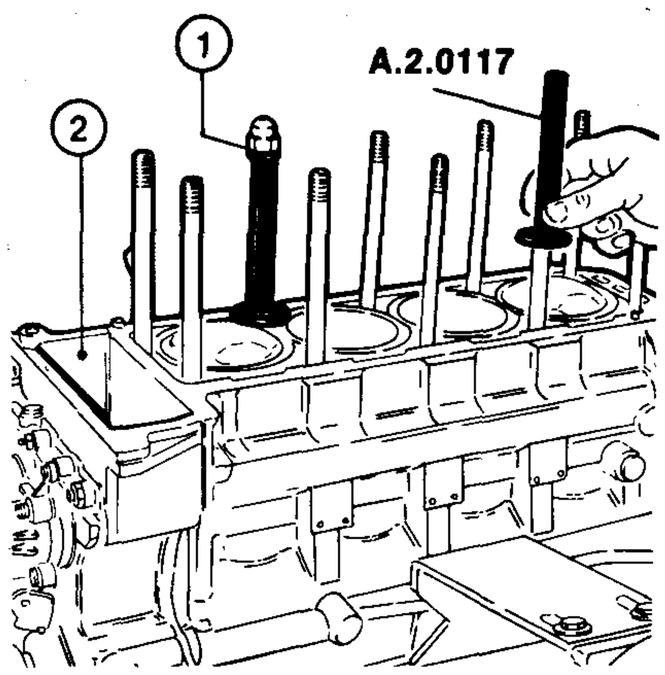

1. Cylinder head nuts
2. Aperture

b. Back off nut (1) retaining distributor base plate (2) to front cover.
Remove distributor (3) and seal.

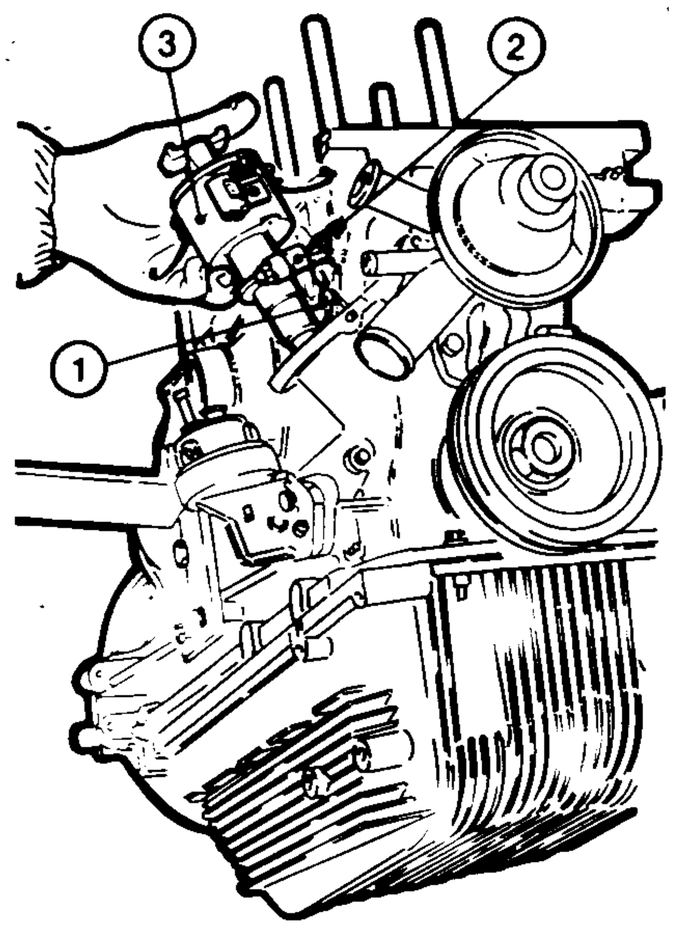

1. Nut
2. Base plate
3. Distributor

c. Back off nuts and washers retaining fuel pump (1) to front cover.
Remove pump (1), gasket (2), spacer (3) and pushrod (4).

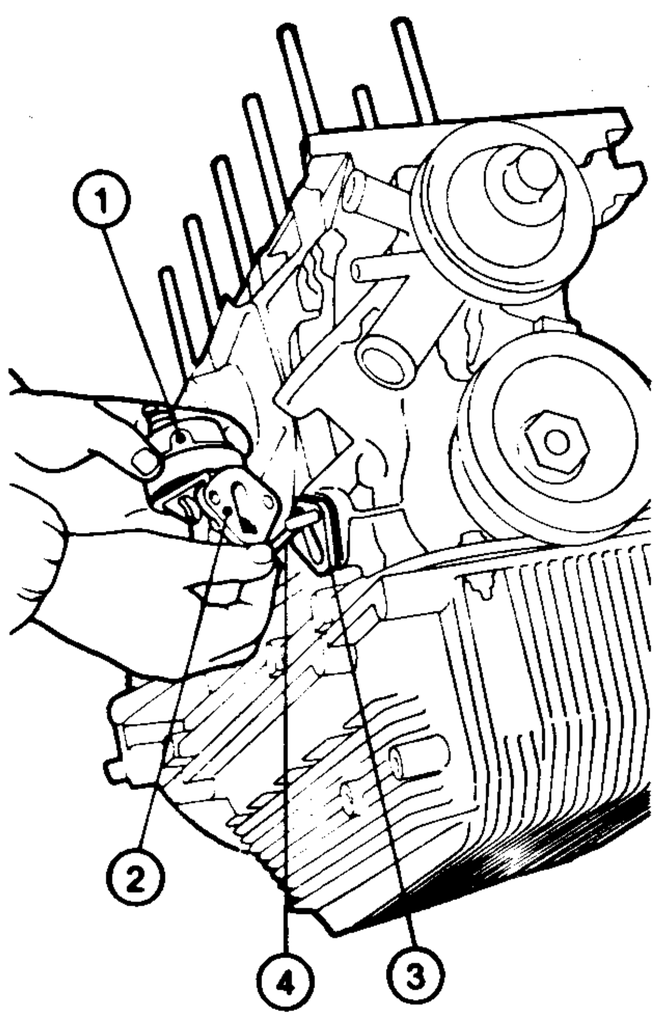

1. Fuel pump
2. Gasket
3. Spacer
4. Pushrod

d. Release overhaul stand and overturn engine. Back off screws and bolts retaining oil pan (1) to engine block.
Remove oil pan (1) and associated gasket (2).
Clean any traces of sealant on oil pan or block.

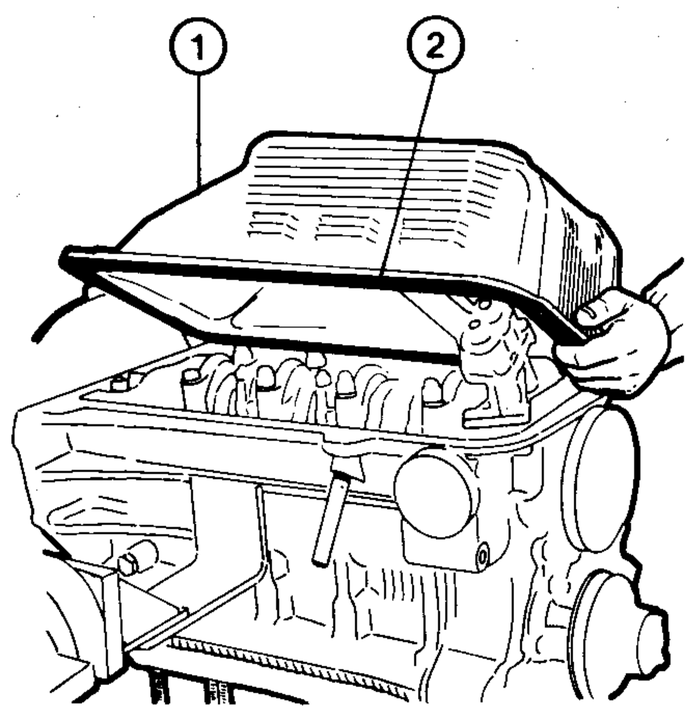

1. Oil pan
2. Gasket

e. Remove screws and washers retaining oil pump (1) to front cover.
Withdraw oil pump through top of cover and retrieve seal.

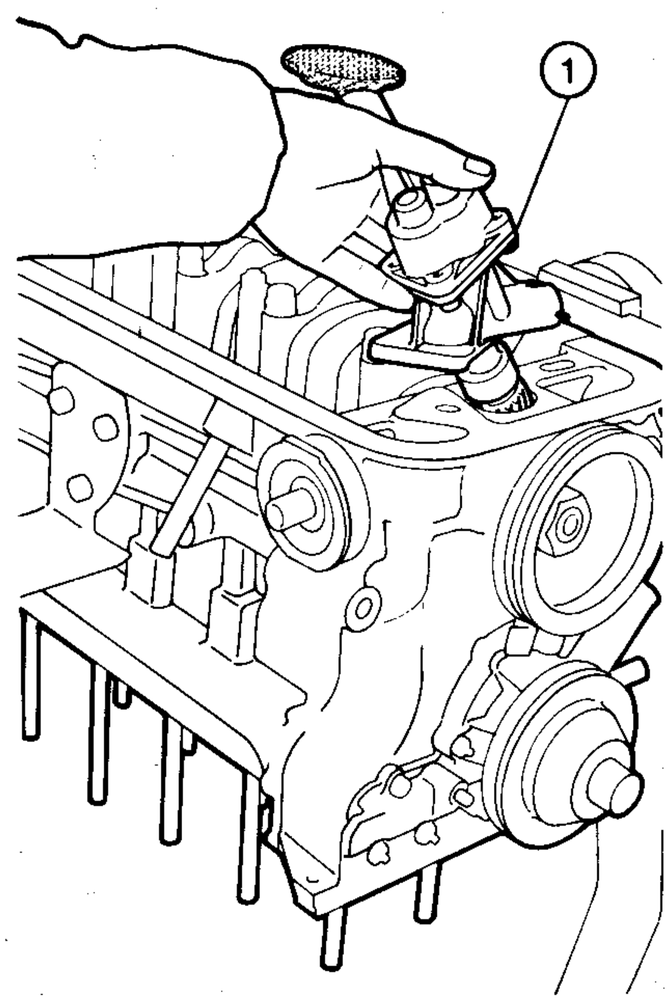

1. Oil pump

NOTE:
For oil pump disassembly and overhaul, see paragraph «Lubrication System».

f. Turn crankshaft until connecting rod cap nuts (1) are accessible.
g. Back off nuts (1) and remove connecting rod caps (2).

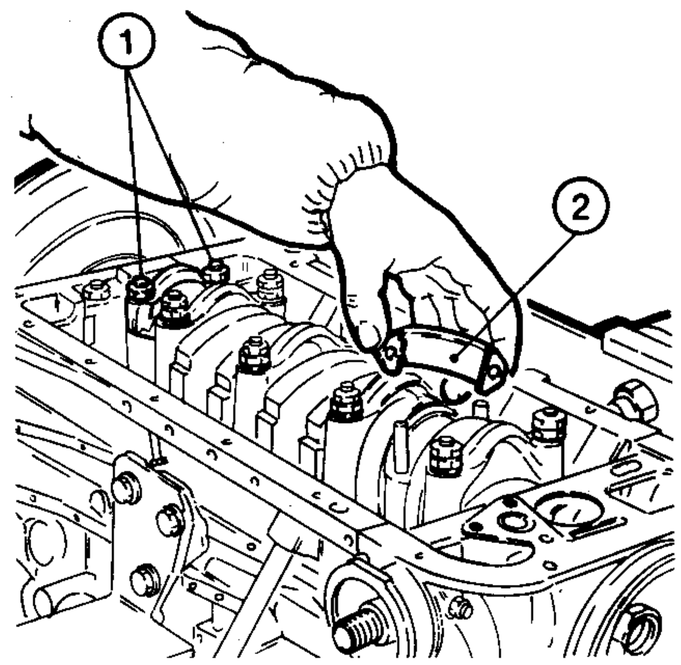

1. Nuts
2. Connecting rod caps

h. Remove cylinder liner retainers **A.2.0117** and withdraw liners (1) and pistons with connecting rods (2) and associated bearing shells.

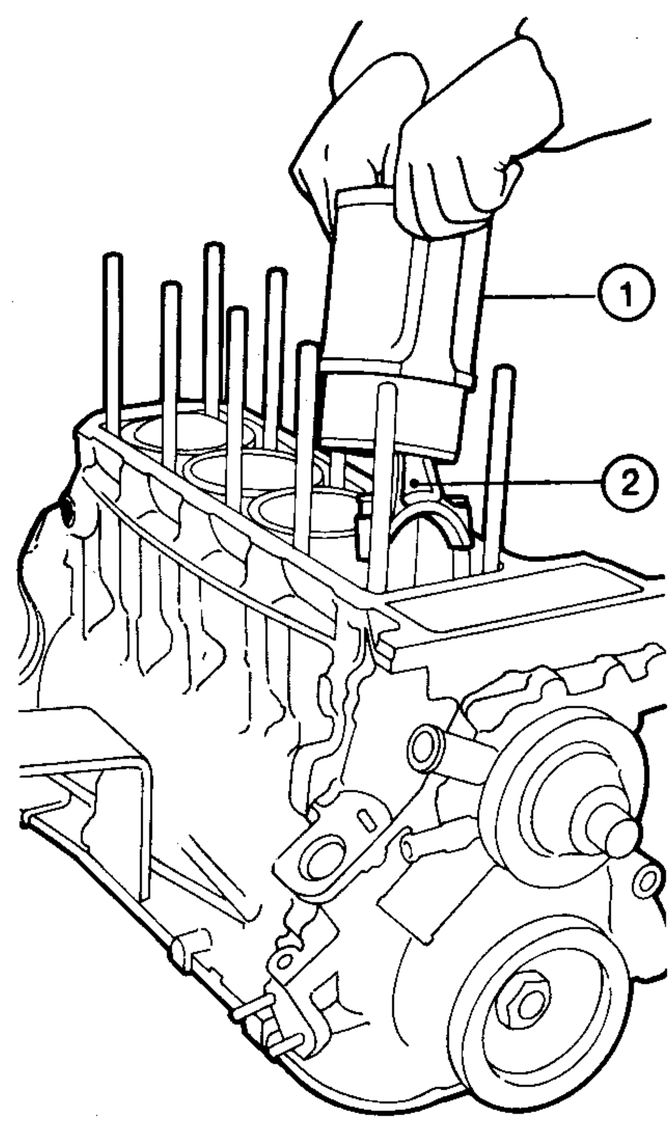

1. Cylinder liners
2. Pistons and connecting rods

i. Block flywheel (1) with tool **A.2.0145**.

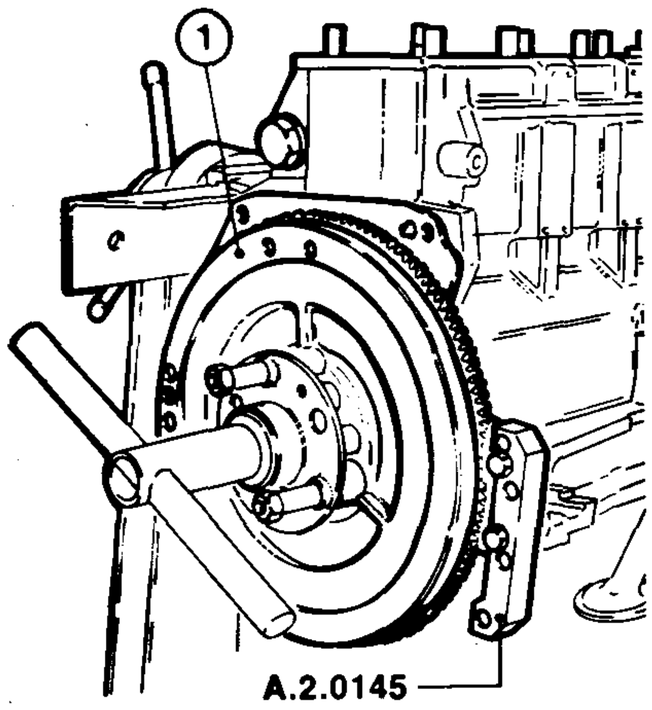

1. Flywheel

j. Bend back lockwasher tab using a punch and a hammer.
Back off nut retaining crankshaft pulley (1) using a suitable tool.
Remove pulley.

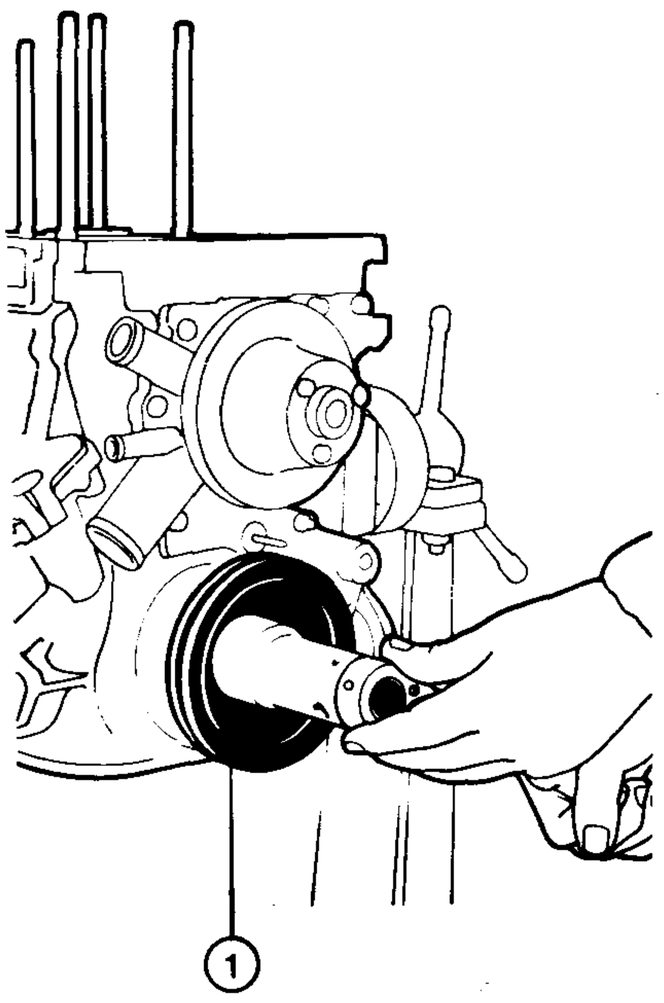

1. Crankshaft pulley

k. Slacken screws (1) retaining flywheel (2) to crankshaft.
Remove screws (1), lockwasher (3), flywheel (2), spacer and tool **A.2.0145**.

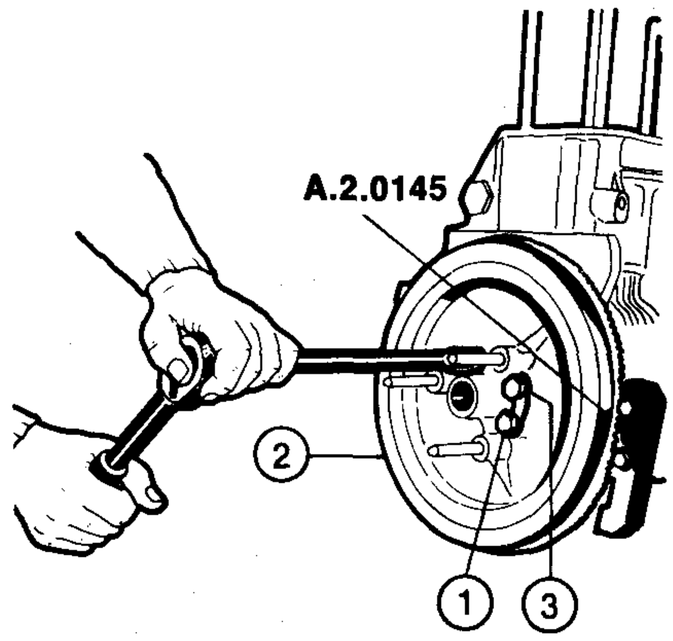

1. Screw
2. Flywheel
3. Lockwasher

l. **Front cover**
— Remove nuts with washers retaining front cover (1) to engine block.
— Remove front cover (1) with gaskets (2).
— Remove and scrap seal (3).

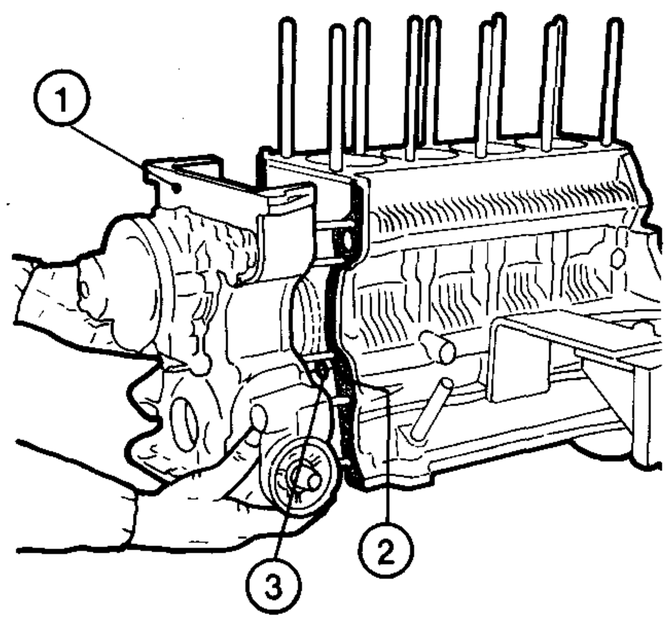

1. Cover
2. Gasket
3. Seal

m. Remove oil ring (1), oil pump drive gear (2), idler gear (3) with associated thrust washer, and chain (4) from crankshaft.

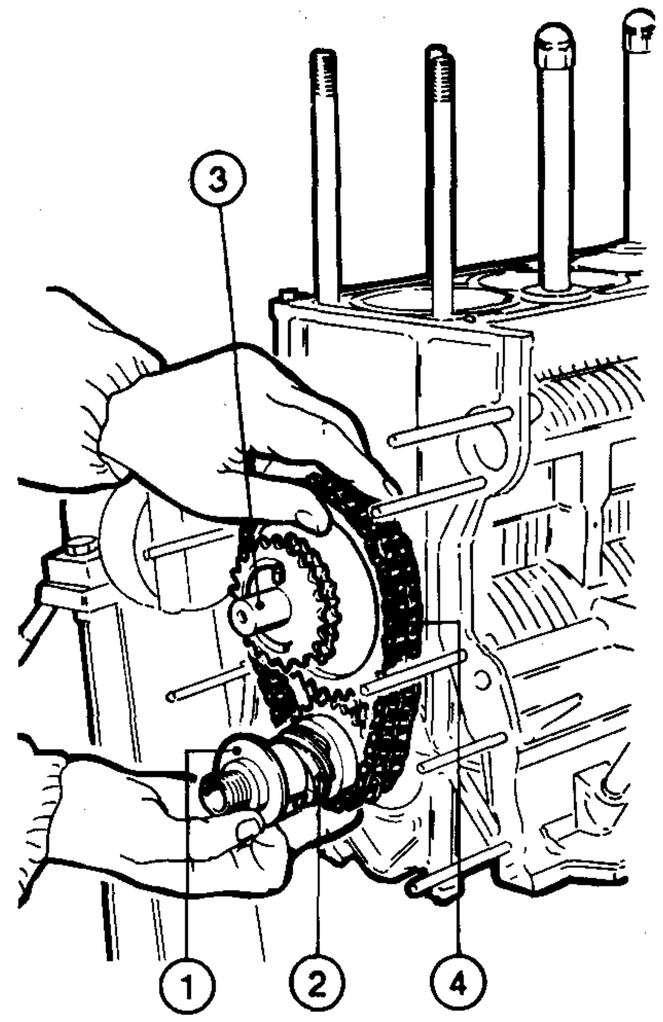

1. Oil ring
2. Oil pump drive gear
3. Idler gear
4. Chain

n. Remove nuts and washers retaining rear cover.
Remove rear cover (1) and gasket (2).

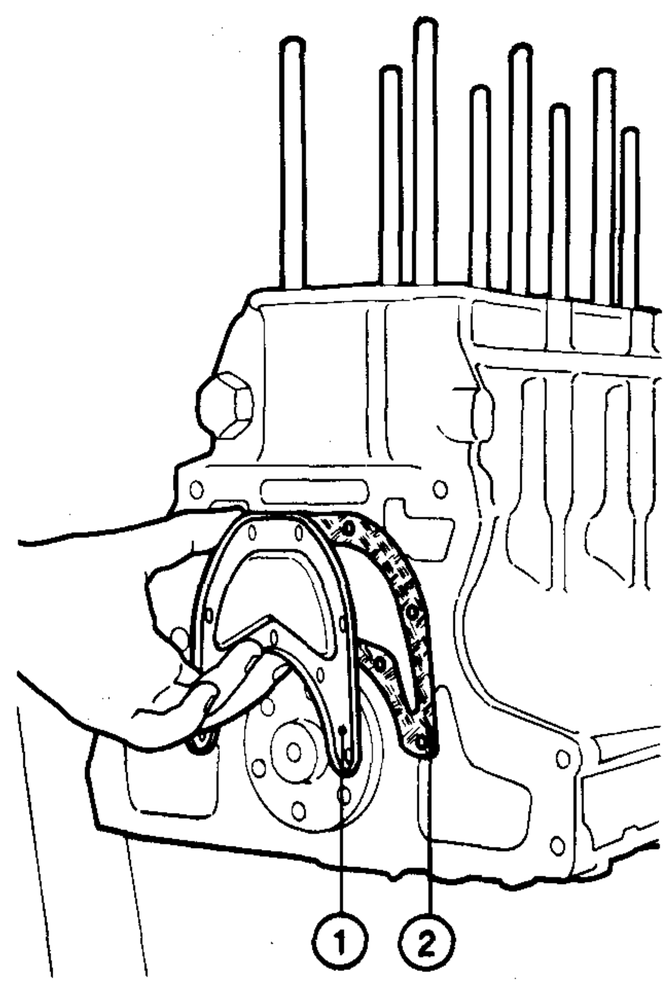

1. Cover
2. Gasket

MAIN BEARING CAP AND CRANKSHAFT REMOVAL

a. Bend back lockwasher tabs on nuts (1) retaining rear main bearing cap (2) as shown below.
Remove nuts (1) and lockwashers.

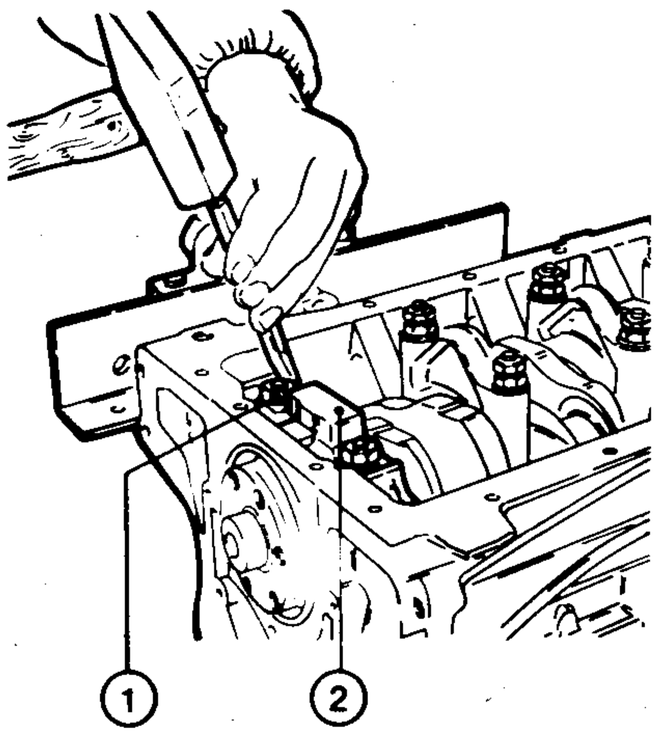

1. Nuts
2. Rear main bearing cap

b. Remove locknuts, nuts and washers (1) retaining the four main bearing caps (2).

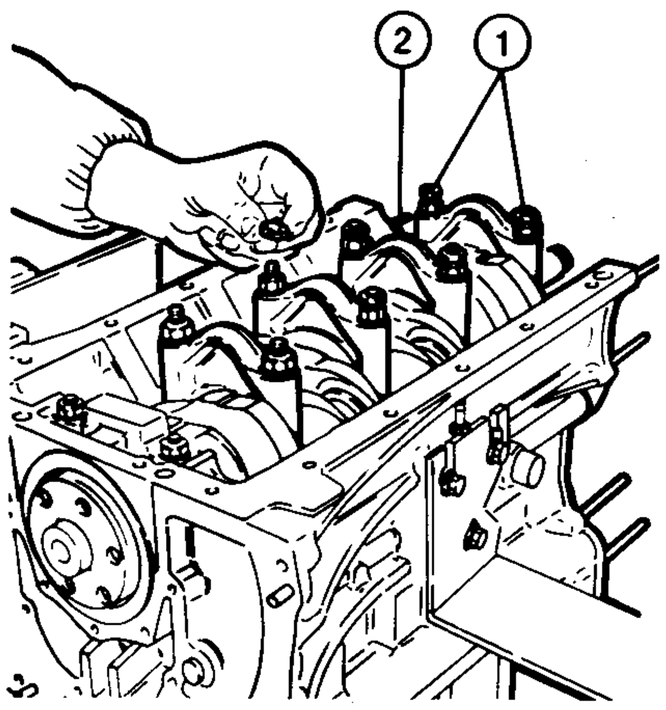

1. Locknuts, nuts and washers
2. Main bearing caps

c. Remove rear main bearing cap (1) using lever **A.3.0139/0001** and puller **A.3.0139/0002**.
Retrieve seals (2) and rear oil seals (3).

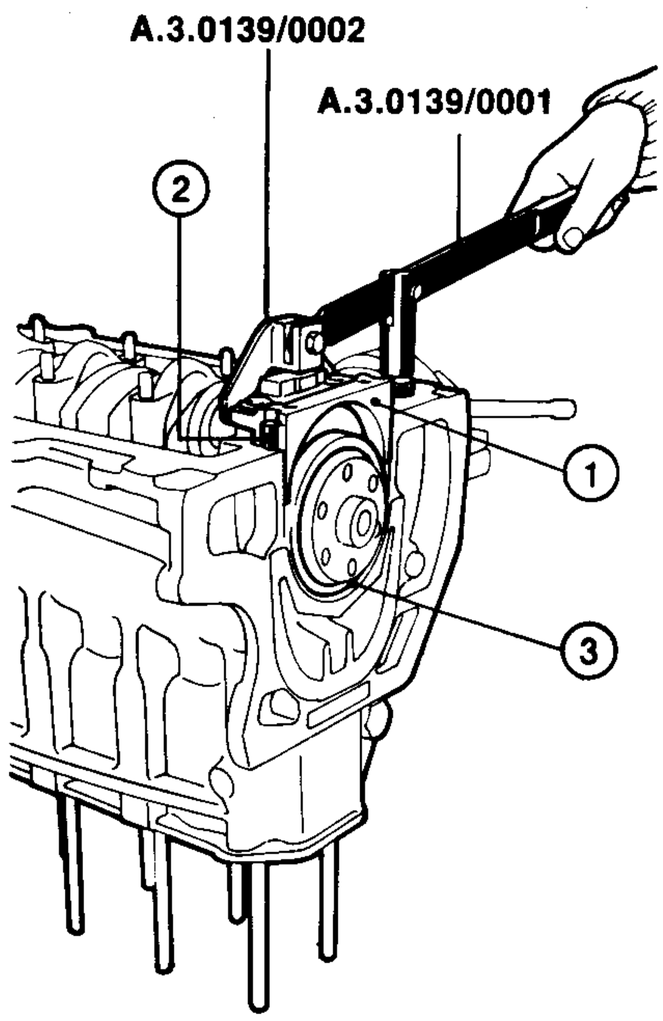

1. Rear main bearing cap
2. Seals
3. Oil seal

d. Remove remaining main bearing caps (1) using a suitable puller.

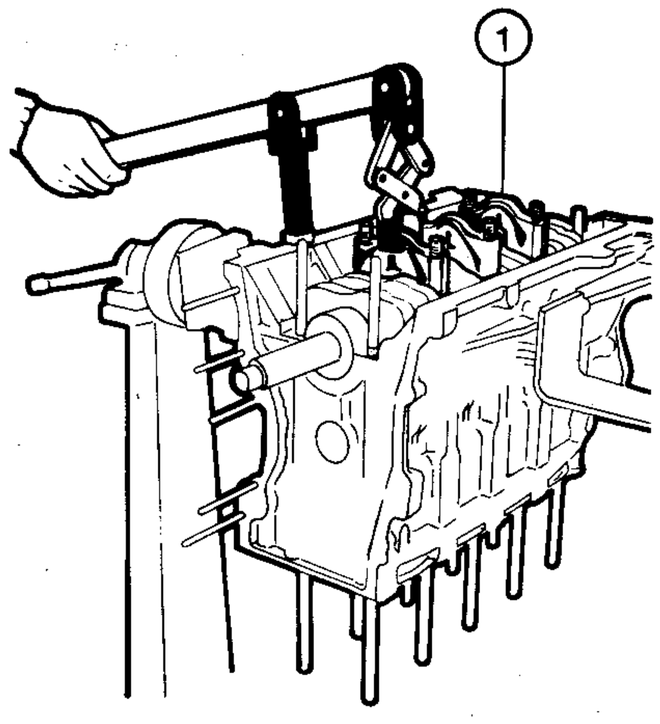

1. Main bearing caps

e. Remove thrust washer halves, turning crankshaft as necessary to facilitate removal.
Removal crankshaft (1) and top main bearing halves (2).
If bearing condition is such that they can be reused, mark positions to ensure correct placement on reassembly.

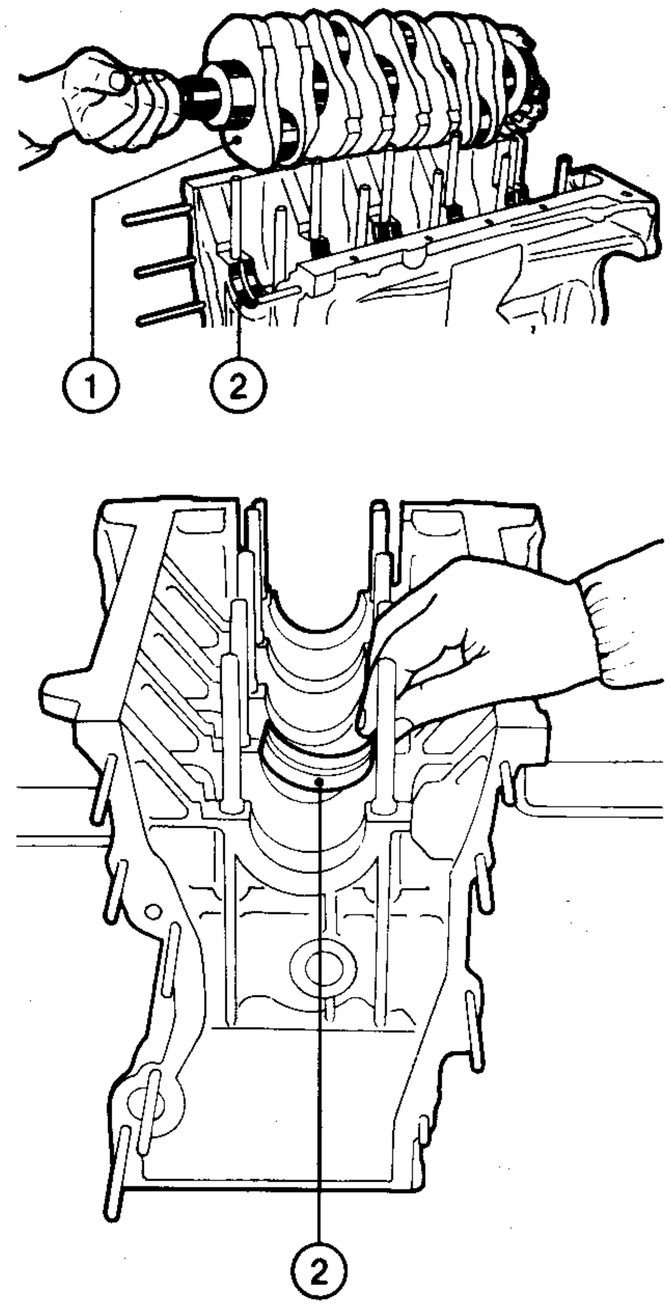

1. Crankshaft
2. Top main bearing halves

WATER PUMP REMOVAL

a. Remove nuts with washers retaining water pump (1) to front cover.
b. Remove water pump (1).

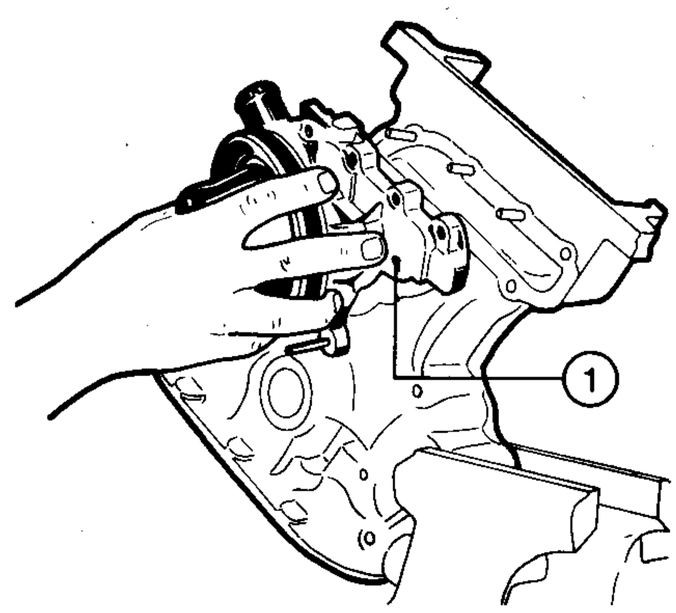

1. Water pump

c. For water pump disassembly see Group 07: Engine Cooling.

INTAKE MANIFOLD/COLLECTOR BOX DISASSEMBLY

a. Slacken screw on clip (2) retaining oil vapour recirculation line (1) to intake air collector box.
Remove line (1).
b. Back off nuts with washers (3) and remove collector box (4) together with gasket.

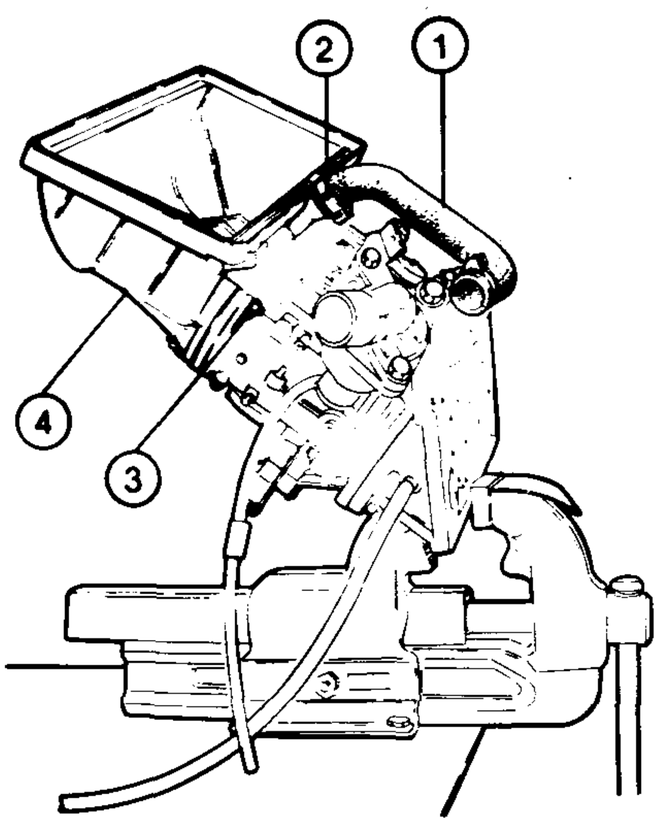

1. Vapour recirculation line
2. Clip
3. Nuts and washers
4. Intake air collector box

c. Back off fittings (1) retaining fuel supply line (2) to carburetter bowls.
d. Remove return spring (3) from throttle link (4) and release link.
e. Back off nuts with washers (5) retaining carburetters to cushion pads, move ground cable and remove carburetters.

NOTE:
For carburetter service, see Group 04: Engine Fuel System.

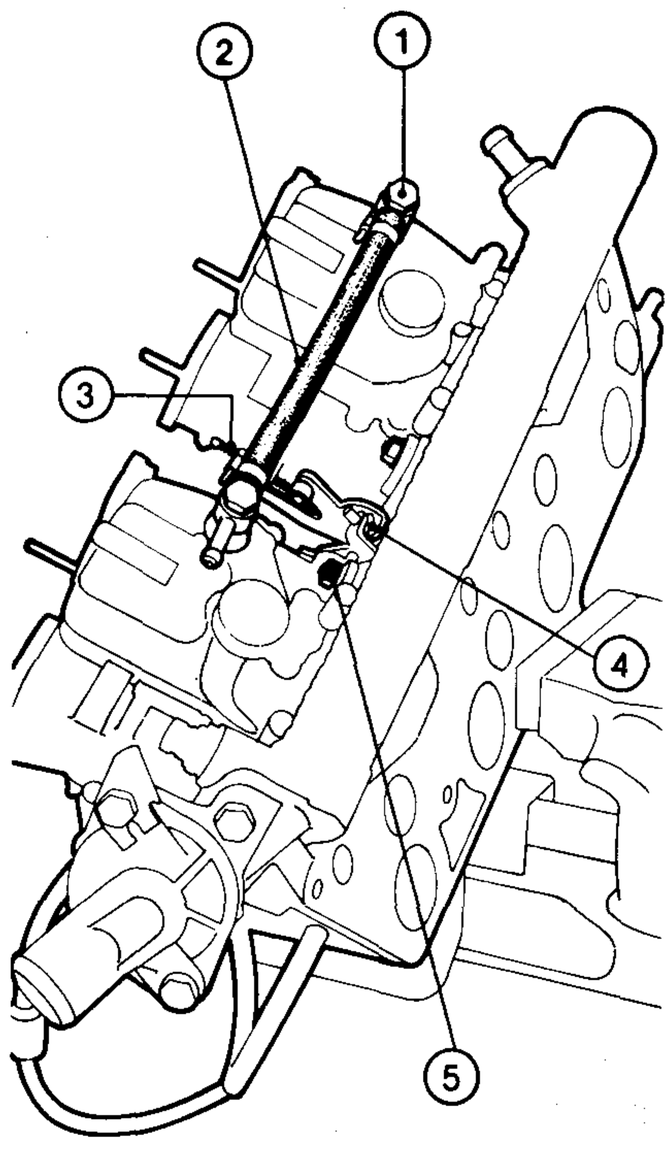

1. Fittings
2. Fuel supply line
3. Spring
4. Link
5. Nuts and washers

f. Back off nuts and washers and remove cushion pads (1) from manifold.
Retrieve ground cable (2).
g. Back off coolant temperature sending unit (3).
h. Back off screws with washers (4) and remove cover (5) together with thermostat from seat on intake manifold.
Retrieve spark plug cable bracket (6).
i. Remove vacuum servo check valve (7) from manifold.

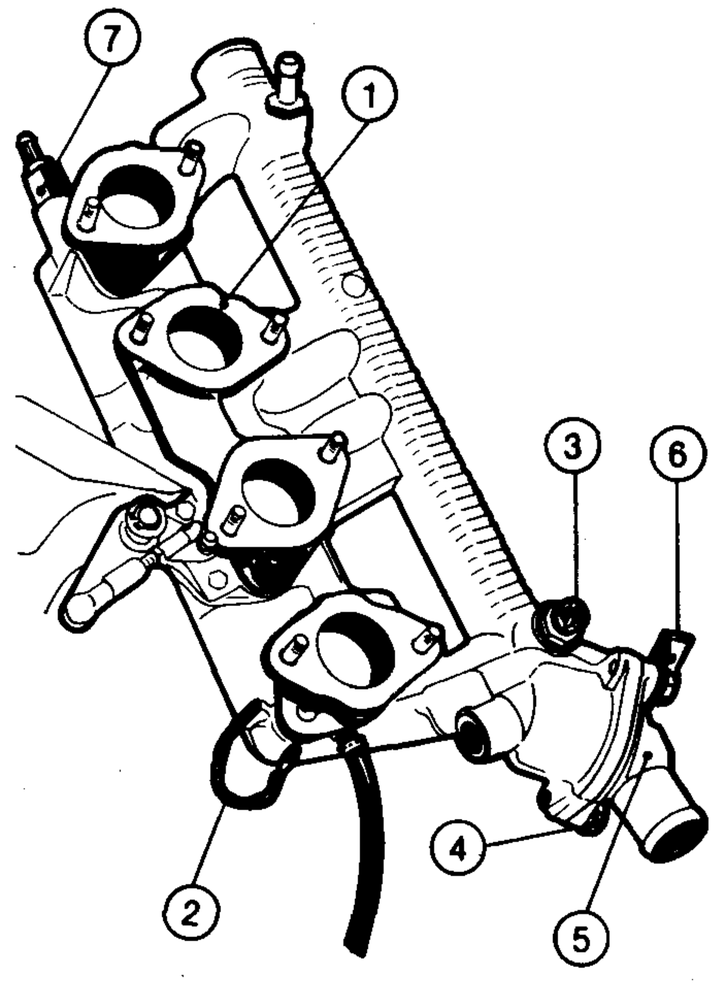

1. Cushion pads
2. Ground cable
3. Sending unit
4. Screws and washers
5. Cover with thermostat
6. Cable bracket
7. Check valve

NOTE:
For thermostat disassembly and inspection, see Group 07: Engine Cooling System.

CYLINDER HEAD DISASSEMBLY

a. Clamp adjustable support **A.2.0195** in vice. Install fork **A.2.0196** and secure to support. Fit cylinder head (1) over fork studs and secure using head nuts.

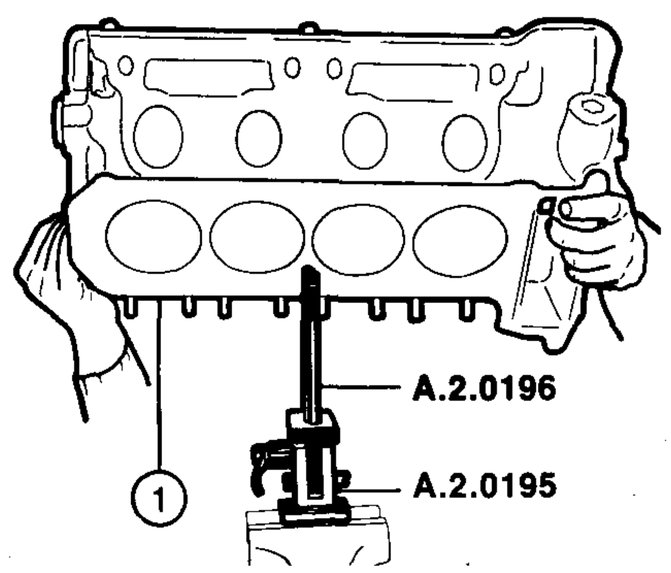

1. Cylinder head

b. Back off nuts with washers (1) retaining camshaft caps (2). Remove caps

(2) and camshafts (3). Arrange parts in order to ensure correct placement upon reassembly.

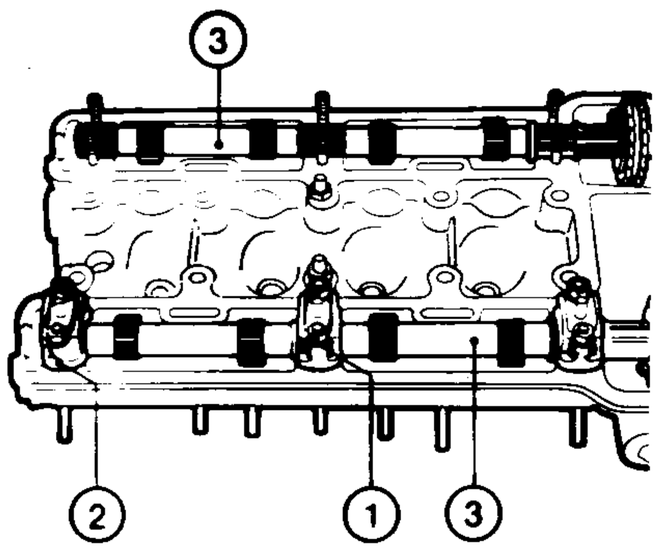

1. Nuts and washers
2. Caps
3. Camshafts

c. **Remove tappets (1) and valve tip cups (2)**, noting positions to ensure correct placement upon reassembly.

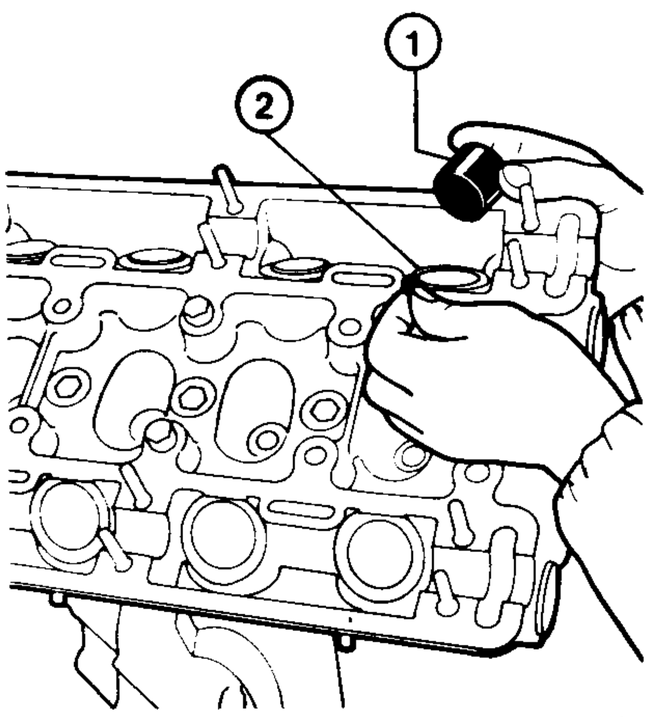

1. Tappets
2. Valve tip cups

d. Insert **valve support A.2.0192** from underside of spark plug housing and secure with wing nut (3).

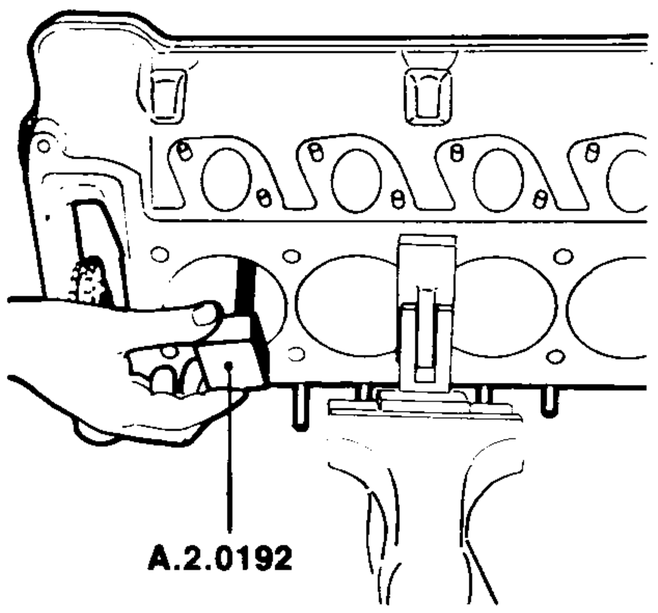

e. **Valve removal equipment installation**

— Screw lever support **A.3.0103/0010** on to center cylinder head studs (1).

— Position lever **A.3.0324** for valve retainer lock removal.

— Install valve spring compressor **A.3.0103/0006** on lever. Position spring compressor on spring cap hook end of lever on support.

— Pull down lever **A.3.0324** to compress springs and remove retainer locks from valve stems using a suitable tool (2).

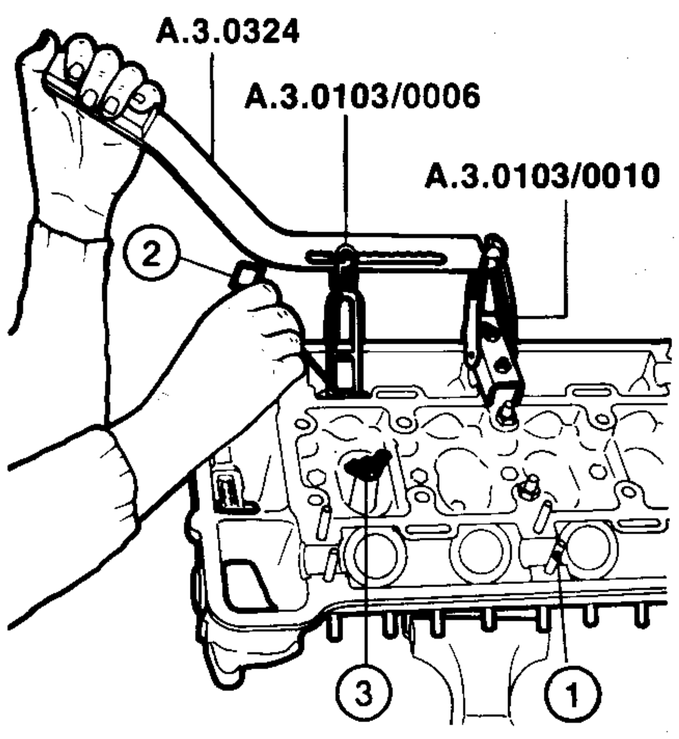

1. Center studs
2. Retainer lock removal tool
3. Wing nut for tool A.2.0192

— Remove top spring cup (1), outer spring (2) and inner spring (3) in that order.

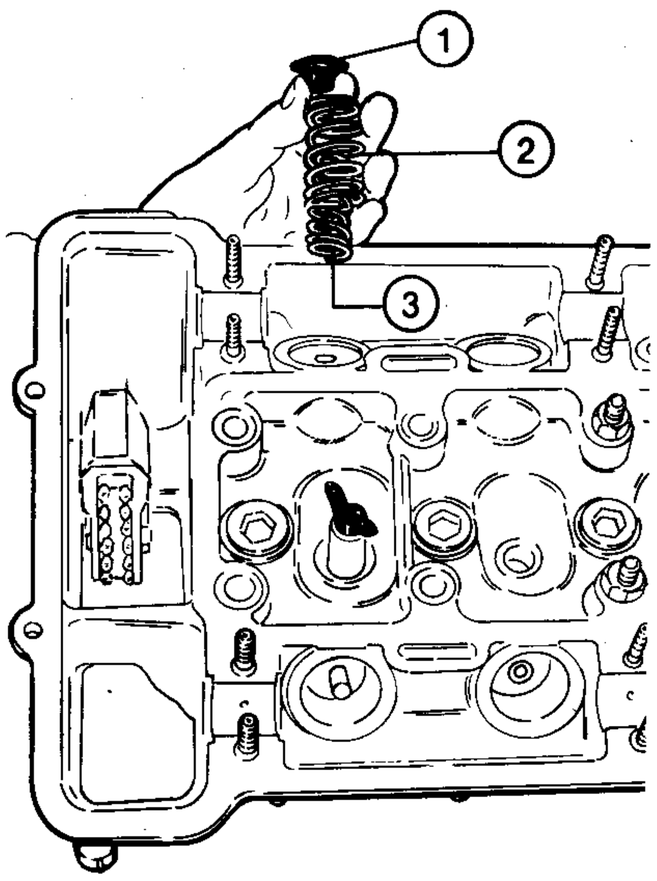

1. Top spring cup
2. Outer spring
3. Inner spring

— Repeat removal procedure for each valve. Subsequently, remove tools **A.3.0324**, **A.3.0103/0006** and **A.3.0103/0010**.

— Using tool **A.3.0247**, remove oil seal (1) from intake valve guides. Remove bottom spring cups (2) together with spring abutment washers.

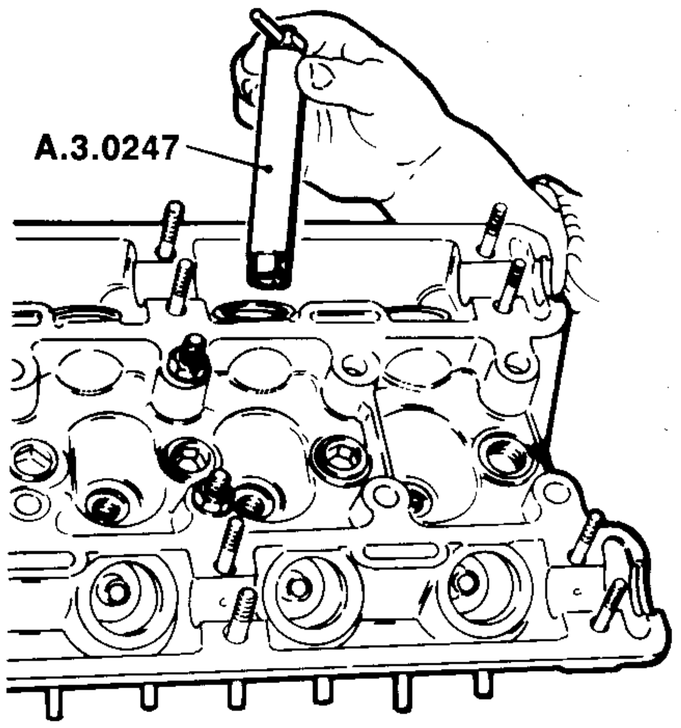

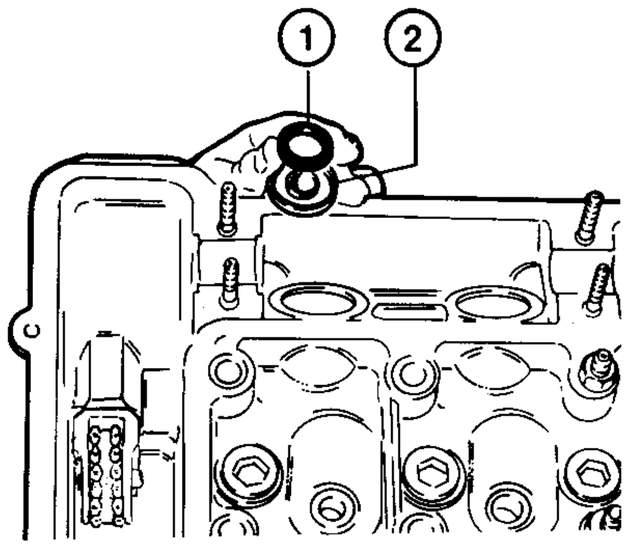

1. Oil seal
2. Bottom spring cup

f. **Chain tensioner removal**

— Overturn cylinder head on support clamped in vice.

— Hold chain tensioner (1) in its seat and slacken retaining screw (2).

— Unload spring (3) and withdraw tensioner.

— Remove screw (2) and retrieve spring retainer plate (4).

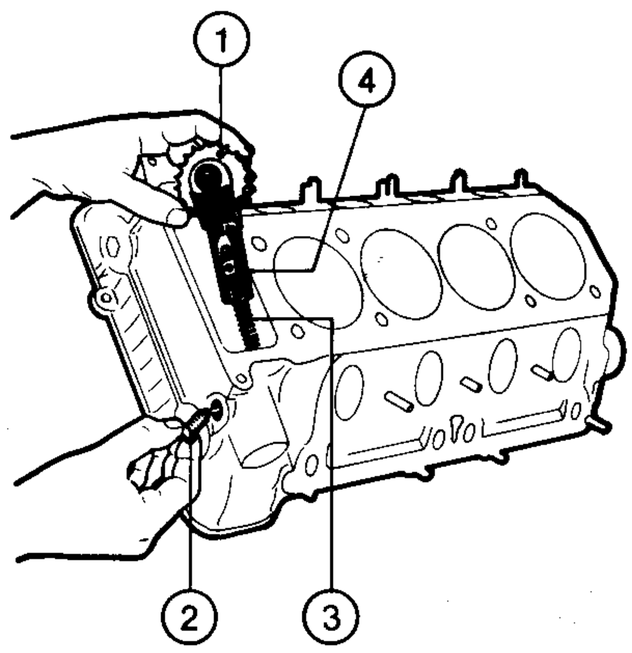

1. Chain tensioner
2. Screw
3. Spring
4. Plate

g. **Remove the following parts from camshafts (5):**
- Bolt (1).
- **Nut** (2), lockwasher (3) and washer (4) on drive gear.
- Gear (6), flange (7) and woodruff key (8).

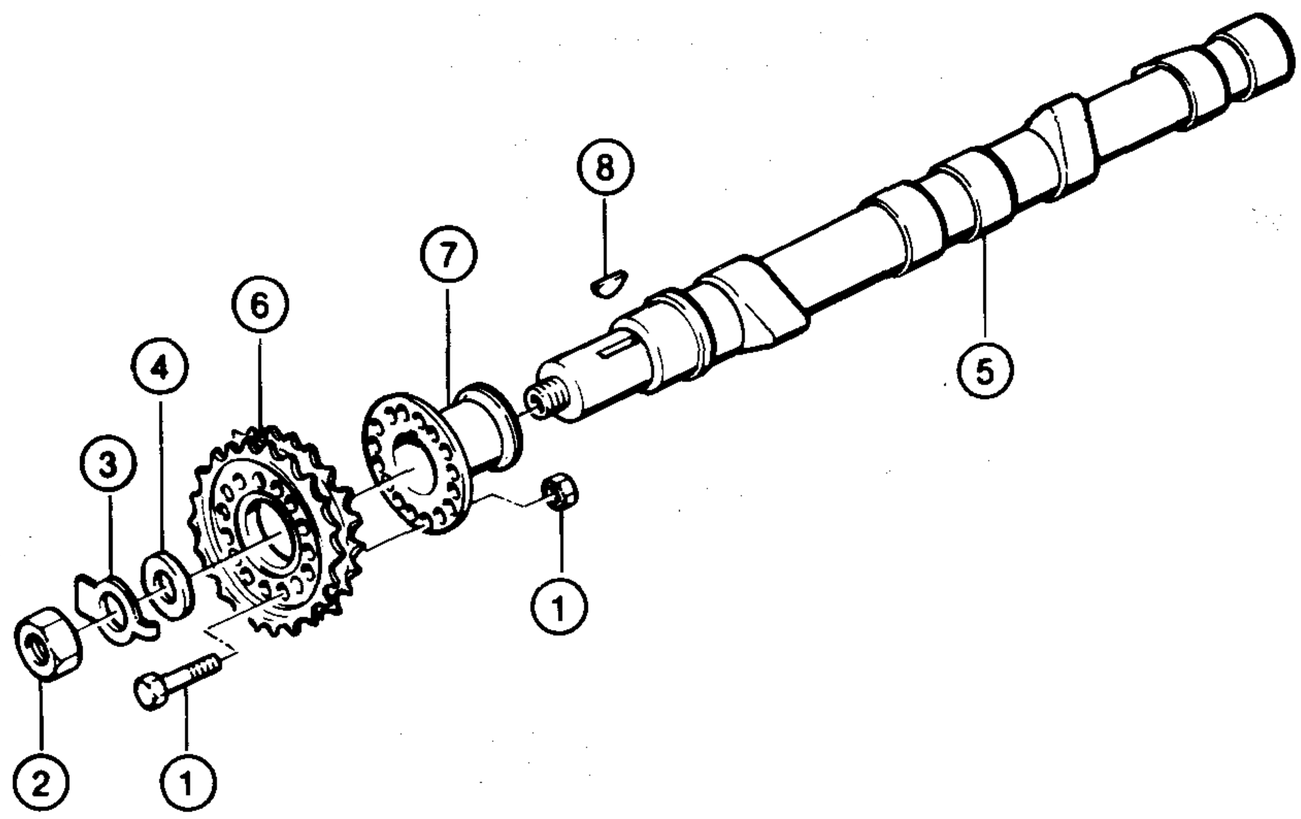

1. Bolt
2. Nut
3. Lockwacher
4. Washer
5. Camshaft
6. Drive gear
7. Flange
8. Woodruff key

CHECKS AND INSPECTION

CYLINDER HEADS AND VALVES

CYLINDER HEAD SEALING SURFACE INSPECTION

a. Thoroughly clean head surfaces **using** butyl acetate or methylethylketone to remove any gasket fragments.

b. Visually inspect head for cracks or other defects.

c. Check head sealing surface for warpage using a straightedge and feeler gauge positioned as shown.

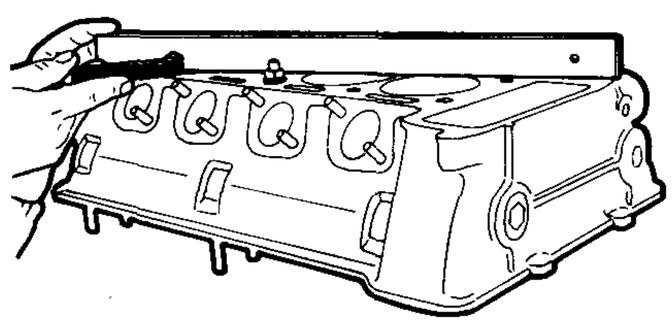

Maximum flatness error of cylinder head sealing surface: 0.05 mm (0.002 in)

d. In the event of excessive warpage, head must be refaced. Before refacing, remove the four exhaust manifold studs (1).

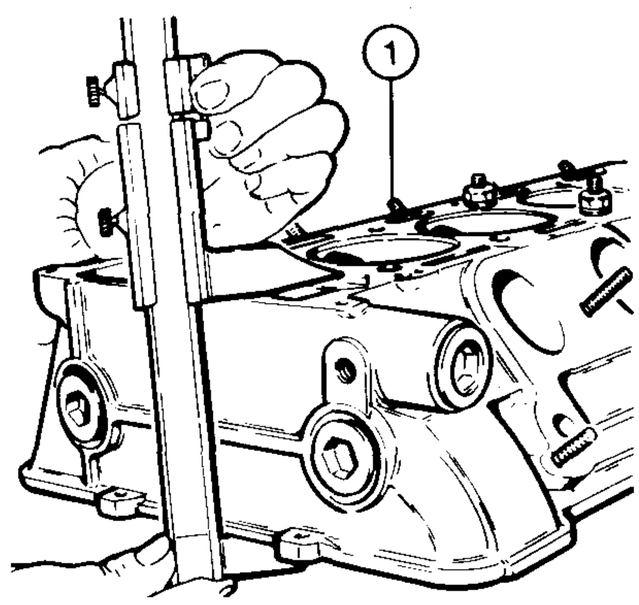

1. Studs

Minimum cylinder head height after refacing: 111.5 mm (4.390 in)

Do not machine head below the minimum allowable thickness, otherwise severe engine damage might result.

e. Check finish of machined surface.

Maximum allowable surface roughness:
1.6 μm (63 microinch)

Head top and bottom faces must be parallel to within:
0.087 mm (0.0034 in)

TAPPETS AND TAPPET HOUSING BORES

a. Check tappet housing bores using a bore gauge (1) and a dial indicator (2). Compare readings with dimensions and tolerances given in Inspection Specifications Tables.

b. Check tappet skirt and head for signs of scuffing, score marks or excessive wear. Check diameter of tappet (3) using an outside micrometer, referring to Inspection Specifications Tables for dimensions and tolerances.

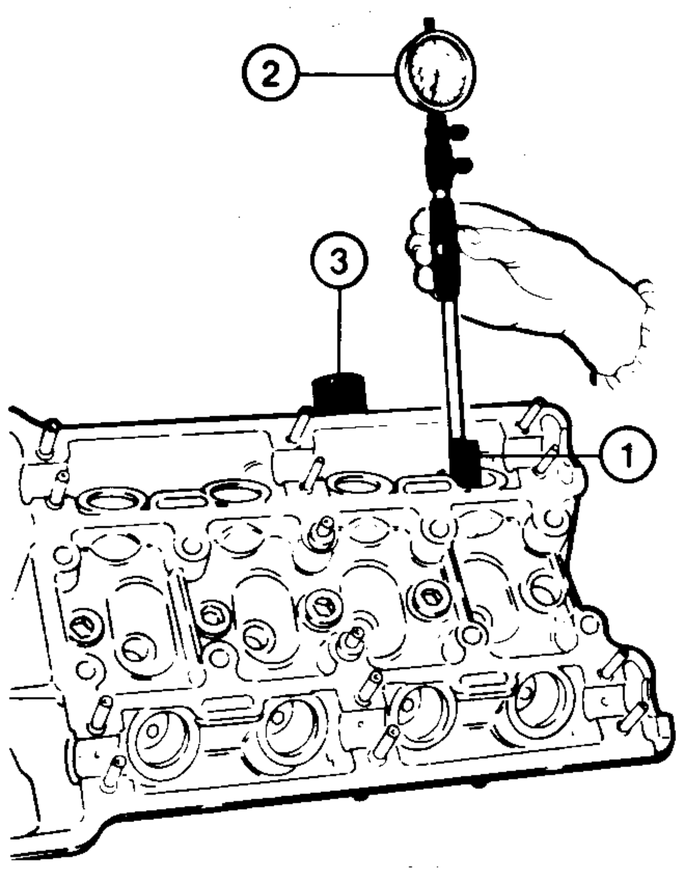

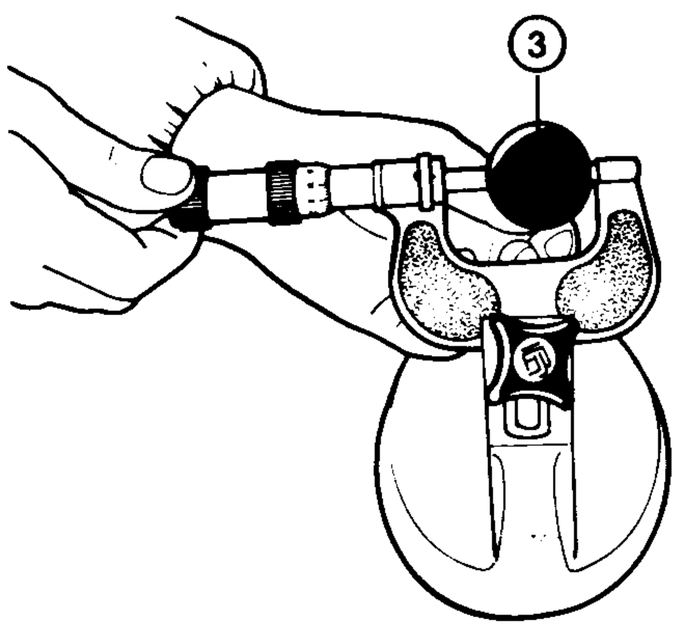

1. Bore gauge
2. Dial indicator
3. Tappet

CAMSHAFTS AND CAMSHAFT JOURNAL HOUSING BORES

a. Install caps (1), lubricate nuts, and tighten to the specified torque.

b. Using a bore gauge (2) with dial indicator (3), measure camshaft journal housing bore diameter.

(T) : Tightening torque
Camshaft cap nuts
20 to 22 Nm
(2 to 2.25 kgm
14.7 to 16.2 ft.lb)

Camshaft journal housing bore diameter:
27.000 to 27.033 mm
(1.0630 to 1.0643 in)

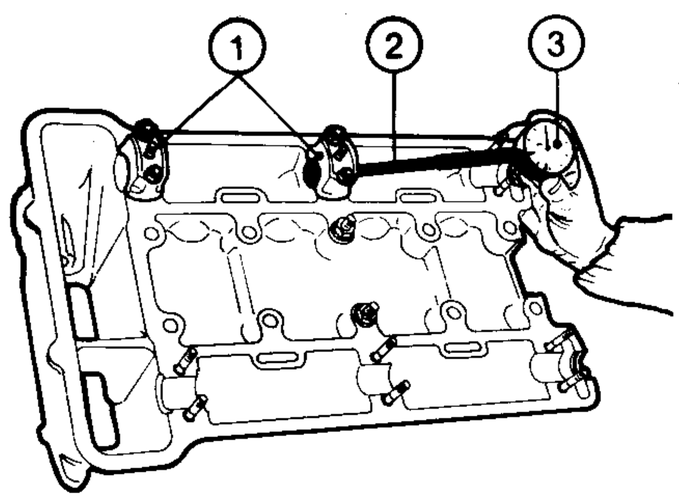

1. Caps
2. Bore gauge
3. Dial gauge

c. Check cam lobes and camshaft journals for score marks, scuffing, signs of overheating or excessive wear.

d. Measure camshaft journal diameter using an outside micrometer. Check for out-of-round condition using a dial gauge.

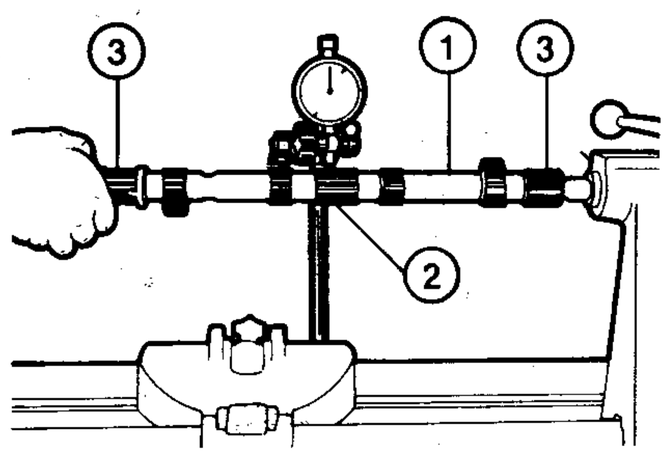

1. Camshaft
2. Center journal
3. End journals

Camshaft journal diameter:
26.959 to 26.980 mm
(1.0614 to 1.0622 in)

e. Check height of cam lobes using a dial indicator. Scrap and replace camshaft if height falls below requirements.

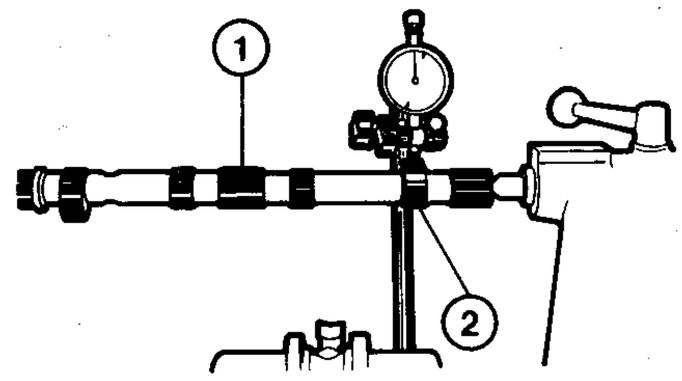

1. Camshaft
2. Cam

Minimum cam lobes height mm (in)				
	Engine			
Cam	016.00	016.78 016.55	017.13 061.00 062.02 062.12	061.34
i.	9 (0.35)	9.5 (0.37)	11 (0.43)	8 (0.31)
e.	9 (0.35)	9.5 (0.37)	9 (0.35)	9 (0.35)

i. = intake valve cam
e. = exhaust valve cam

VALVE SEAT INSERT REPLACEMENT

a. Check seat inserts for nicks, cracks or burn marks, and ensure that they are firm in housing bores. Replace if necessary.

b. To remove seat inserts, use a suitable tool as shown below.

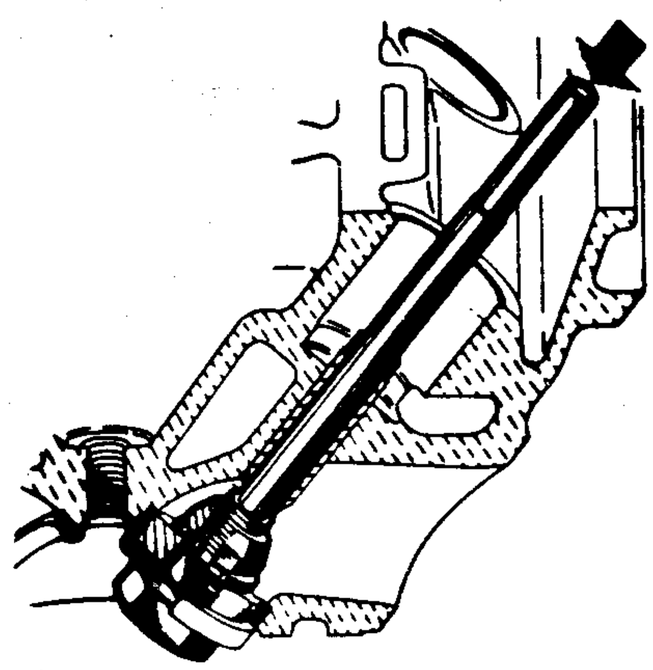

c. Prior to installing new seat inserts, check insert and housing bore dimensions against specifications shown in table.

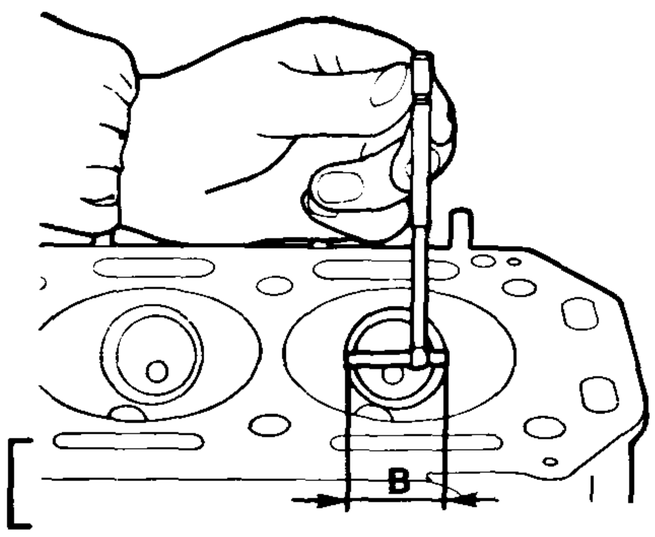

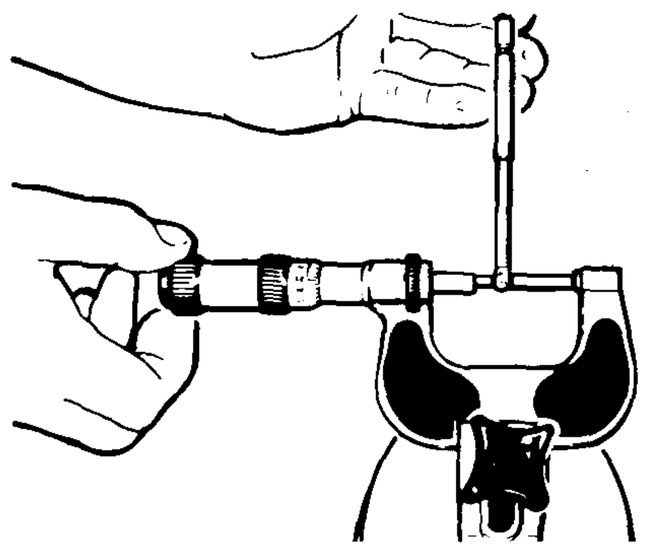

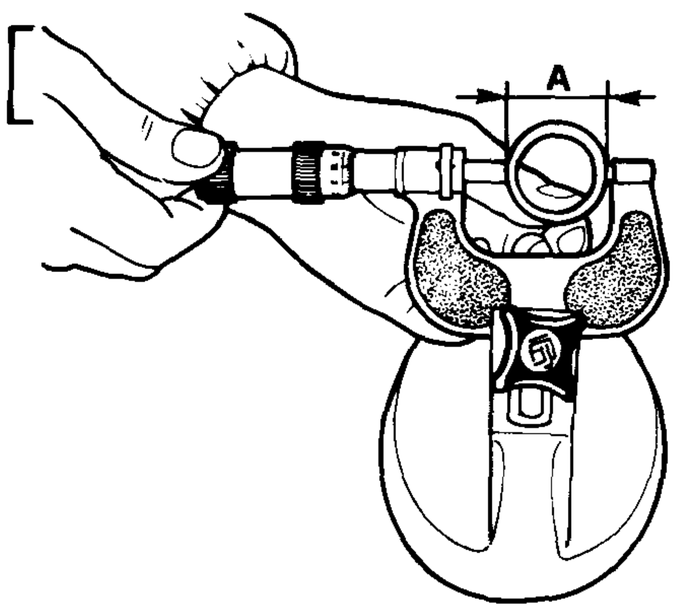

Valve	Engine 016.00 - 016.78 061.00 - 062.02
Seat insert O.D. [A = mm (in)]	
Standard	i. 42.597 to 42.632 (1.6770 to 1.6784) e. 38.597 to 38.632 (1.5196 to 1.5209)
Oversize	i. 42.897 to 42.932 (1.6889 to 1.6902) e. 38.897 to 38.932 (1.5314 to 1.5328)

Valve	Engine 016.55 - 017.13 062.12 - 061.34
Seat insert O.D. [A = mm (in)]	
Standard	i. 45.065 to 45.100 (1.7742 to 1.7756) i. 42.597 to 42.632 (1.6770 to 1.6784)(1) e. 41.065 to 41.100 (1.6167 to 1.6181) e. 38.642 to 38.658 (1.5213 to 1.5220)(1)
Oversize	i. 45.365 to 45.400 (1.7860 to 1.7874) i. 42.897 to 42.932 (1.6888 to 1.6902)(1) e. 41.365 to 41.400 (1.6285 to 1.6299) e. 38.492 to 38.958 (1.5154 to 1.5338)(1)
i. = Intake valve	e. = Exhaust valve

(1) For 061.34 engine only

Valve	Engine 016.00 - 016.78 061.00 - 062.02
Insert housing bore O.D. [B = mm (in)]	
Standard	i. 42.532 to 42.557 (1.6745 to 1.6755) e. 38.532 to 38.557 (1.5170 to 1.5180)
Oversize	i. 42.832 to 42.857 (1.6863 to 1.6873) e. 38.832 to 38.857 (1.5288 to 1.5298)

Valve	Engine 016.55 - 017.13 062.12
Insert housing bore O.D. [B = mm (in)]	
Standard	i. 45.000 to 45.025 (1.7717 to 1.7726) e. 41.000 to 41.025 (1.6142 to 1.6152)
Oversize	i. 45.300 to 45.325 (1.7835 to 1.7844) e. 41.300 to 41.325 (1.6260 to 1.6270)
i. = Intake valve	e. = Exhaust valve

d. Heat cylinder head in oven to 100°C (212°F).

e. Install valve seat inserts using a suitable driver as shown.

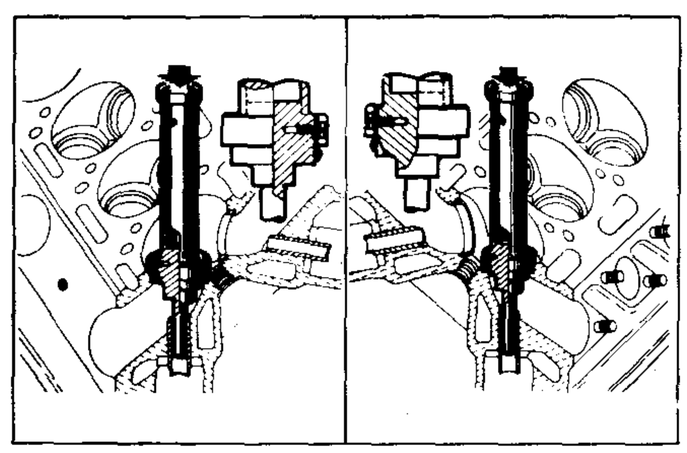

VALVE GUIDES

Check valve stem clearance in guide, if clearance exceeds tolerance scrap and replace worn parts.

Clearance measurement

a. Using an outside micrometer, measure valve stem at three different points, each offset by 90 degrees.

b. Measure guide I.D. using a bore gauge (1).

Valve guide I.D.:
9.000 to 9.015 mm
(0.3543 to 0.3549 in)

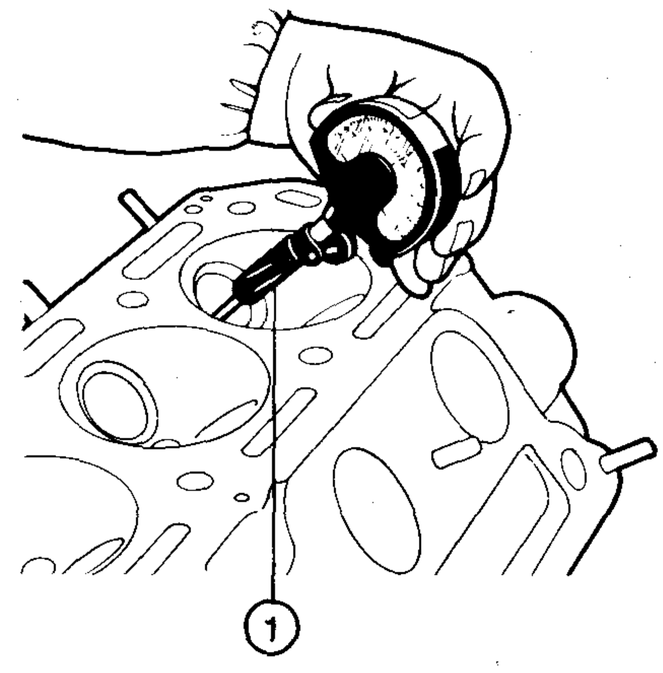

1. Bore gauge

c. Calculate clearance by subtracting maximum stem diameter from guide I.D.

Valve stem/guide clearance:

Intake:	**0.013 to 0.043 mm**
	(0.0005 to 0.0017 in)
Exhaust:	**0.040 to 0.080 mm**
	(0.0016 to 0.0031 in)
Exhaust:	**0.040 to 0.075 mm** (1)
	(0.0016 to 0.0030 in) (1)
Exhaust:	**0.040 to 0.070 mm** (2)
	(0.0016 to 0.0028 in) (2)

(1) For 061.34 engine only
(2) For Eaton-Livia valve, 061.34 engine

Valve guide replacement

a. Check valve guides for score marks, scuffing, distortion or signs of movement in seats.

b. If replacement is necessary, remove worn guides using driver **A.3.0134** as shown.

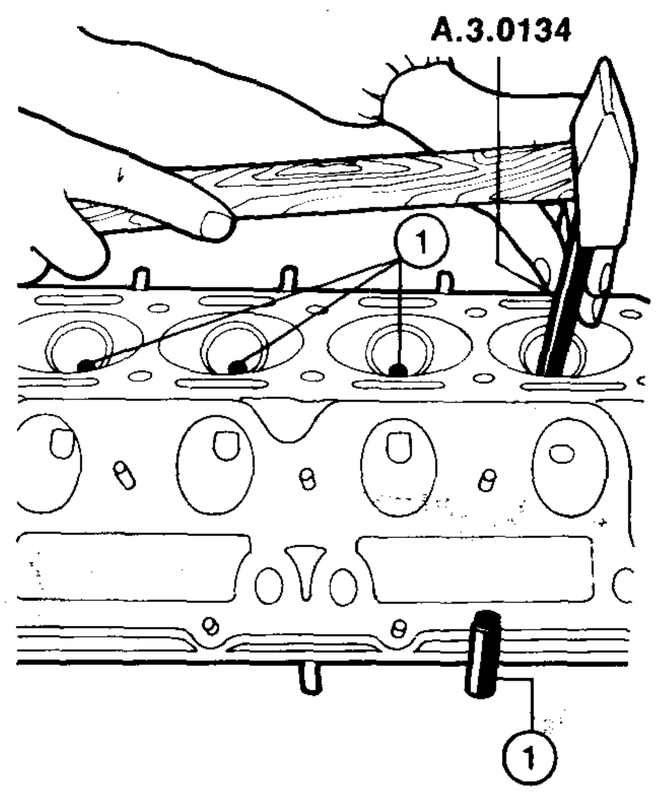

1. Valve guides

c. Check guide seat diameter and O.D. of new guides; interference fit must be within specified tolerances.

Valve guide seat diameter:
13.990 to 14.018 mm
(0.5508 to 0.5519 in)

Valve guide O.D.:
14.033 to 14.044 mm
(0.5525 to 0.5529 in)
(intake and exhaust)

14.048 to 14.059 mm
(0.5531 to 0.5535 in)
(exhaust) (1)

Valve guide/seat interference fit:
0.015 to 0.054 mm
(0.0006 to 0.0021 in)
(intake and exhaust)

0.030 to 0.069 mm
(0.0012 to 0.0027 in)
(exhaust) (1)

(1) For 061.34 engine only

d. Install new guides using tool **A.3.0246** for intake valve guides and a suitable tool for exhaust valve guides. These tools ensure that the correct guide stand-out from the bottom spring cup abutment surface on cylinder head is maintained.

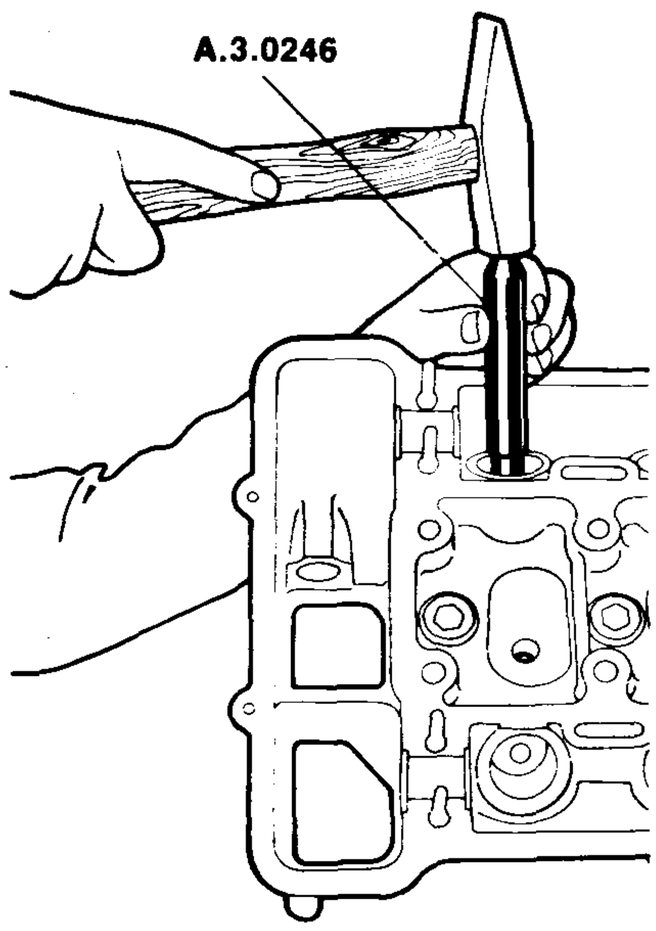

Valve guide stand-out mm (in)	
Valve	**Engines 016.00 - 016.78 - 016.55 - 061.34**
Intake	13.300 to 13.500 (0.5236 to 0.5315)
Exhaust	16.300 to 16.500 (0.6417 to 0.6496)
Valve	**Engine 017.13**
Intake	11.800 to 12.000 (0.4646 to 0.4724)
Exhaust	16.300 to 16.500 (0.6417 to 0.6496)

Valve guide stand-out mm (in)	
Valve	**Engine 061.00**
Intake	11.800 to 12.000 (0.4646 to 0.4724)
Exhaust	16.300 to 16.500 (0.6417 to 0.6496)
Valve	**Engines 062.02 - 062.12**
Intake	13.800 to 13.500 (0.5236 to 0.5315)
Exhaust	16.300 to 16.500 (0.6417 to 0.6496)

e. Ream valve guides to the specified diameter. Check I.D. after reaming.

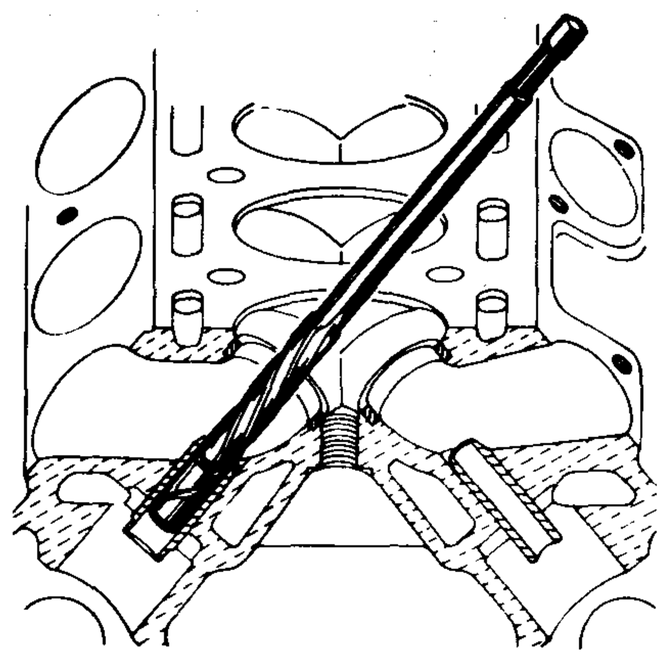

Valve guide fitted I.D. after reaming:
9.000 to 9.015 mm
(0.3543 to 0.3549 in)

VALVES AND VALVE SEATS

Check valves for nicks, burns or excessive deposits due to poor sealing between valve face and seat. If necessary, scrap and replace valves.

a. If valves are in good condition, check dimensions against specifications.

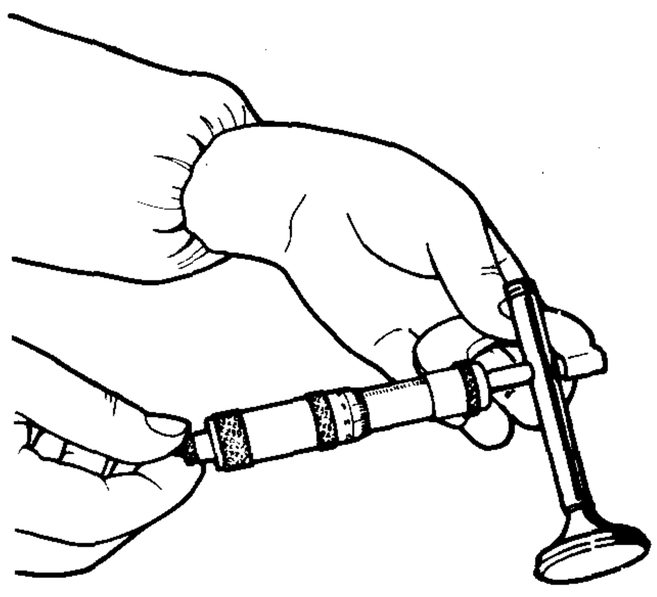

Valve stem diameter:

Intake: 8.972 to 8.987 mm
(0.3532 to 0.3538 in)
Exhaust: 8.935 to 8.960 mm
(0.3518 to 0.3528 in)
Exhaust: 8.940 to 8.960 mm (1)
(0.3520 to 0.3528 in) (1)
Exhaust: 8.945 to 8.960 mm (2)
(0.3522 to 0.3528 in) (2)

(1) ATE valve stem diameter for 062.12 and 061.34 engine
(2) Eaton-Livia valve stem diameter for 061.34 engine

Valve head diameter mm (in)	
Type	**Engines 016.00 - 016.78 - 061.00 062.02 - 061.34**
Ate	
i.	41.000 to 41.200 (1.6142 to 1.6220)
e.	37.000 to 37.200 (1.4567 to 1.4646)
Eaton Livia	
i.	41.000 to 41.150 (1)(2) (1.6142 to 1.6201) (1)(2)
e.	37.000 to 37.150 (1.4567 to 1.4626)
Type	**Engines 017.13 - 016.55 - 062.12**
Ate	
i.	44.010 to 44.150 (1.7327 to 1.7382)
e.	40.010 to 40.150 (1.5752 to 1.5807)
Eaton Livia	
i.	44.000 to 44.150 (1.7323 to 1.7382)
e.	40.000 to 40.150 (1.5748 to 1.5807)

i. = intake valve e. = exhaust valve

(1) For 062.02 and 061.00 engines: 41.850 to 42.000 (1.6476 to 1.6535)
(2) For 061.34 engine: 41.800 to 42.000 (1.6457 to 1.6535)

b. Grind valve seats using suitable equipment as shown below.

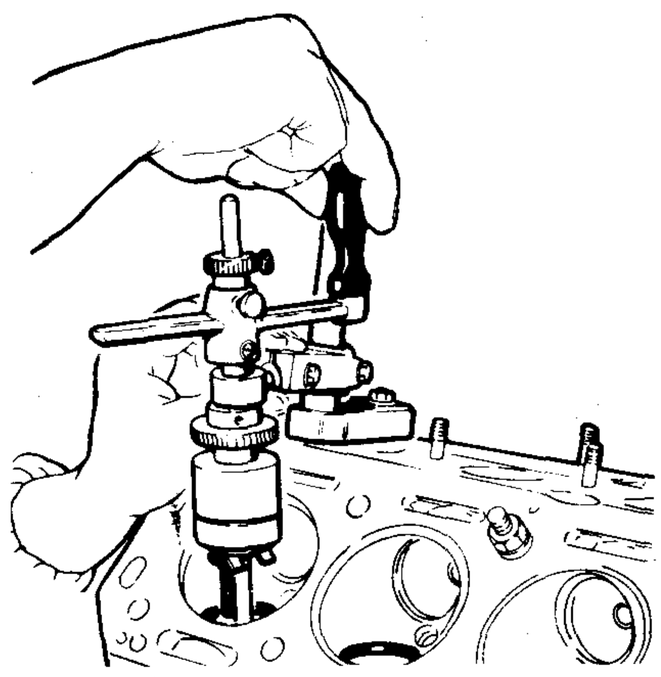

Seat angle is the same for both intake and exhaust valve seats, and should be:
120°

c. To produce correct seat angle, position grinder at 30°.

d. After machining, grind each valve into the associated seat using a suitable tool.

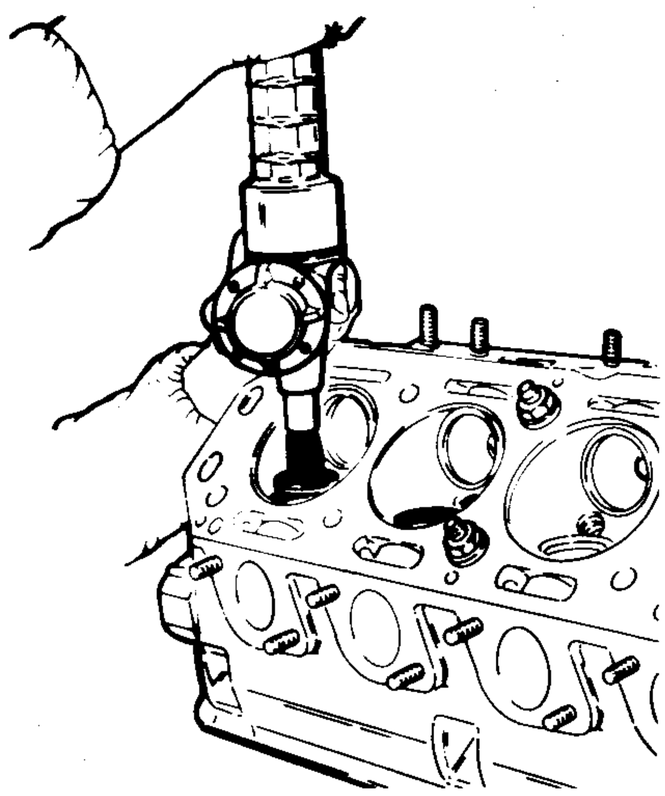

— When grinding valves and seats, use SIPAL AREXONS Carbosilicium abrasive paste, Part No. 4100-31502.
— Lubricate valve stems with engine oil.
— Thoroughly clean valves and seats using kerosene or solvent.

VALVE SPRINGS

Inspect valve springs for cracks or lack of tension. If poor spring performance is suspected, check inner and outer spring compressed length against specifications using a suitable tester.

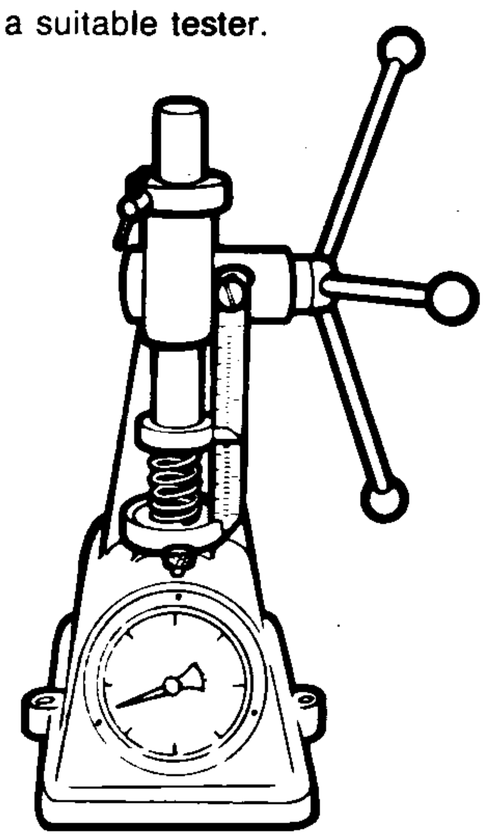

Inspection load N (kg) (lb)

Spring	Engine 016.00 - 016.78	Engine 016.55
Outer	348.8 to 366.1 (35.67 to 37.33) (78.4 to 82.3)	379.5 to 395.2 (38.7 to 40.3) (85.3 to 88.9)
Inner	218.1 to 227.1 (22.24 to 23.16) (49.1 to 51.1)	218.1 to 227.1 (22.24 to 23.16) (49.1 to 51.1)

Spring	Engine 061.00 - 062.02 - 062.12 017.13 - 061.34
Outer	452.1 to 469.8 (46.10 to 47.90) (101.7 to 105.7)
Inner	243.9 to 252.3 (24.87 to 25.73) (54.9 to 56.7)

Spring compressed length mm (in)

Spring	Engine 016.00 - 016.78 016.55	Engine 017.13 - 061.00 062.02 - 062.12 061.34
Outer	27.5 (1.08)	25.5 (1.00)
Inner	26 (1.02)	23.5 (0.93)

ENGINE BLOCK

a. Inspect engine block for cracks or excessive wear in cylinder bores.
b. Thoroughly clean engine block faces with butyl acetate or methylethylketone to remove any gasket fragments.

MAIN AND CONNECTING ROD BEARINGS

a. Clean main and connecting rod bearings and check for scoring or scuffing.
b. In the event of excessive wear, scrap and replace all bearings.
c. Connecting rod and main bearing assembly to crankshaft must be carried out matching parts of the same grade, identified by paint marks of the same colour (RED or BLUE) applied on the side of each bearing and the associated crankshaft journal or crankpin.
d. Measure wall thickness of bearing halves using an outside micrometer and compare results with specifications.
Replace any excessively worn bearings.

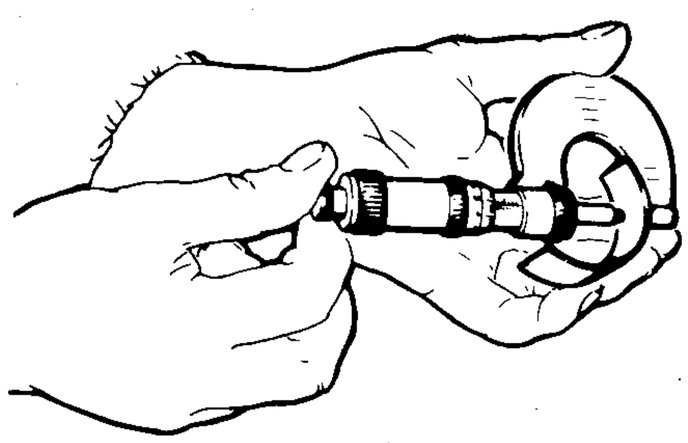

Grade	Bearing	
Red	Main	1.829 to 1.835 mm (0.0720 to 0.0722 in) 1.832 to 1.8410 mm (1) (0.0721 to 0.0725 in) (1)
	Conn. rod	1.829 to 1.835 mm (0.0720 to 0.0722 in)
Blue	Main	1.835 to 1.841 mm (0.0722 to 0.0725 in) 1.8365 to 1.8410 mm (1) (0.0723 to 0.0725 in) (1)
	Conn. rod	1.835 to 1.841 mm (0.0722 to 0.0725 in)

(1) For 062.24 engine (2000)

MAIN BEARING CAPS

a. Install main bearing caps (1) in engine block. Caps are numbered to ensure proper positioning.
b. Lubricate cap nuts and associated washers (2) in engine oil and tighten to the specified torque.

(T) : Tightening torque
Main bearing cap nuts
46 to 49 Nm
(4.7 to 5 kgm
33.9 to 36.1 ft.lb)

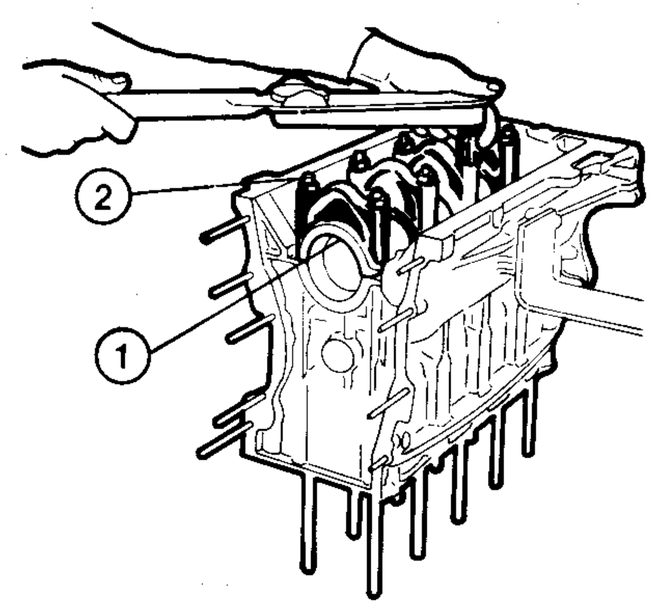

1. Main bearing caps
2. Nuts and washers

c. Using a bore gauge (1) with dial indicator (2), measure installed diameter of main bearings and compare with specifications.

Main bearing diameter:
63.647 to 63.666 mm
(2.5058 to 2.5065 in)

For 061.00 - 061.34 - 062.02 - 062.12 engines:
63.652 to 63.671 mm
(2.5060 to 2.5067 in)

For 062.24 engine:
63.652 to 63.664 mm
(2.5060 to 2.5065 in)

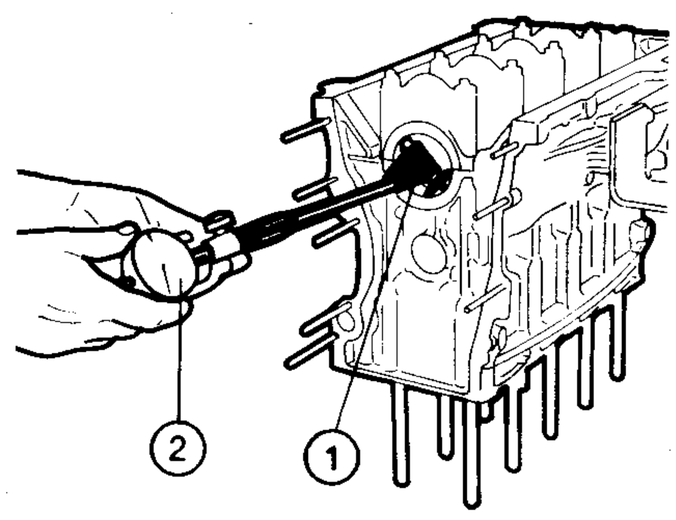

1. Bore gauge
2. Dial indicator

d. Check centre main bearing housing width.

Centre main bearing housing width:
25.15 to 25.20 mm (0.990 to 0.992 in)

THRUST RINGS

a. Measure thrust ring thickness and compare with specifications.

Thrust ring thickness:
2.310 to 2.360 mm (0.091 to 0.093 in)

For 061.34 and 062.24 engines:
2.311 to 2.362 mm (0.0910 to 0.930 in)

CAMSHAFT IDLER GEAR BUSHING

a. Using plug gauge **C.8.0103**, check the camshaft idler gear bushing for wear.

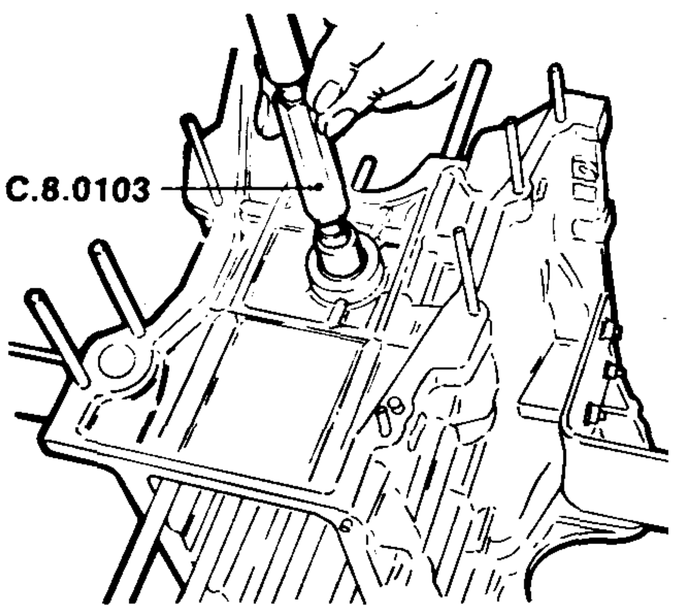

b. If replacement is necessary, remove bushing using puller **A.3.0210**. Also scrap and replace bushing on front cover at this time.

A.3.0210

CYLINDER LINER STAND-OUT

a. Thoroughly clean liners and insert in block.

b. Apply dial indicators to gauge **C.6.0148**. Place gauge on a surface plate and zero the dial indicators.

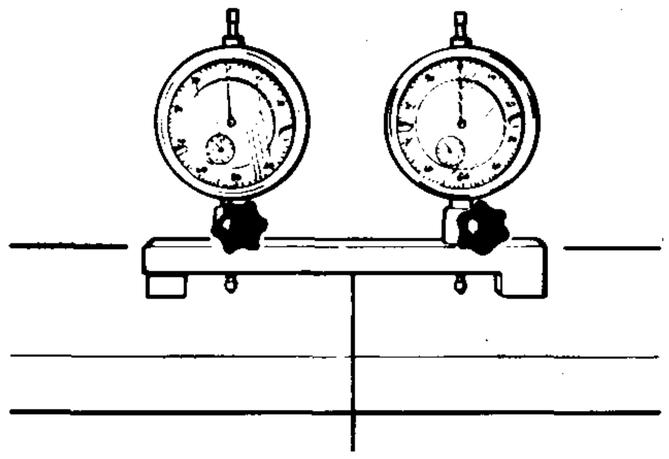

C.6.0148

c. Place gauge on cylinder block so that dial indicator styluses rest on edges of liner. Read liner stand-out off dial indicator.

d. Compare stand-out reading with specifications.

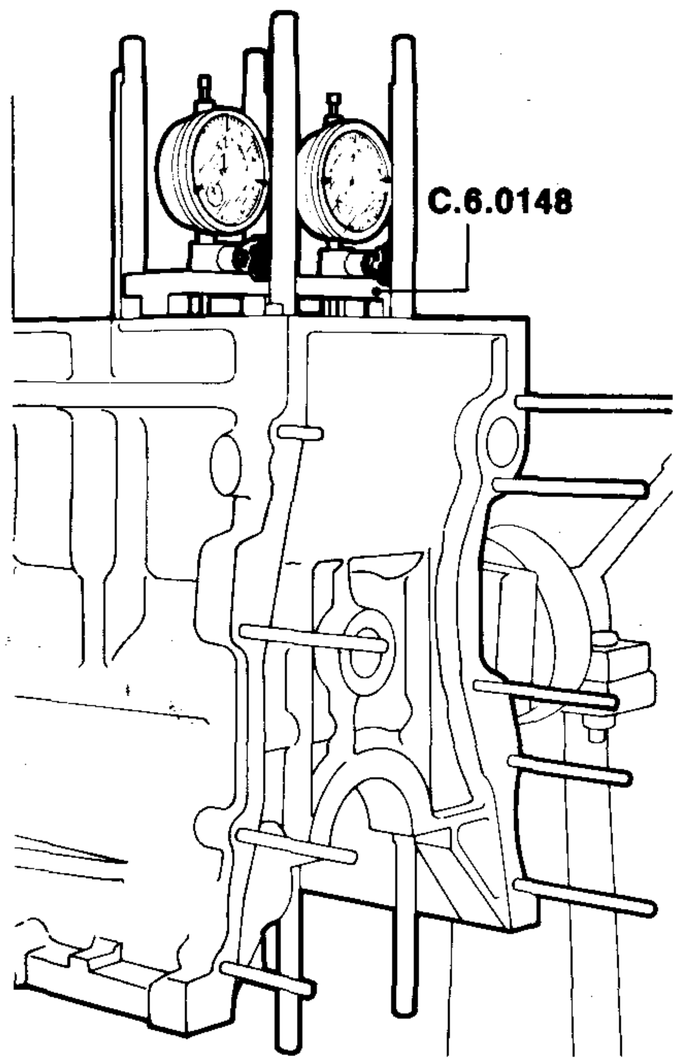

Cylinder liner stand-out:

016.00 engine =
0.00 to 0.06 mm (0.0000 to 0.0024 in)

016.78 - 062.02 - 016.55 - 061.00 - 062.12 - 017.13 - 061.34 - 062.24 engines =
0.01 to 0.06 mm (0.0004 to 0.0024 in)

e. If liner (1) stand-out must be checked with seals (2) installed, proceed as follows:

— Secure liners in block using retainers **A.2.0117**.

— Tighten retainer nuts to the specified torque.

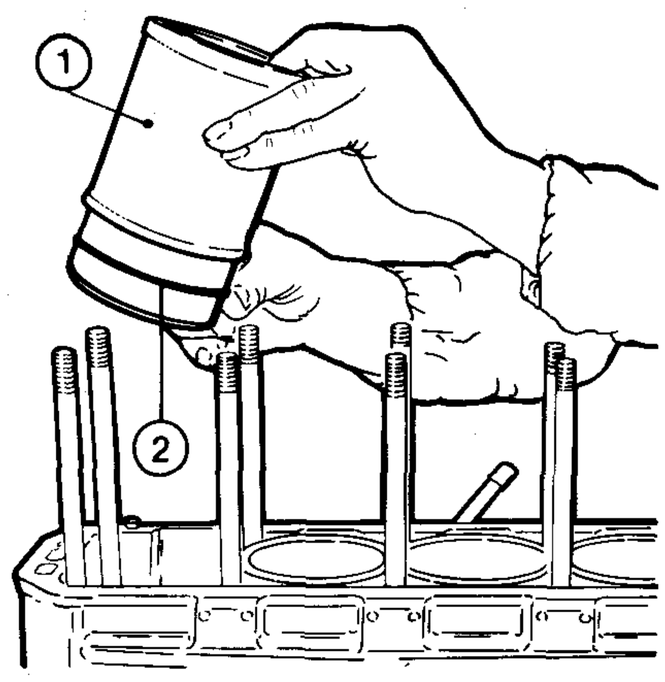

1. Cylinder liners
2. Seals

— Position gauge on block and check stand-out as directed in paragraph d.

(T) : 10 to 15 Nm
(1 to 1.5 kgm
7.4 to 11.0 ft.lb)

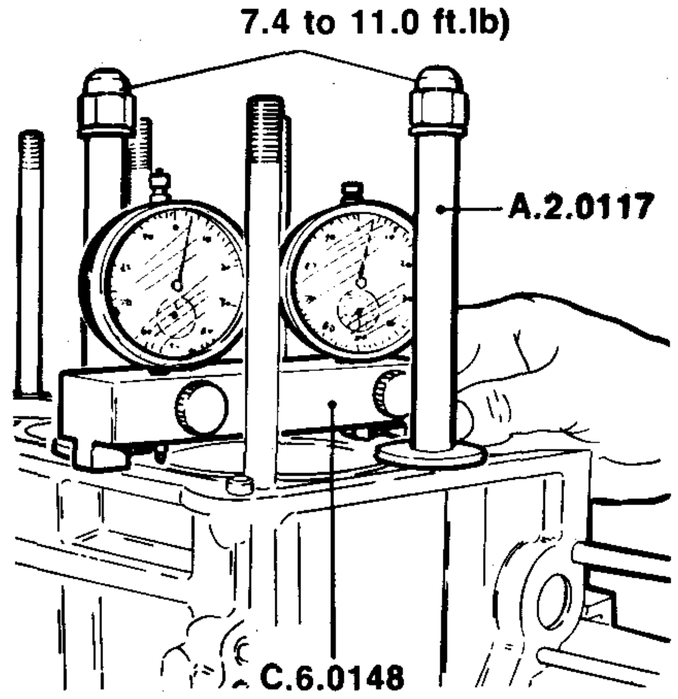

CRANKSHAFT

a. Examine crankshaft main journals and crankpins for uneven wear, scoring, scuffing or overheating.

NOTE:
Crankshaft has been carbonitrided, and thus cannot be reconditioned. Consequently, if measurements reveal excessive wear, crankshaft must be scrapped and replaced.

b. Measure crankshaft main journal and crankpin diameters and compare with data given in Inspection Specifications under Crankshaft.

Crankshaft main journals and crankpins are graded according to machining tolerances. Grades are identified by RED or BLUE paint marks.

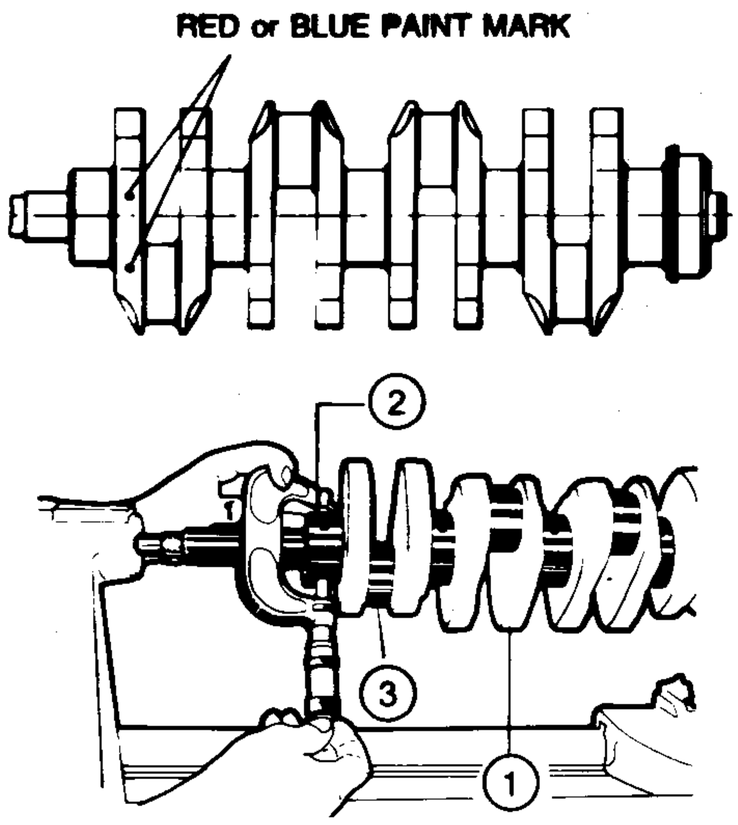

1. Crankshaft
2. Main journal
3. Crankpin

c. Measure main journal and crankpin diameter at several points to check for ovality.

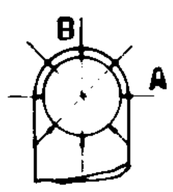

Maximum permissible main journal and crankpin ovality:
A-B = 0.007 mm (0.0003 in)

d. Measure main journal and crankpin diameter at points A and B shown below to check for taper.

Maximum permissible main journal and crankpin taper:
A-B = 0.01 mm (0.0004 in)

e. Support crankshaft on V-blocks or a lathe. Place dial indicator stylus in contact with main hournals and crankpins and compare dimensions with the following specifications:

Maximum main journal eccentricity:
0.04 mm (0.0016 in)

Maximum crankpin misalignment relative to main journals:
0.015 mm (0.0006 in)

Maximum crankpin centerline misalignment relative to main journal centerline:
0.3 mm (0.012 in)

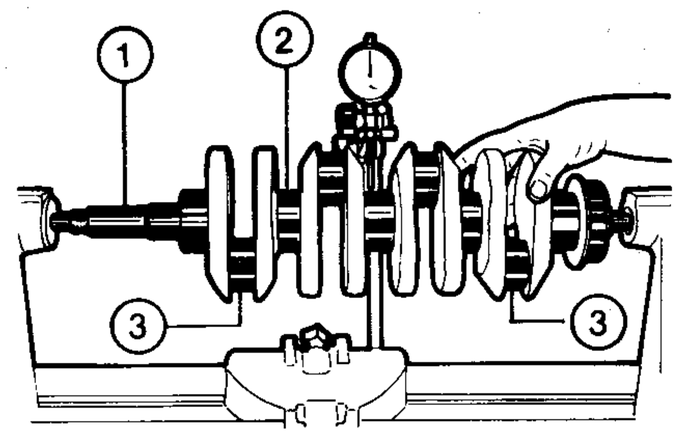

1. Crankshaft
2. Main journal
3. Crankpin

f. Check width of center main journal, which should be **30.000 to 30.035 mm (1.1811 to 1.1825 in).**

g. If the foregoing inspection shows crankshaft to be in good condition, clean oil passages as follows:

— Drill out the aluminum plugs blocking the oil passages.

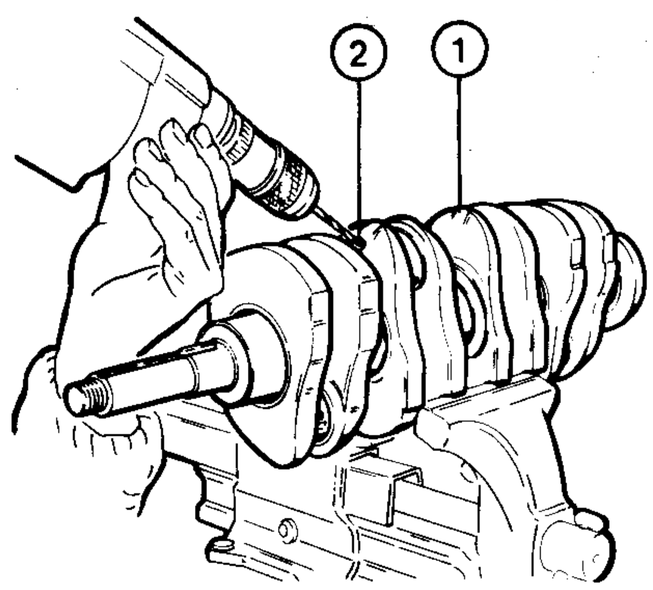

1. Crankshaft
2. Oil passages

— Clean oil passage using a wire brush.
— Clean the crankshaft and oil passages with hot fuel oil and dry with compressed air.
— Block passages with new aluminum plugs.
Stake plugs in place using a suitable tool.

CYLINDER LINERS

a. Note liner grade and check dimensions.

Liners are graded A, B, or C according to bore diameter. Grades are identified by paint marks on the outside of liners. Colour for each grade is as follows:

BLUE = A PINK = B GREEN = C

b. Refer to the Liner and Piston Inspection Specifications Table for the correct dimensions for each grade.

To check dimensions, proceed as follows:

— Zero the bore gauge on a suitable outside micrometer.
— Measure bore at the points indicated. Compare measurements to establish liner (1) taper and ovality.

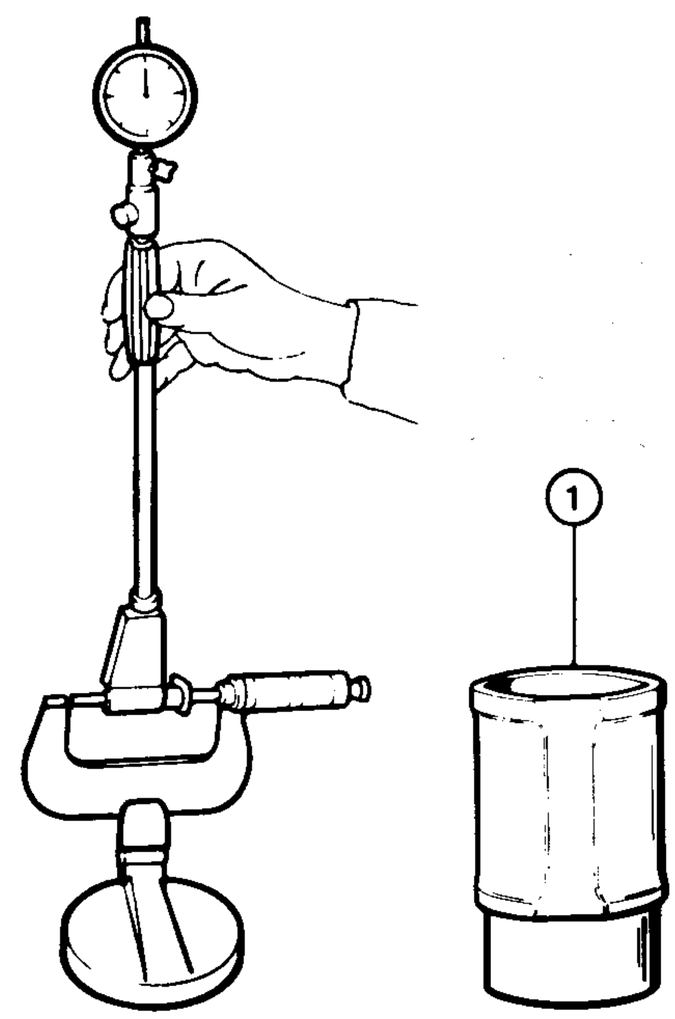

1. Cylinder liners

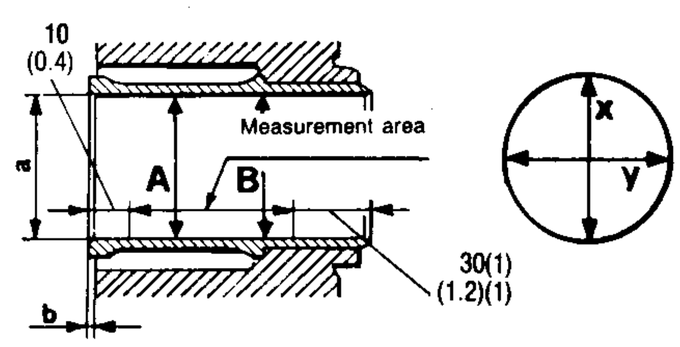

(1) 26 mm (1 in) for 062.12 engines

Maximum liner taper:
A-B = 0.01 mm (0.0004 in)

Maximum liner out-of-round:
X-Y = 0.01 mm (0.0004 in)

— Compare results of measurements with nominal dimensions for each liner grade and determine maximum wear.

PISTONS AND CONNECTING RODS

a. Remove compression rings and oil control ring together with expander spring as shown.

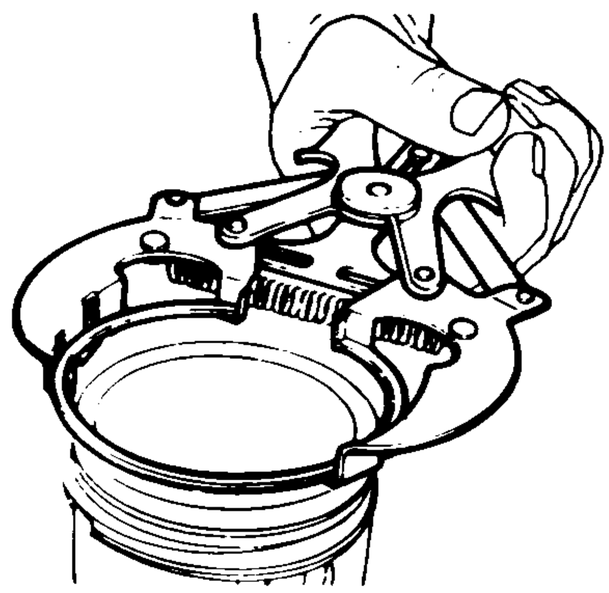

b. Using a screw driver, remove piston pin retaining ring.
c. Withdraw piston pin and separate connecting rod from piston.
d. Thoroughly inspect pistons for score marks on skirt or damaged ring grooves. Damaged or scored pistons must be scrapped and replaced.
Like the cylinder liners, pistons are graded according to machining tolerances.
Grades are identified by paint marks on the piston head.
Colour for each grade is as follows:
BLUE = A PINK = B GREEN = C
e. Using an outside micrometer, measure the diameter of the piston skirt at right angles to the piston pin bore and at the following distance from the bottom edge of the skirt:

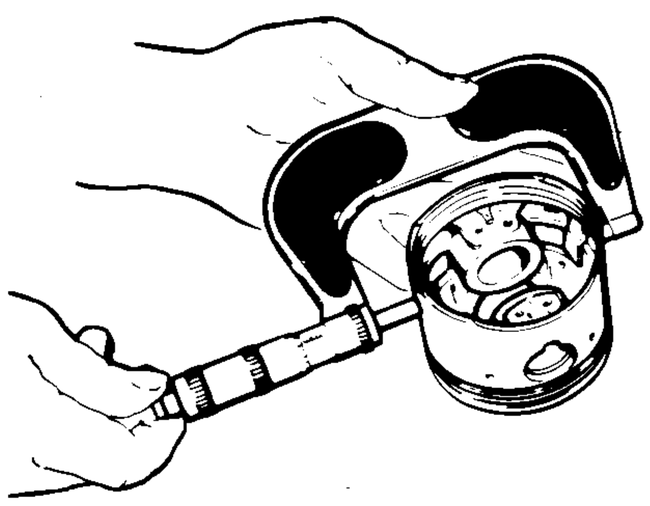

016.00 - 061.00 engines:
Borgo piston: 17 mm (0.67 in)
Mondial piston: 20 mm (0.79 in)

016.78 - 061.34 - 062.02 engines:
15 mm (0.59 in)

016.55 - 062.12 - 017.13 engines:
17 mm (0.67 in)

062.24 engine:
Borgo piston: 17 mm (0.67 in)
Mondial piston: 19 mm (0.75 in)

Compare results of measurement with tolerances given on Piston Specifications Table.
f. Check pin bores in piston and conneting rod for excessive wear.
g. Measure pin diameter with an outside micrometer. Measure piston bore diameter using a bore gauge. Compare measurements with specifications for the grade concerned.

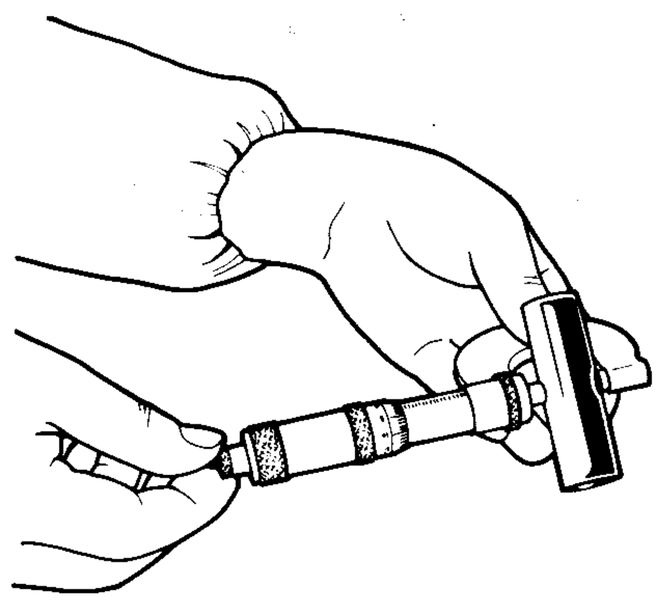

Piston pin bore diameter:

Black	**22.000 to 22.002 mm**
	(0.86614 to 0.86622 in)
	22.001 to 22.003 mm (1)
	(8.8662 to 0.8663 in) (1)
	22.000 to 22.0025 mm (2)
	(0.86614 to 0.86624 in) (2)
White	**22.003 to 22.005 mm**
	(0.86626 to 0.86634 in)
	22.0025 to 22.005 mm (2)
	(0.86624 to 0.86634 in) (2)

(1) For 061.34 engine only
(2) For 062.24 engine only

Pin diameter:

Black	**21.994 to 21.997 mm**
	(0.8659 to 0.8660 in)
White	**21.997 to 22.000 mm**
	(0.8660 to 0.8661 in)

h. Measure thickness of compression and oil control rings. Install rings in a suitable checking fixture or in cylinder liner and check ring gap «A» with a feeler gauge.

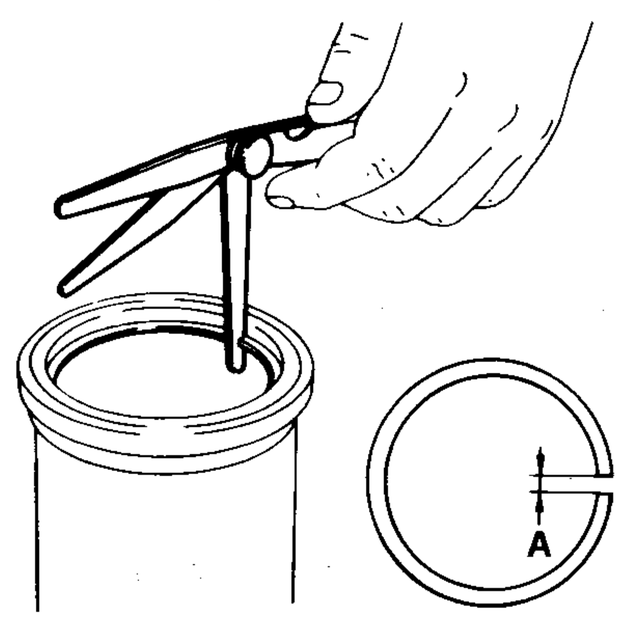

Measure ring clearance in groove using a feeler gauge.
Compare results of measurement with dimensions and tolerances given in «Piston and Piston Ring Inspection Specifications Table».

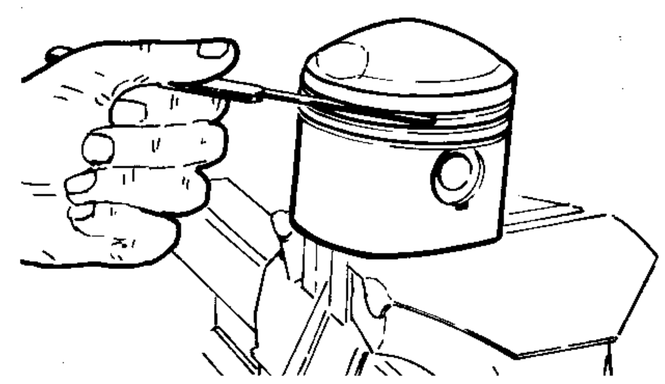

i. Match piston pins with pistons of the same grade.
Grade is identified by WHITE or BLACK paint marks on the inside of the pin and on the pin boss in the piston.
j. Pistons and pins may be reused if contact surfaces, particularly those in the piston bosses, are completely free from scratches or scoring of any kind.
k. Install pins in pistons of the same grade and fit retaining rings. Using a balance scale similar to that shown, **check that the weight difference between pistons does not exceed 4 grams (0.14 oz). For 062.24 engine check that the difference does not exceed 2 grams (0.07 oz).**

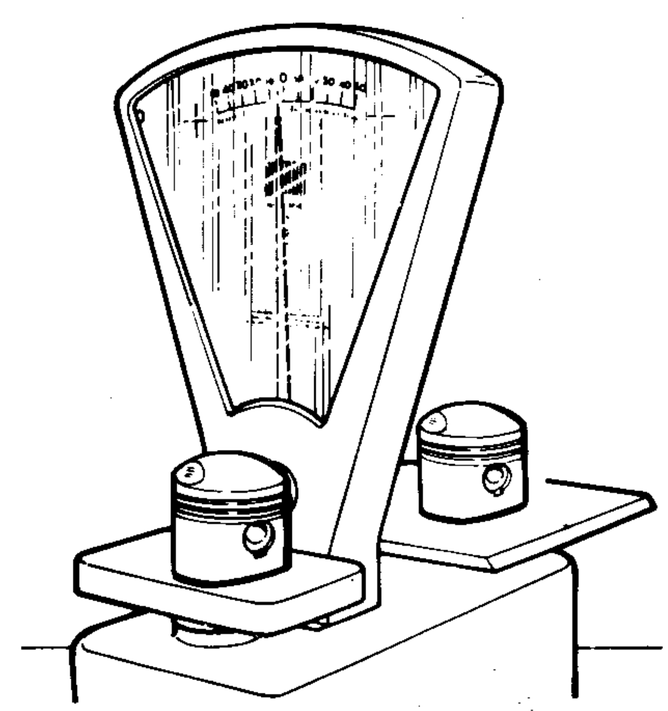

l. Examine connecting rods for cracks, scoring or signs of excessive wear. If connecting rods and caps are undamaged, carry out the measurements described below to determine whether they may be reused.
m. Measure fitted diameter of small end bushing using a bore gauge and dial indicator.

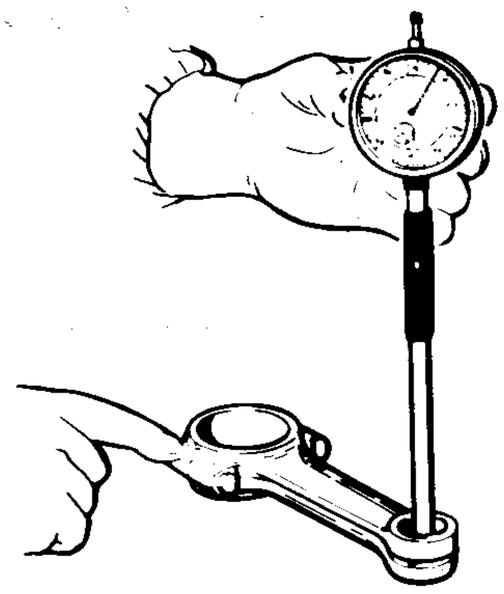

Small end bushing fitted diameter:
22.005 to 22.015 mm
(0.8663 to 0.8667 in)

n. Install connecting rod caps, lubricate nuts and washers in oil and tighten to the specified torque.
Measure big end bore as described in paragraph m. above.

(T) : Tightening torque
Connecting rod cap nuts (wet)
49 to 52 Nm
(5 to 5.3 kgm
36.1 to 38.4 ft.lb)

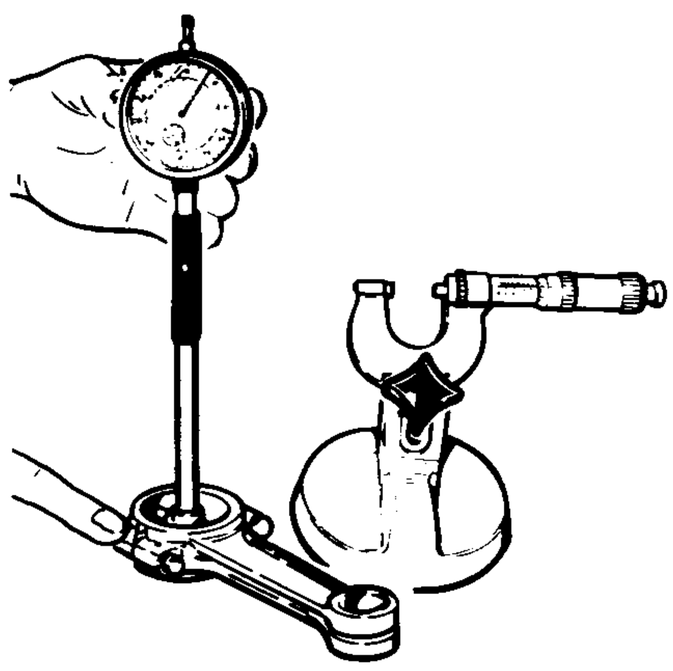

Big end bore diameter:
53.695 to 57.708 mm
(2.1140 to 2.1145 in)

o. Using a balance scale similar to that shown, check that the weight difference between connecting rods complete with caps and fasteners **does not exceed 2 grams**.

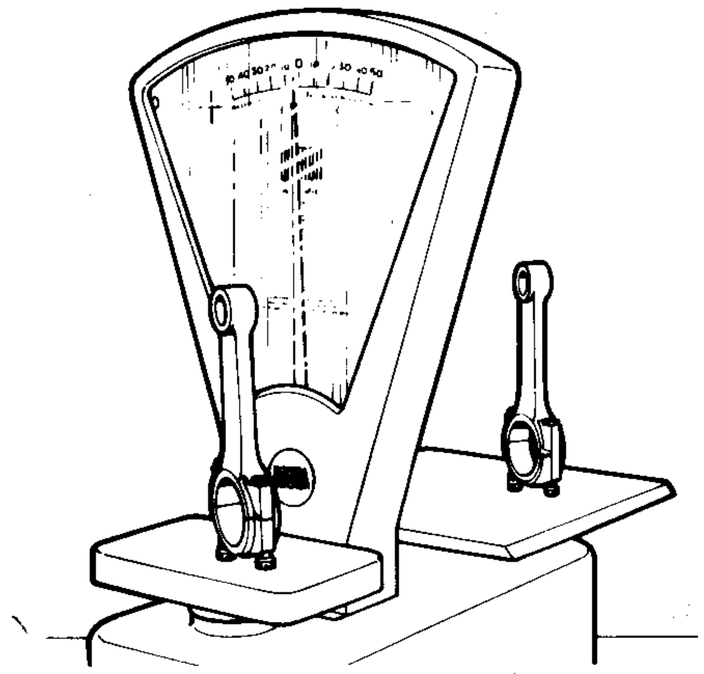

p. Check alignment of connecting rods (1) using a fixture as shown.

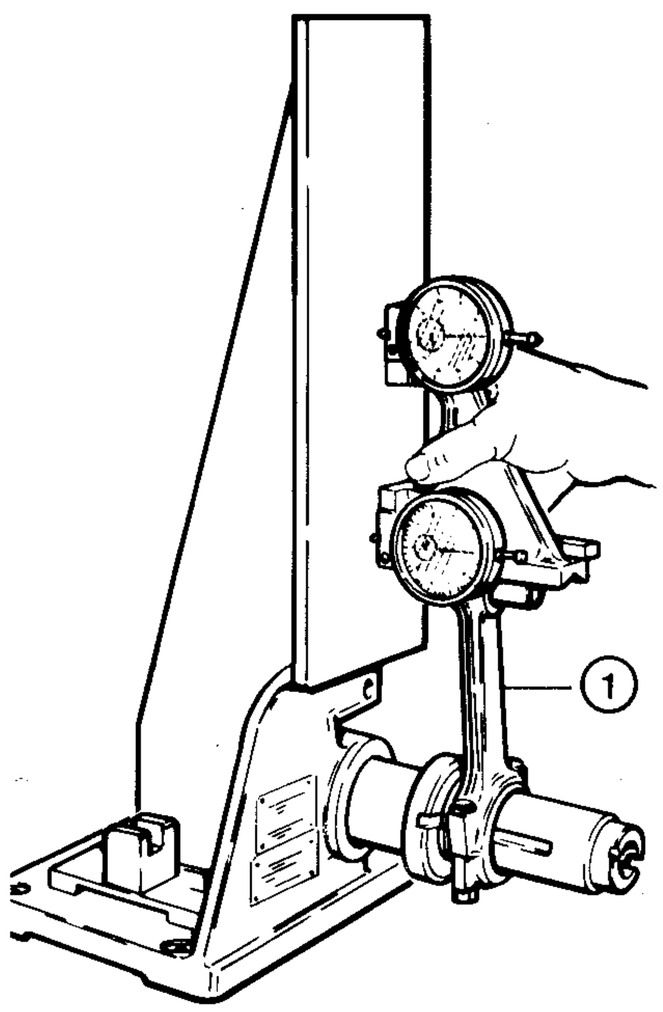

1. Connecting rod

NOTE:
Misaligned connecting rods must be scrapped and replaced, as they impose excessive loads on bearings, pistons and cylinder walls, which leads to irregular piston and rod wear.

CYLINDER LINER, PISTON AND CONNECTING ROD MATCHING

a. **Cylinder liners and pistons.** Cylinder liners and pistons must be paired using parts of the same grade, identified by paint marks of the same colour on the piston head and on the outside of the cylinder liner as described in the foregoing paragraphs.

Liner/piston clearance:

016.00 - 061.00 - 062.02 - 016.78 engines:
0.030 to 0.049 mm
(0.0012 to 0.0019 in)

016.55 - 061.34 - 062.12 - 017.13 - 062.24 engines:
0.040 to 0.059 mm
(0.0016 to 0.0023 in)

b. **Pistons and pins.** Pistons and pins must be paired using parts of the same grade, identified by paint marks of the same colour on the inside of the pin and on the piston boss.

Pin/piston bore clearance:

Black and white:	**0.003 to 0.008 mm (0.00012 to 0.00031 in)**
061.34 engine:	
Black	**0.004 to 0.009 mm (0.00016 to 0.00035 in)**
White	**0.003 to 0.008 mm (0.00012 to 0.00031 in)**
062.24 engine:	
Black	**0.003 to 0.0085 (0.00012 to 0.00033 in)**
White	**0.0025 to 0.008 mm (0.00010 to 0.00031 in)**

c. **Pistons and connecting rods.** Connecting rods must be installed with the offset facing towards the intermediate main journals.
For 1800 and 2000 engines, pistons must be positioned with the arrow stamped on the head toward the exhaust side.

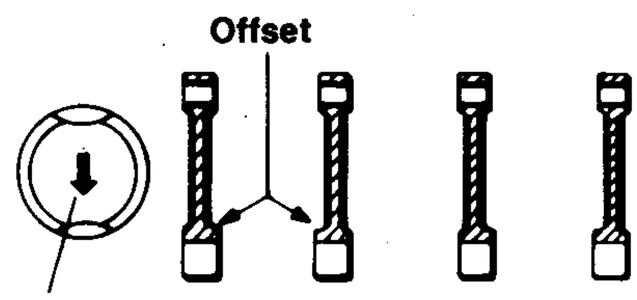

Arrow
1800 and 2000 cc engines only)

Pin/small end clearance:

Black	**0.008 to 0.021 mm (0.0003 to 0.0008 in)**
White	**0.005 to 0.018 mm (0.0002 to 0.0007 in)**

d. Insert small end of connecting rod between piston bosses and align bores for piston pin installation.

e. Insert piston pin (2) through piston (4) and connecting rod (1). Secure pin with two retaining rings (3).

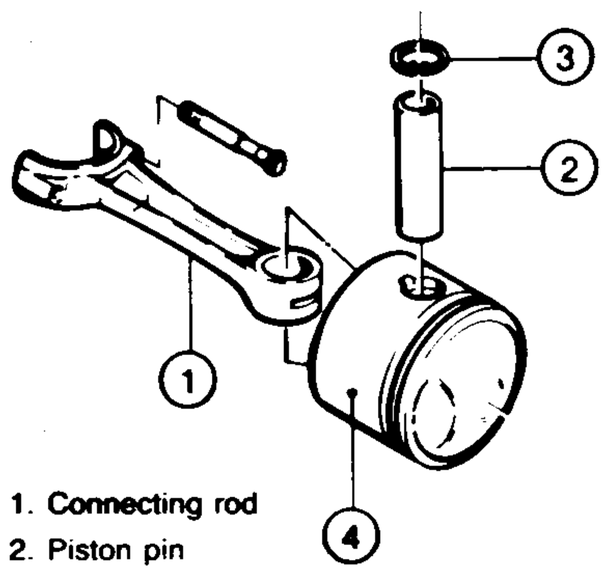

1. Connecting rod
2. Piston pin
3. Retaining rings
4. Piston

FLYWHEEL

a. Check inside diameter of center bushing.
If necessary, install a new bushing and ream to the specified size.

Flywheel center bushing I.D. (after reaming): 26.010 to 26.023 mm (1.0240 to 1.0245 in)

b. Check ring gear teeth for chipping or signs of pick-up.
If damaged, remove ring gear using a hydraulic press and replace.

c. Thoroughly clean mating surfaces of flywheel and new ring gear.
d. Heat the new ring gear evenly to 120 to 140°C (248 to 284°F).
Fit ring gear over flywheel and check that it is correctly seated.
e. Allow ring gear to cool slowly at room temperature.
Do not attempt to accelerate cooling.

ENGINE ASSEMBLY 1.6 1.8 2.0

CYLINDER HEAD ASSEMBLY

After inspecting as described above and replacing defective parts, assemble engine using the special purpose tools described during engine disassembly and the assembly tools indicated below.
a. Clamp support **A.2.0195** and fork **A.2.0196** in vice and install cylinder head on fork.
b. Fit bottom spring cups (1) and abutment washers (2) over intake and exhaust valve guides.

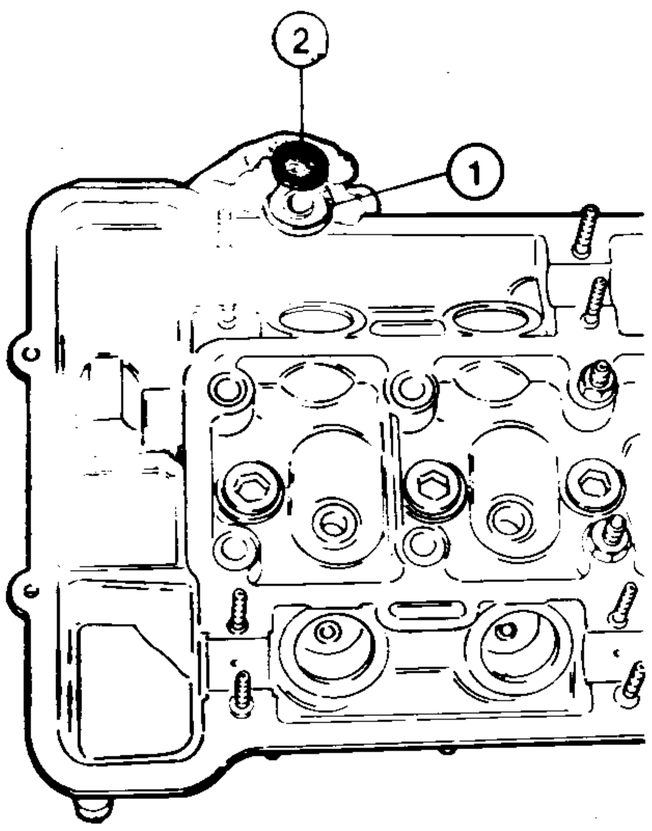

1. Bottom spring cup
2. Abutment washer

c. Install oil seals on intake valve guides using tool **A.3.0244**.

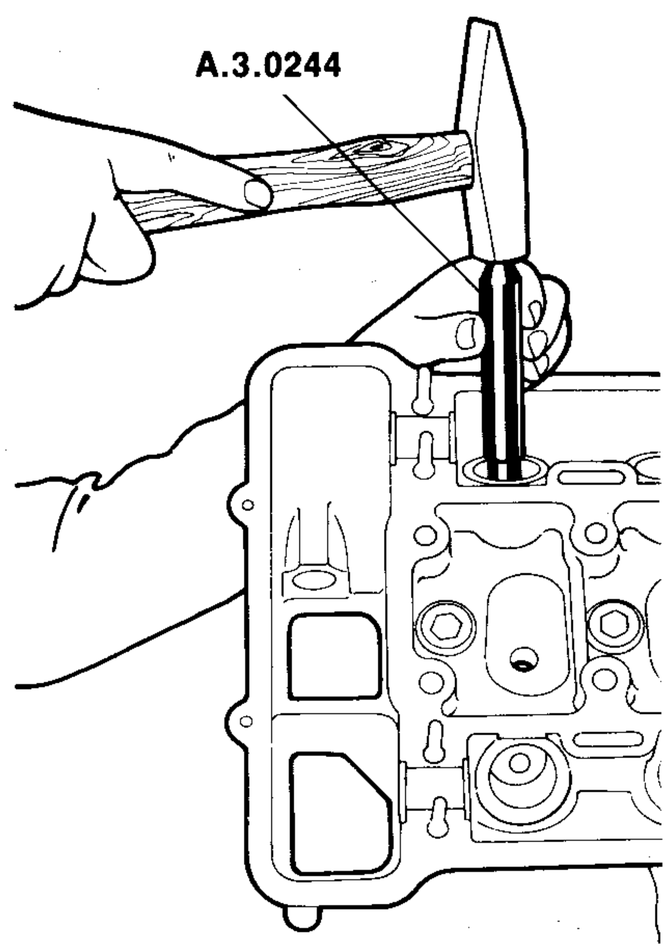

d. Lubricate valve stems with clean engine oil and install in the associated guides.
Retain valves using support tool **A.2.0192**.
Support should be secured to spark plug hole through the associated wing nut.

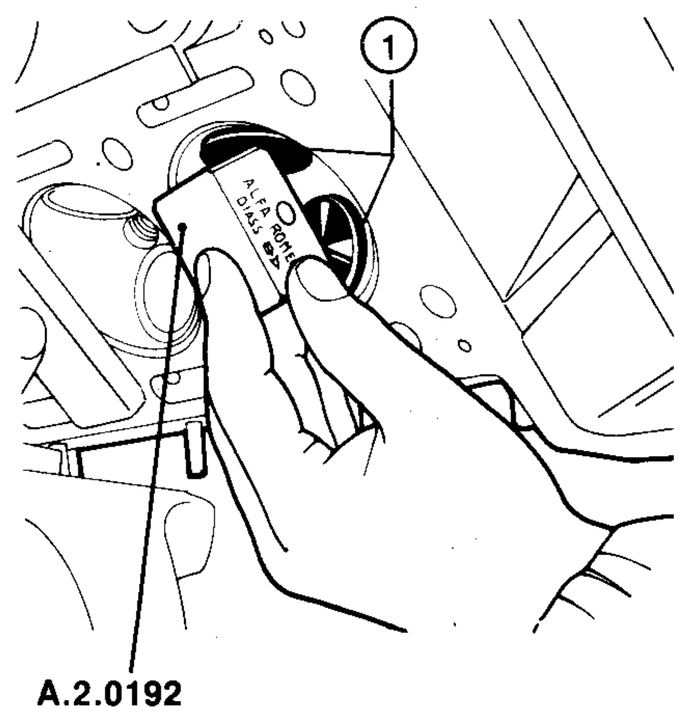

1. Valves

e. Insert inner springs (1), outer springs (2) and top spring cup (3) over valve stems. Damping coils of springs must face downward.

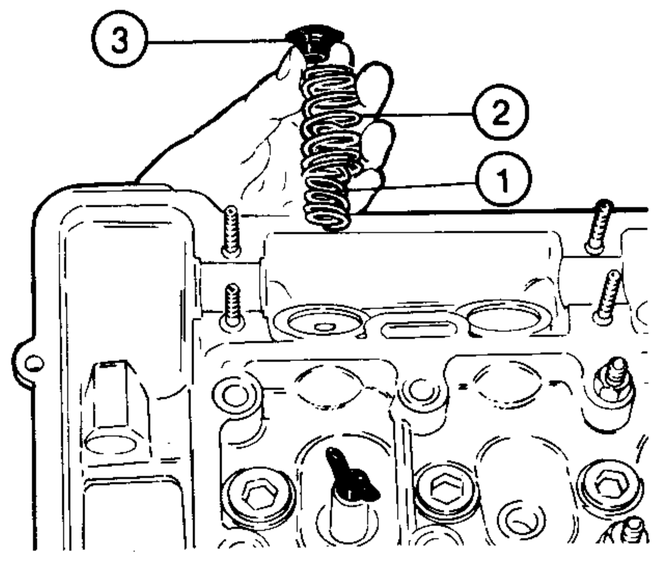

1. Inner springs
2. Outer springs
3. Top spring cups

f. Install support **A.3.0103/0010** on head center studs and, using spring compressor **A.3.0103/0006** and lever **A.3.0324**, compress springs and install spring retainer locks in grooves on valve stem.

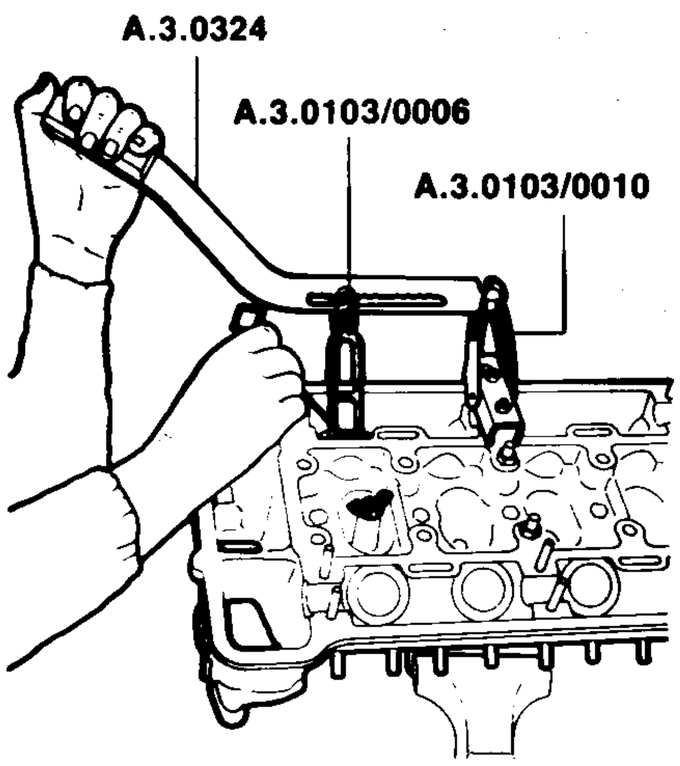

Valve leakage test.
Install spark plugs in seats.
Pour enough fuel in a combustion chamber to barely cover the head of the valve under test.
Introduce air at low pressure into the intake and exhaust passages and check for air bubbles in the fuel.
If leakage is detected, check that valves are properly seated and repeat leakage test.
If leakage persists, regrind the valve seats as described under «Inspection - Valves and valve seats».

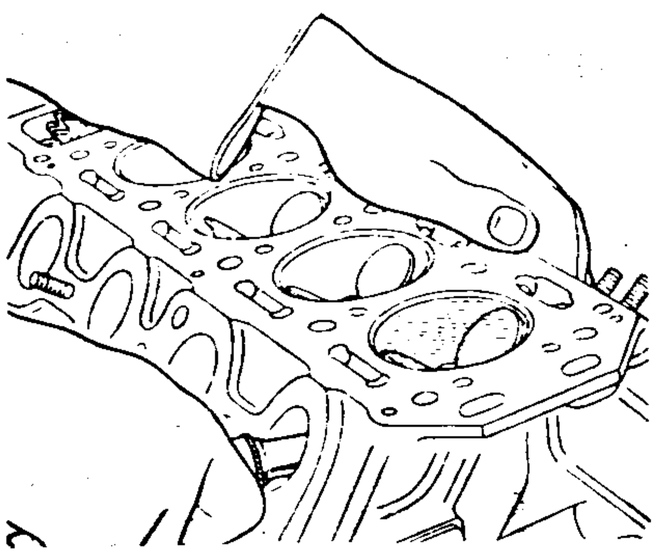

g. Install valve tip caps (1) ensuring that they are returned to their original positions.
Lubricate tappets (2) with clean engine oil and install in associated seats.

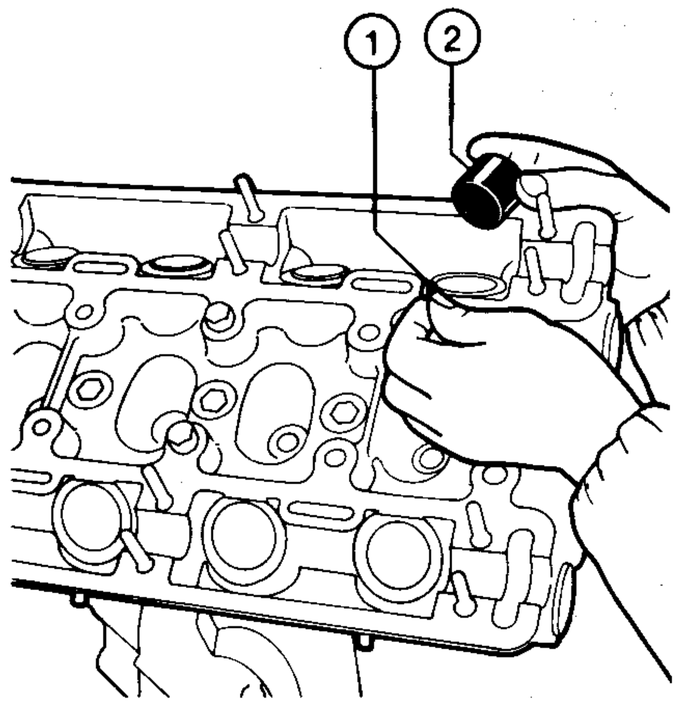

1. Valve tip caps
2. Tappets

h. Install flanges and woodruff keys on camshafts.
Position gears with washers, lockwashers and nuts.
Tighten nuts.
i. Using clean engine oil, lubricate camshaft journals (1) and housings (2) on cylinder head.

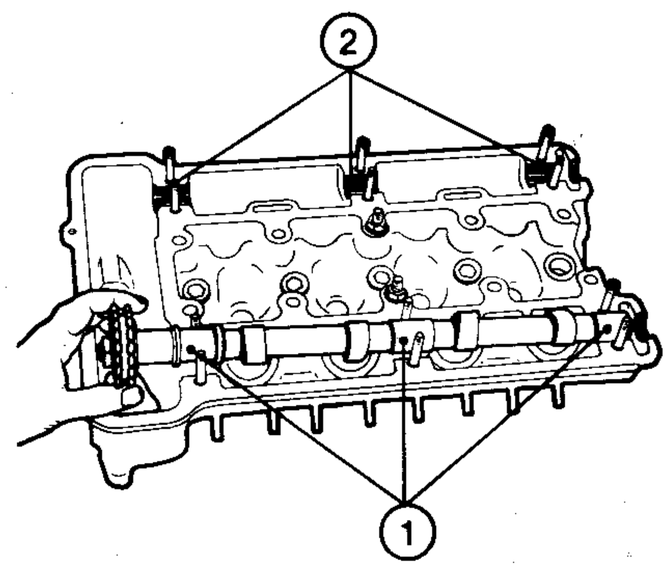

1. Camshaft journals
2. Housings

j. Position caps (1) in numerical order (numbers are marked on caps).
Lubricate nuts and washers (2) with engine oil and tighten to specified torque.
Check camshaft journal running clearance and camshaft end float against specifications.

(T) **Tightening torque**
Camshaft cap nuts (wet)
20 to 22 Nm
(2 to 2.25 kgm
14.8 to 16.2 ft.lb)

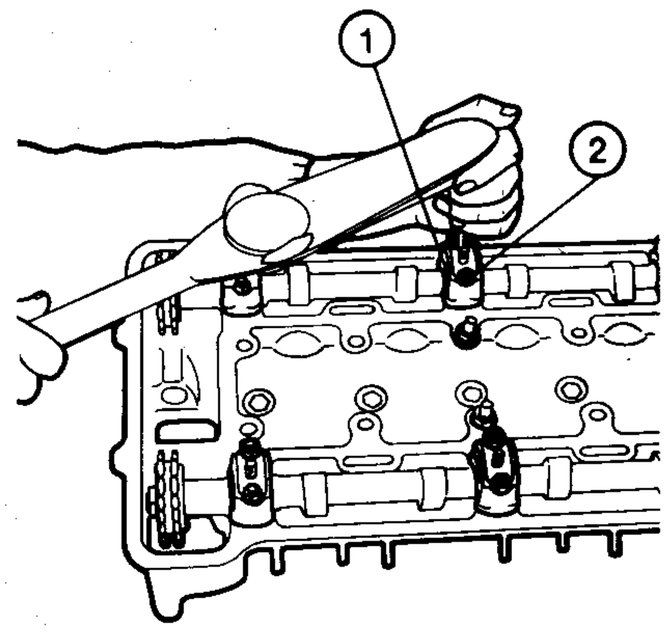

1. Camshaft caps
2. Nuts and washers

Camshaft journal running clearance:
0.020 to 0.074 mm (0.0008 to 0.0029 in)

Camshaft end float:
0.065 to 0.182 mm (0.0026 to 0.0072 in)

k. Using gauge **C.6.0168**, check clearance between cam heel radius and tappet head against specifications.
To adjust clearance, remove valve tip cap and install another of the correct thickness.
Use a suitable tool to check tip cap thickness.

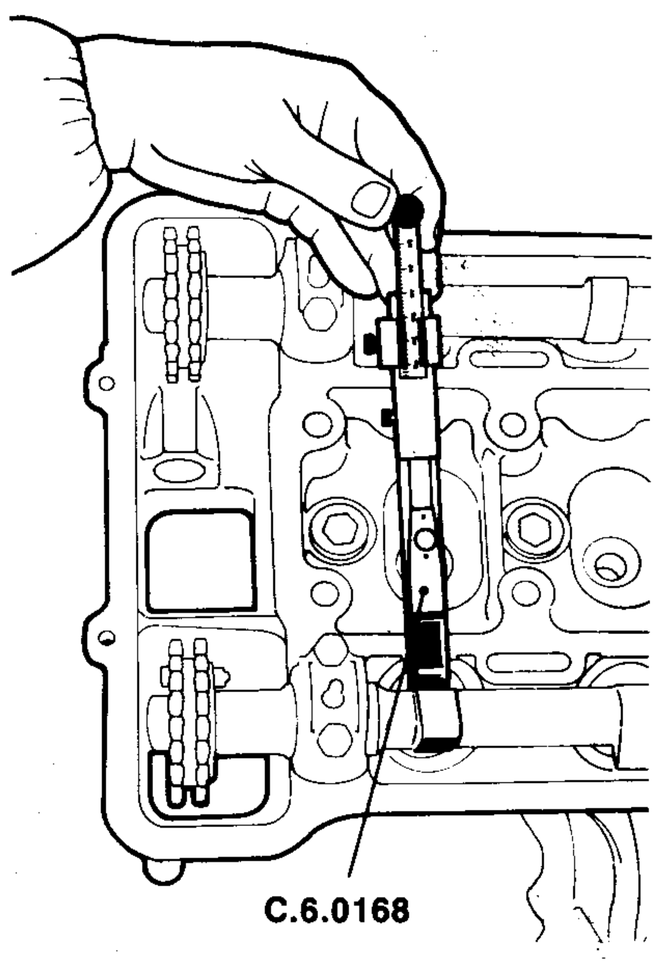

Valve clearance:

Intake:	**0.400 to 0.450 mm (0.0157 to 0.0177 in)**
Exhaust:	**0.450 to 0.500 mm (0.0177 to 0.0197 in)**
Exhaust:	**0.500 to 0.600 mm (1) (0.0197 to 0.0236 in) (1)**

(1) For 061.34 engine only

l. **Grease chain tensioner spring and insert** in tensioner. Insert spring retainer plate in slot on tensioner and install tensioner assembly in seat on cylinder head.
Install **screw** as shown **below**, ensuring that it is **aligned** with hole on spring retainer plate.

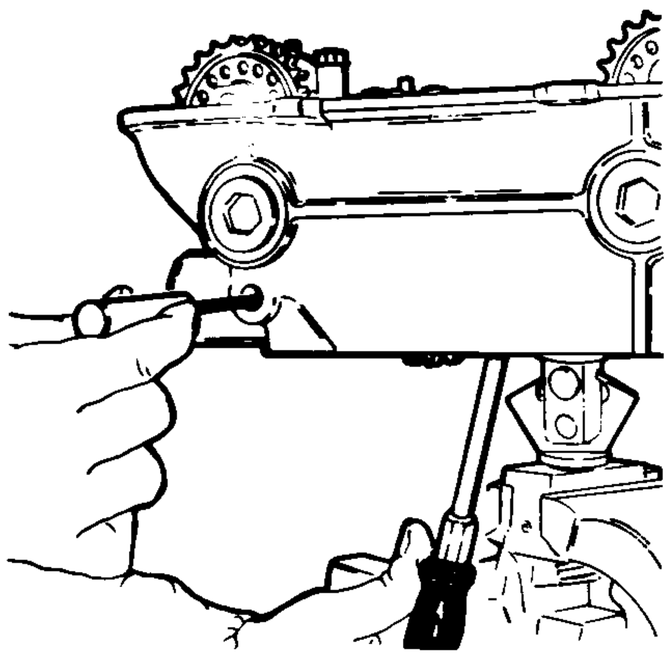

m. If a new cylinder head is used, restore timing marks on front camshaft caps (1) using a suitable tool (2).

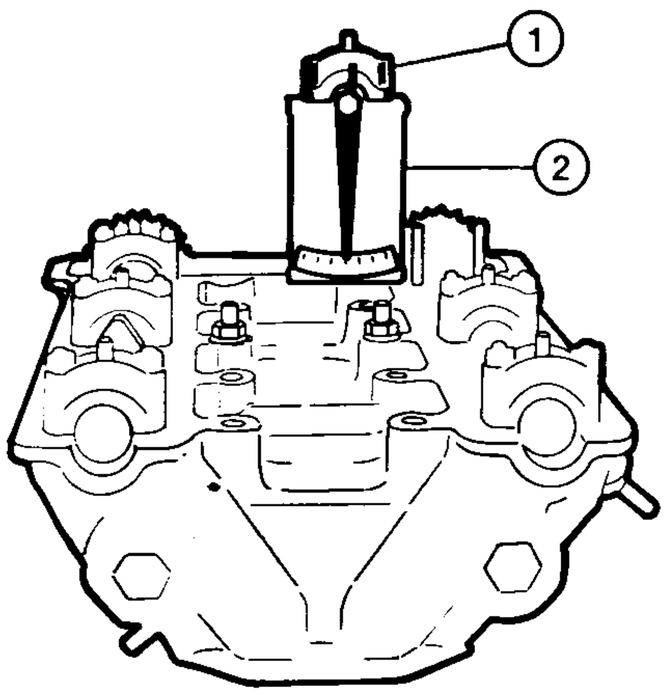

1. Front caps
2. Timing tool

Angular position of timing mark on front bearing cap

	Engine		
	016.00	016.78 016.55	061.34
Intake (β)	+1°	—0°15'	—1°20'30"
Exhaust (α)	—4°	+0°15'	—7°

	Engine	
	017.13	062.02 - 061.00 - 062.12
Intake (β)	+12°45'	—2°04'
Exhaust (α)	—1°	—1°06'

ENGINE BLOCK ASSEMBLY

CRANKSHAFT

a. **Install crankshaft in block as follows:**
— Install the main bearing halves in the block and **lubricate with oil.**
Crankshaft (2) must be matched with main bearings of same grade, identified by paint marks of the same colour (RED or BLUE) applied on the side of each bearing (1) and associated crankshaft journal.

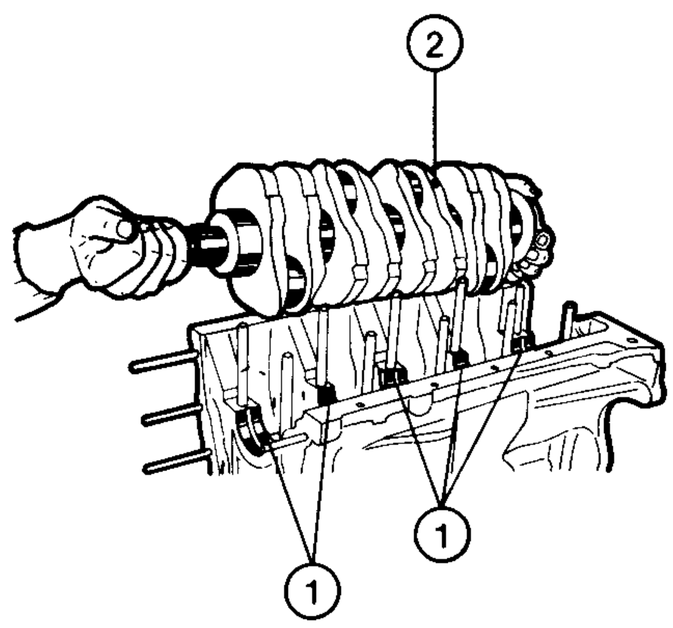

1. Top main bearing halves
2. Crankshaft

— **Lubricate** crankshaft journals and position crankshaft (1) over main bearings.
— Insert thrust ring halves in seat on center main bearing.
Rotate crankshaft to settle thrust rings.
When installing thrust rings, make sure that oil grooves face crankshaft throws.

b. **Main bearing cap installation.**
— Install bearing halves in caps and **lubricate with oil.**
— Install center bearing cap (2) together with bearing half and thrust ring halves (3). Parts should be postioned as indicated by number on bearing cap.

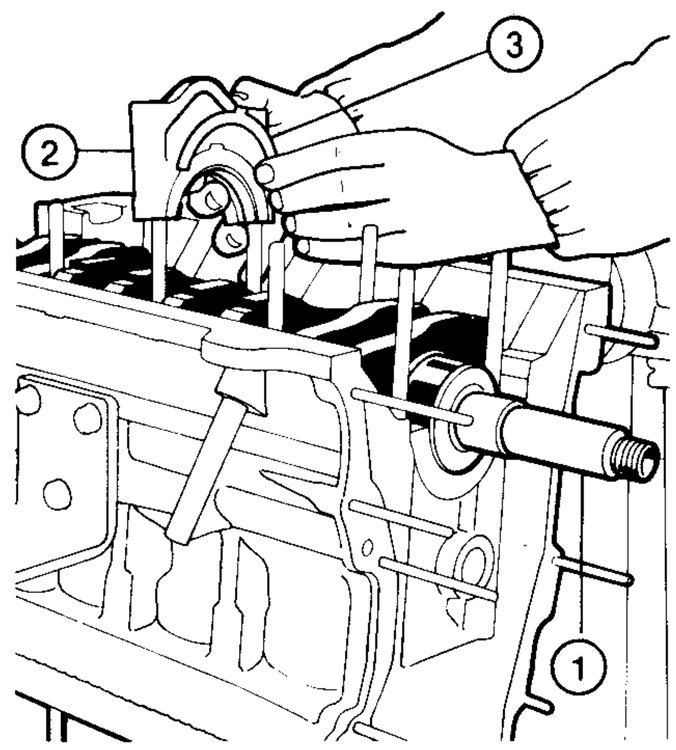

1. Crankshaft
2. Center main bearing cap
3. Thrust ring half

— Install front and rear bearing caps (1) together with associated bearing halves. Parts should be positioned as indicated by numbers on bearing cap.
— **Lubricate** nuts and washers (2) with engine oil. Start nuts until they are finger tight.

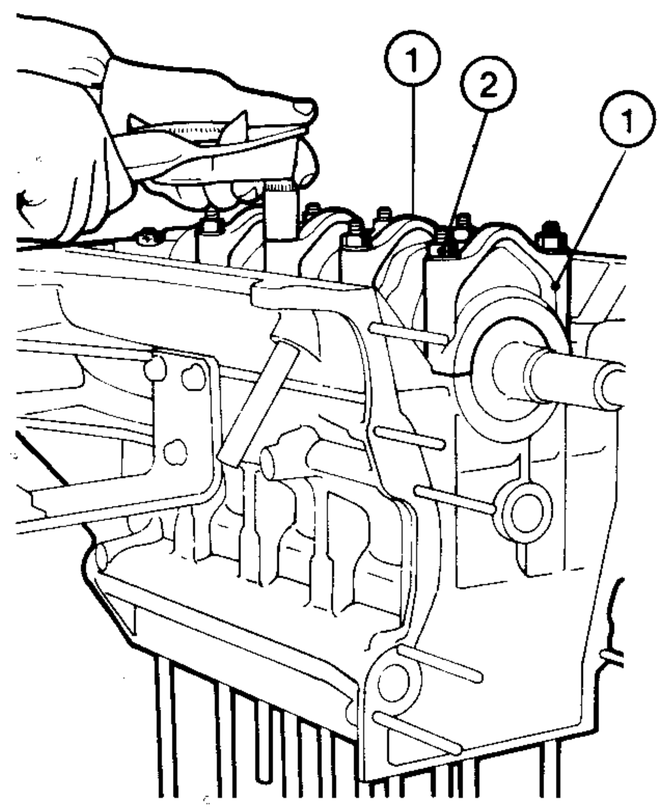

1. Main bearing caps
2. Nuts and washers

— Tighten the bearing cap nuts to the specified torque in two or three stages.

(T) **: Tightening torque**
Main bearing cap nuts (wet)
46 to 49 Nm
(4.7 to 5 kgm
33.9 to 36.1 ft.lb)

c. **Crankshaft end play check.**
— Apply a dial indicator (1) with magnetic base on engine block so that indicator stylus a contacts crankshaft parallel to crankshaft centerline.

— Using a screwdriver (2), force crankshaft (3) away from dial indicator and note the amount of end play shown on the indicator. Compare end play with specifications.

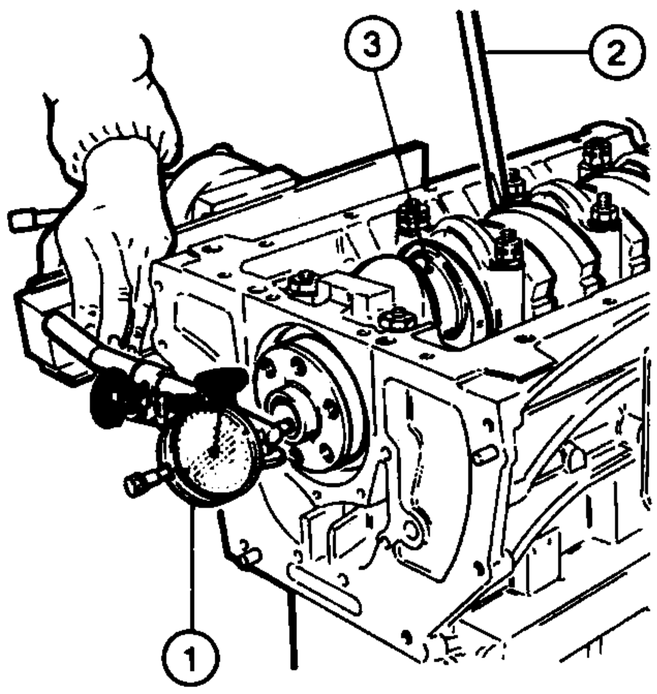

1. Dial indicator
2. Screwdriver
3. Crankshaft

Crankshaft end play:
0.080 to 0.265 mm (0.0031 to 0.0104 in)

d. Bend down lockwasher tabs on rear main bearing cap nuts.
e. Tighten locknuts on the remaining bearing caps to the specified torque.

(T) : Tightening torque
Main bearing cap locknuts
11 to 13 Nm
(1.1 to 1.3 kgm
8.1 to 9.6 ft.lb)

f. Lubricate seals (1) with 50HB-5100 lubricant or MILLOIL (Part No. 4500-17502) and install at rear of block using tool **A.3.0113**.

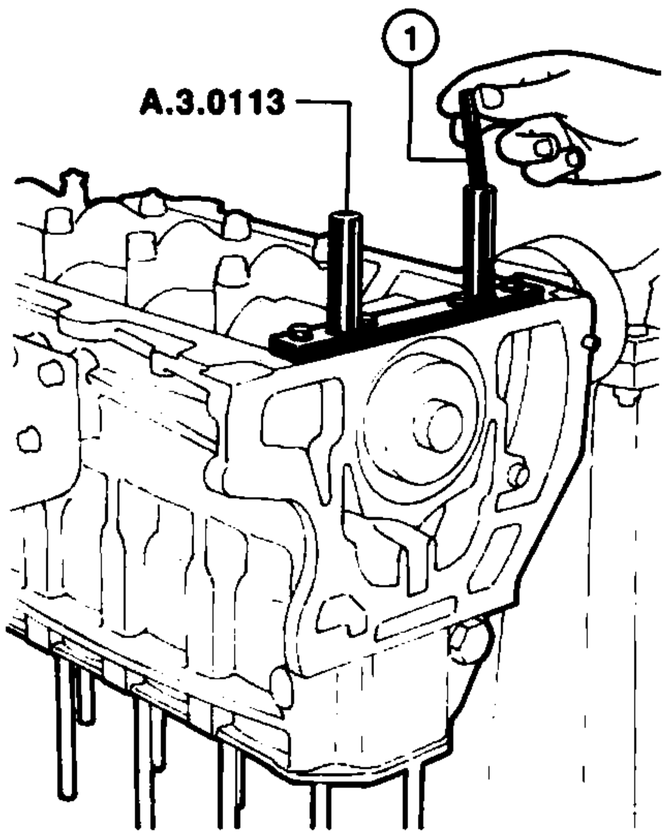

1. Seals

g. **Timing drive idler shaft bushing reaming.**
— Plug oil hole on block bushing.
— Remove key from crankshaft and provisionally install front cover (1), securing through associated nuts (2).
— Place a suitable guard (3) over cover studs.
— Dress bushings using roughing reamer **U.2.0040** and finishing reamer **U.2.0041**.

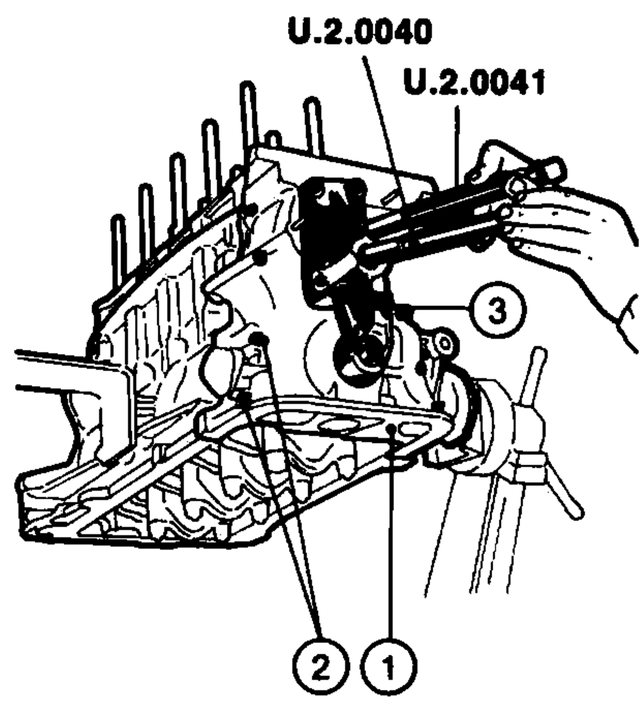

1. Front cover
2. Nuts
3. Guard

— Remove guard (3) and thoroughly clean bushings. Check bushing diameter using plug gauge **C.8.0103**.

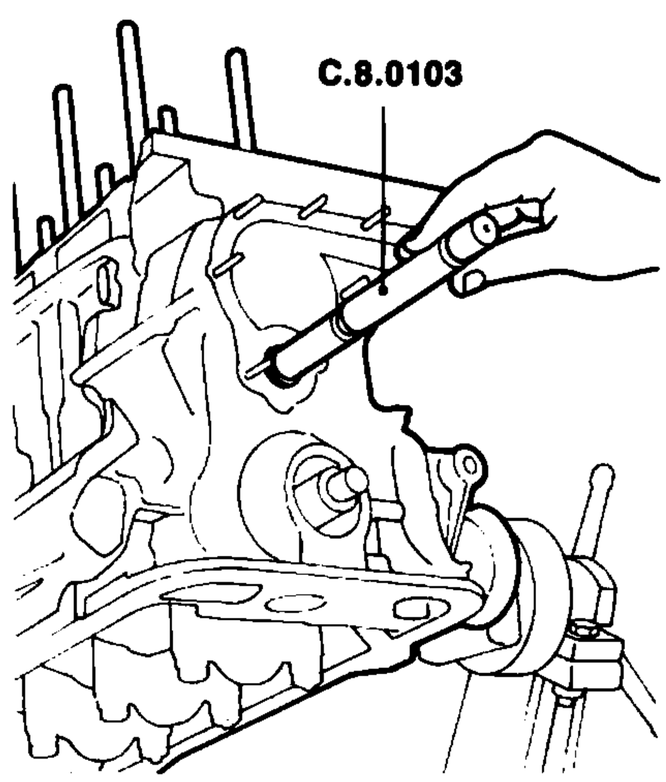

Idler shaft bushing fitted I.D.
(after reaming):
20.667 to 20.698 mm
(0.8137 to 0.8149 in)

— Remove front cover and measure diameter of block bushing as described above.

h. Lubricate crankshaft rear seal (1), using engine oil for the outer surface and ISECO (Part No. 3671-69841) for the lip. Install seal using tool **A.3.0178**, taking care to position seal correctly.

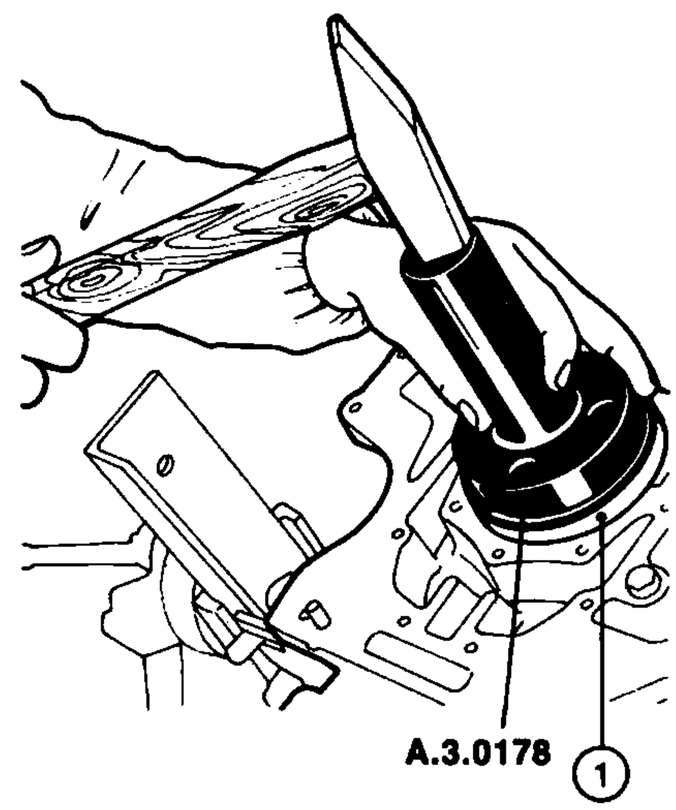

1. Rear seal

i. Install rear cover (1) and gasket on engine block, securing with screws and washers (2).
Fit spacer (3).

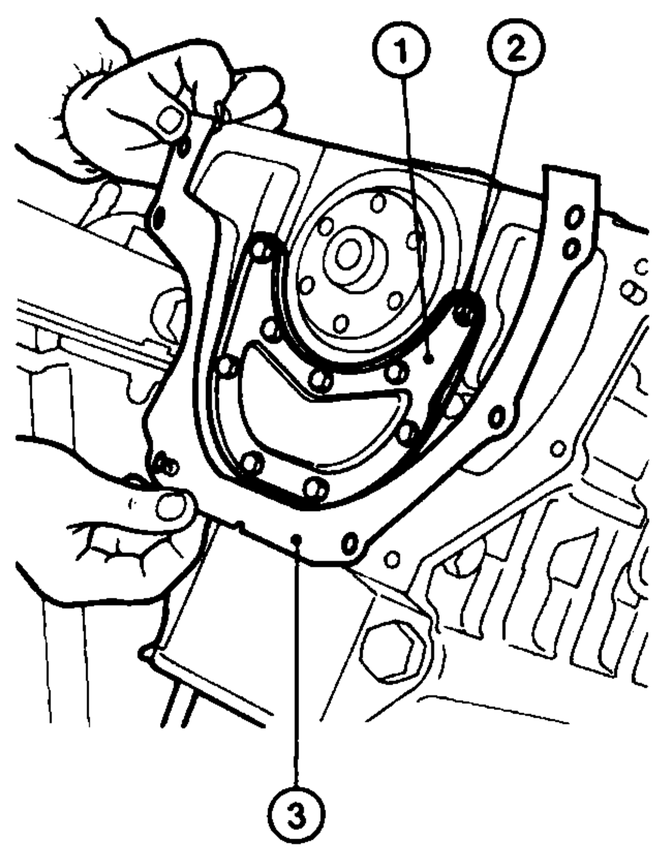

1. Rear cover
2. Screws and washers
3. Spacer

j. **Flywheel installation.**
— Rotate crankshaft until crankpins in cylinders No. 1 and No. 4 are vertical (i.e. at top dead center).

— Position flywheel (1) on crankshaft and check that the locating hole on flywheel edge is 31°30' before the P.M.S. (P.M.S. = T.D.C.) reference mark on the engine block.

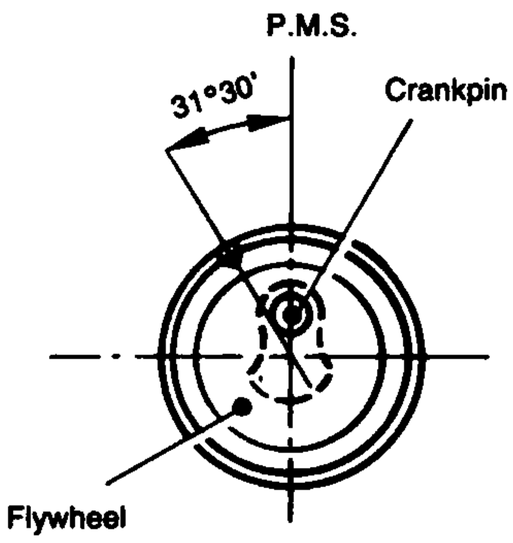

— Start screws (2) and lockwasher (3).

NOTE:
Before applying LOCTITE 270 (green) sealing compound, remove all traces of old Loctite from threads using a suitable brush and compressed air.
Always degrease threads using trichloroethylene or chlorothene.

— Install tool **A.2.0145** to keep flywheel (1) from turning.
— **Lubricate** screws (2) with engine oil and tighten to the specified torque.

(T) : Tightening torque
Flywheel screws
110 to 113 Nm
(11.2 to 11.5 kgm
81.1 to 83.3 ft.lb)

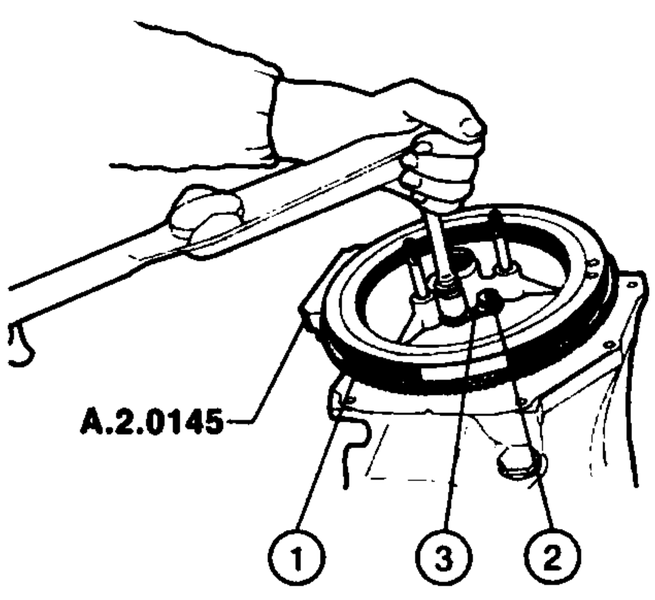

1. Flywheel
2. Screws
3. Lockwasher

k. Install a suitable crankshaft rotating tool on flywheel and remove tool **A.2.0145**.

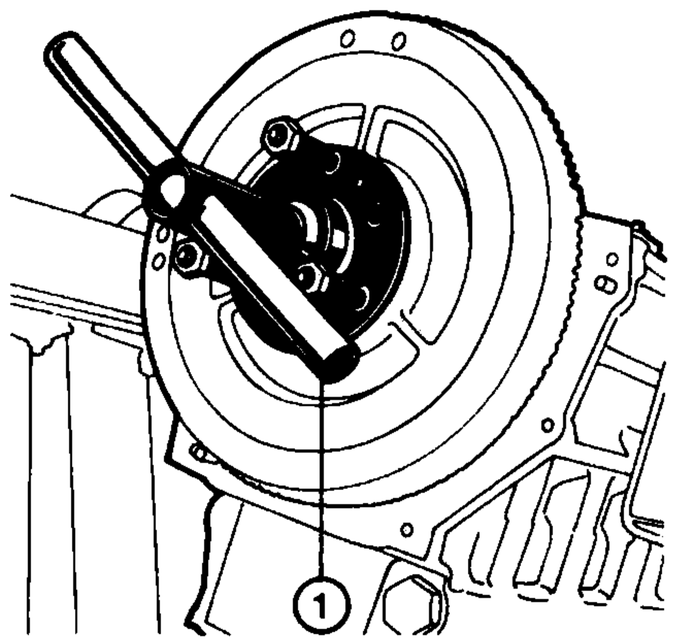

1. Flywheel rotating tool

CYLINDER LINER, PISTON AND CONNECTING ROD INSTALLATION

a. Thoroughly clean cylinder liners (1). Install seal (2) and insert liners in engine block.

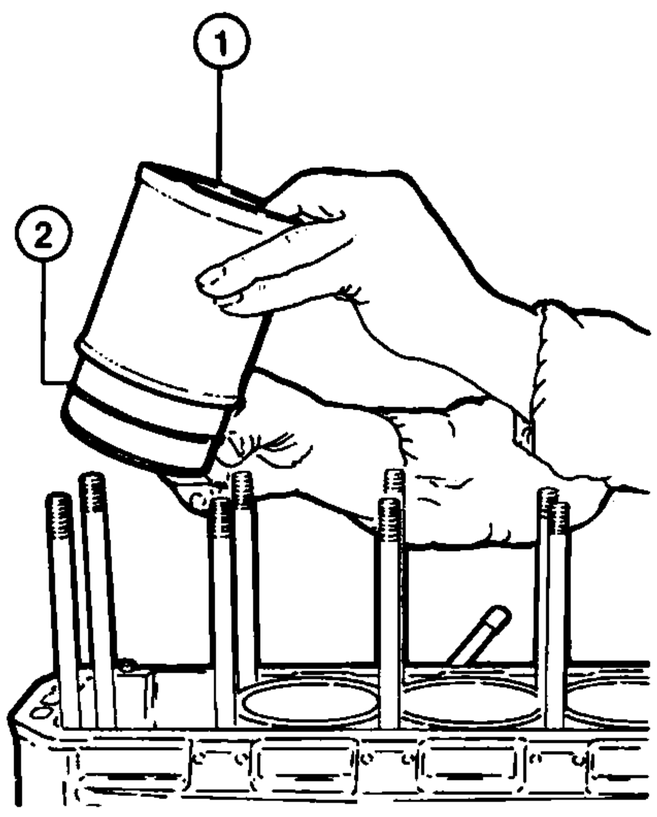

1. Cylinder liner
2. Seal

b. **Piston and connecting rod installation.**
— Install piston rings so that ring ends are staggered as shown below.

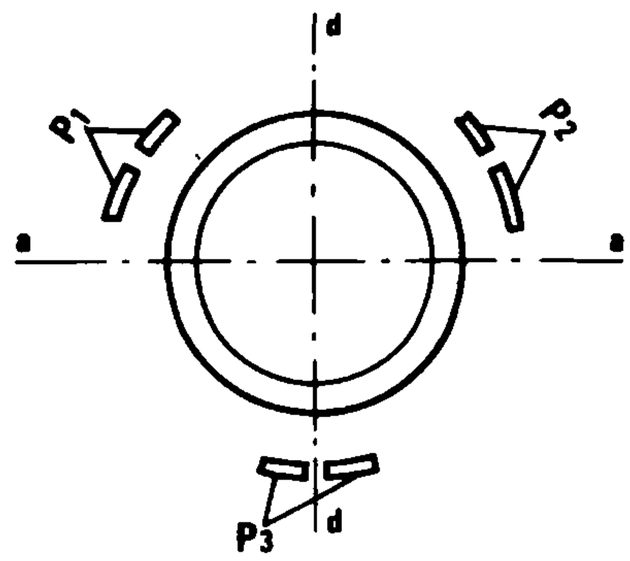

P_1 Top compression ring
P_2 Bottom compression ring
P_3 Oil control ring
aa Piston pin centerline
dd Direction of thrust

— Select bearings of the correct grade and install on connecting rods and caps.
— Insert pistons and connecting rods (1) in the corresponding cylinder liners (2) using a suitable tool.
— Hold down cylinder liners using retainers **A.2.0117**.

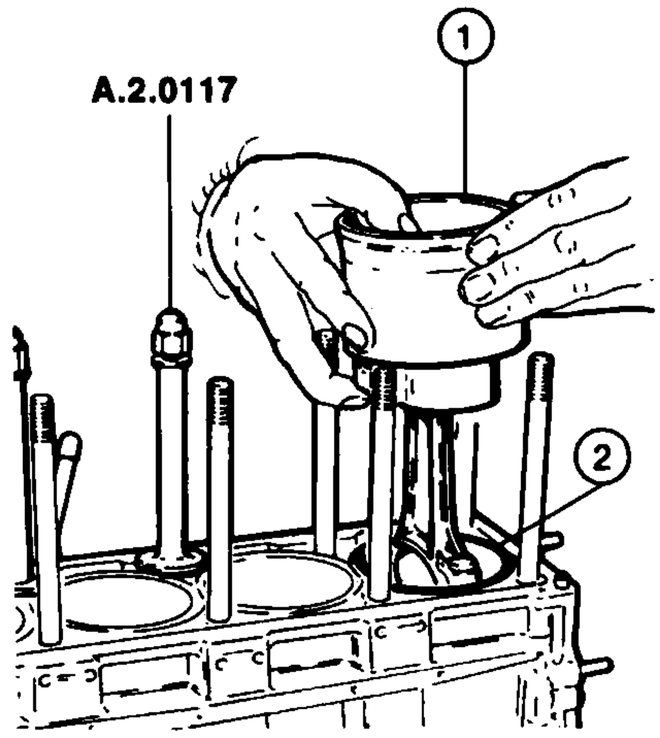

1. Pistons and connecting rods
2. Cylinder liners

NOTE:
- **For 1800 cc and 2000 cc engine, install pistons with the arrow stamped on the piston head pointing toward the exhaust side.**
- **Install connecting rods with the offset facing toward the intermediate main journal.**

— Lubricate connecting rod caps and crankpins with engine oil. Install connecting rod caps complete with bearing inserts on crankpins and tighten nuts to the specified torque.

— On assembly, position connecting rod and main bearing caps so that the bearing lock notch is on the same side (intake or exhaust) as the corresponding notch on connecting rod or main bearing bore.

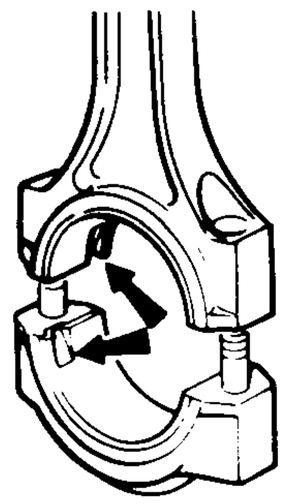

— Turn the crankshaft until nuts retaining connecting rod caps (2) can be reached.
— Before tightening nuts (1), check big end float using a feeler gauge.

Big end float:
0.2 to 0.3 mm (0.008 to 0.012 in)

(T) : **Tightening torque**
Connecting rod cap nuts
49 to 52 Nm
(5 to 5.3 kgm
36.1 to 38.6 ft.lb)

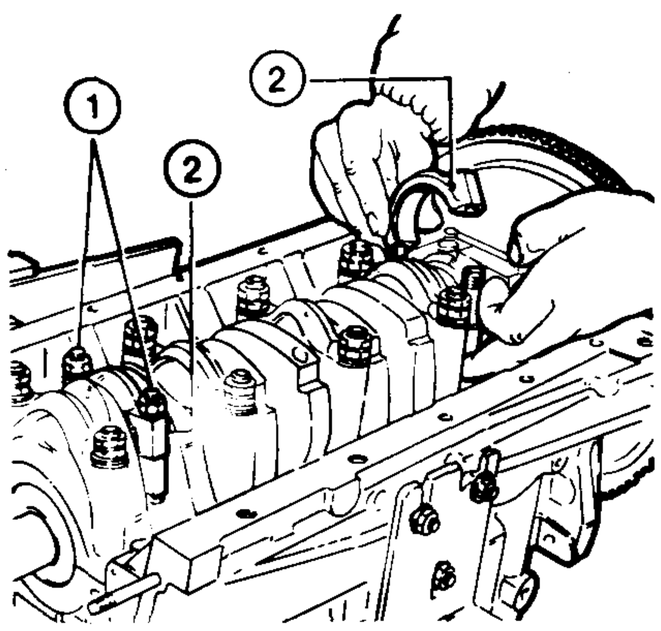

1. Nuts
2. Connecting rod caps

TIMING DRIVE IDLER GEAR INSTALLATION

a. Grease washer (1) and position on gear jackshaft.
b. Install chain (3) on idler gear (2) and crankshaft pinion. Install assembly on engine block.

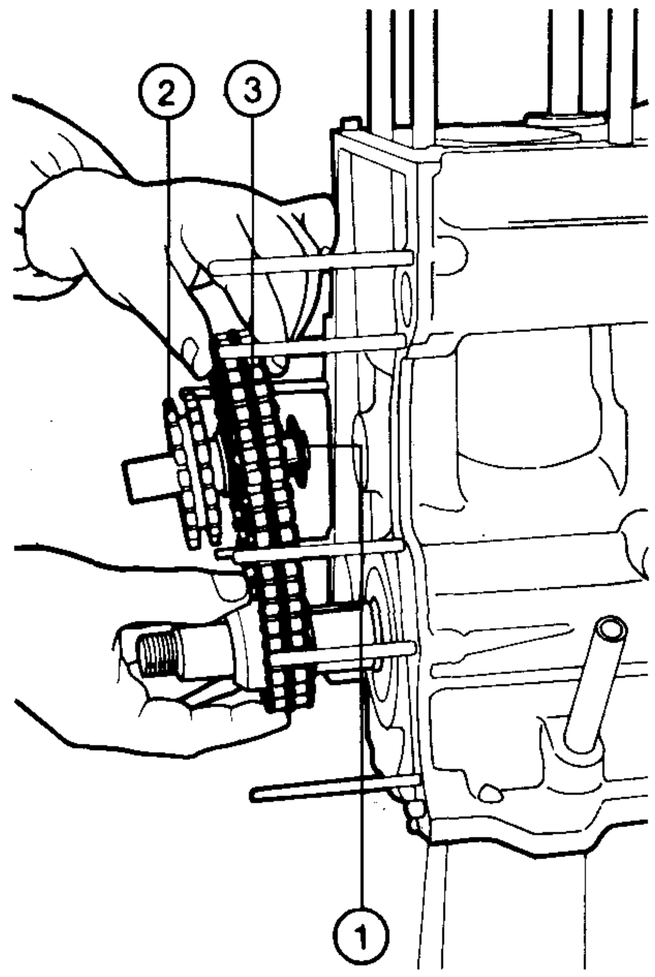

1. Washer
2. Idler gear
3. Chain

c. Install oil pump/distributor drive pinion (1) on crankshaft.

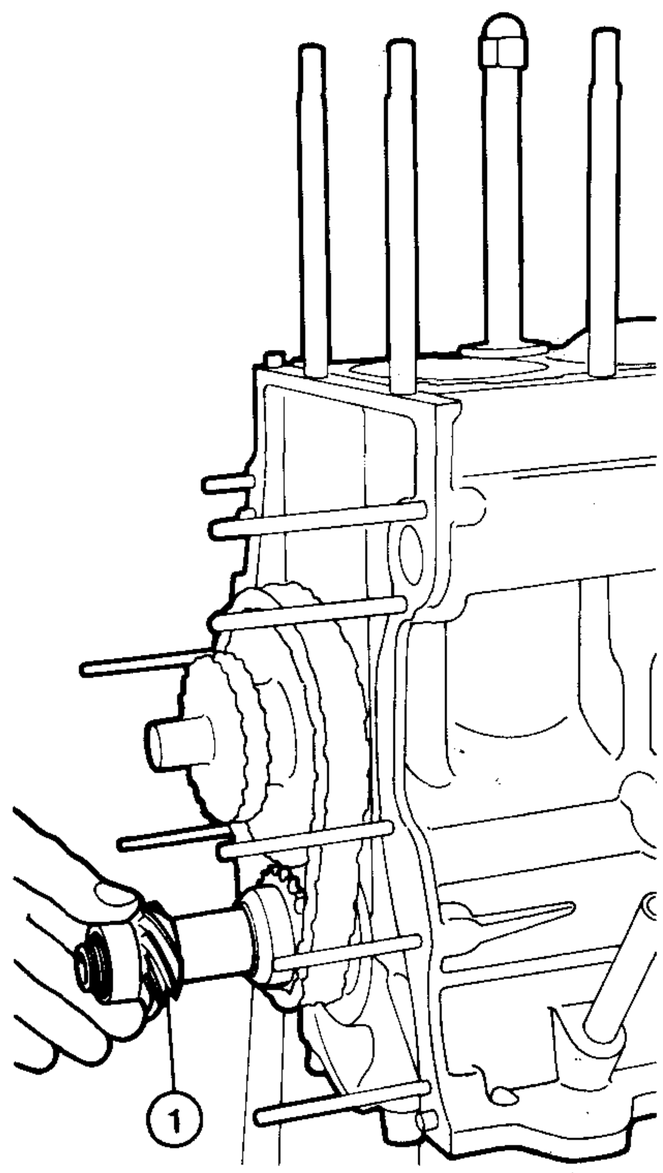

1. Oil pump/distributor drive pinion

FRONT COVER ASSEMBLY

Before installing subassemblies, remove any traces of old gasket from front cover using butyl acetate or methylethylketone.

a. Install water pump (1) together with a new gasket on front cover and tighten nuts and washers (2) to the specified torque.

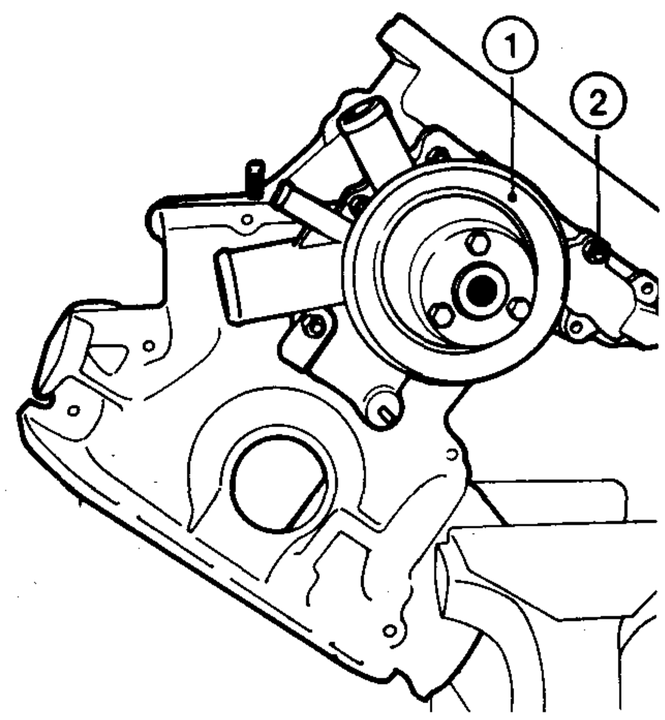

1. Water pump
2. Nuts and washers

(T) : **Tightening torque**
Water pump nuts
14 to 22 Nm
(1.36 to 2.25 kgm
10.3 to 16.2 ft.lb)

b. Fit seal and install oil pump (1) on cover stud. Install distributor (2). Tighten oil pump screws (3) and check that drive shaft turns freely.

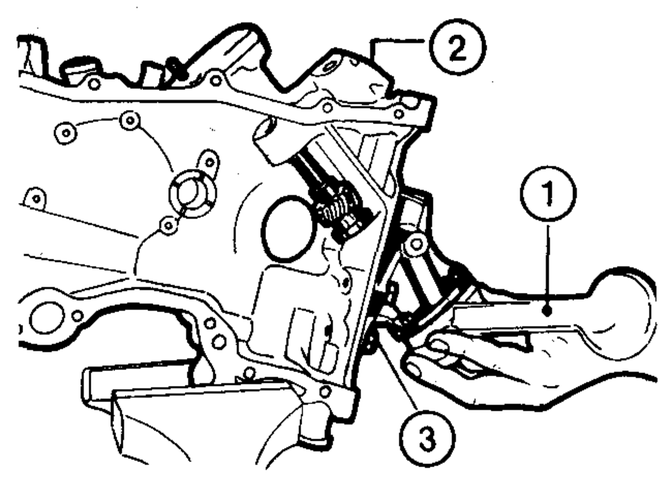

1. Oil pump
2. Front cover
3. Screws and washers

c. Position rubber ring with plate and start nut (1) on cover stud. Install distributor (2)

slot on pump drive shaft should be aligned with tooth on distributor drive shaft.
Tighten nut (1).

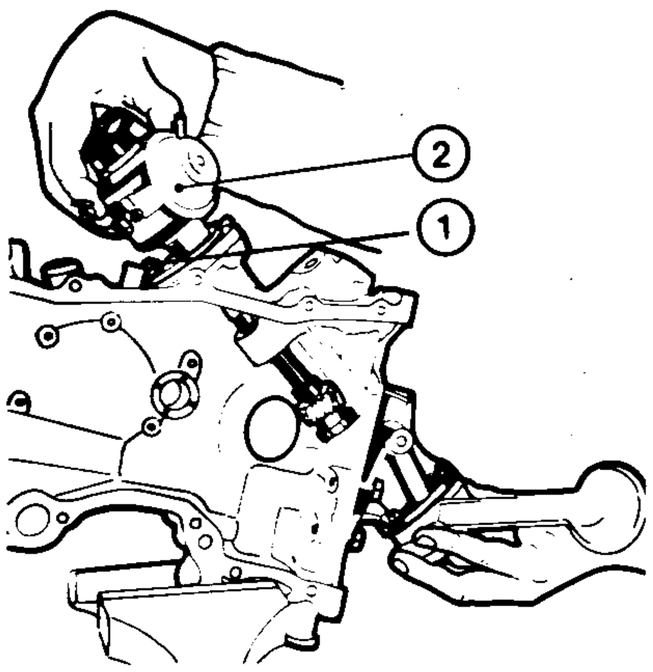

1. **Nut**
2. Distributor

d. Install oil pump/pushrod (1) in associated seat on cover.
Install gaskets (2), spacer (3) and oil pump (4).
Secure parts with associated screws and washers.

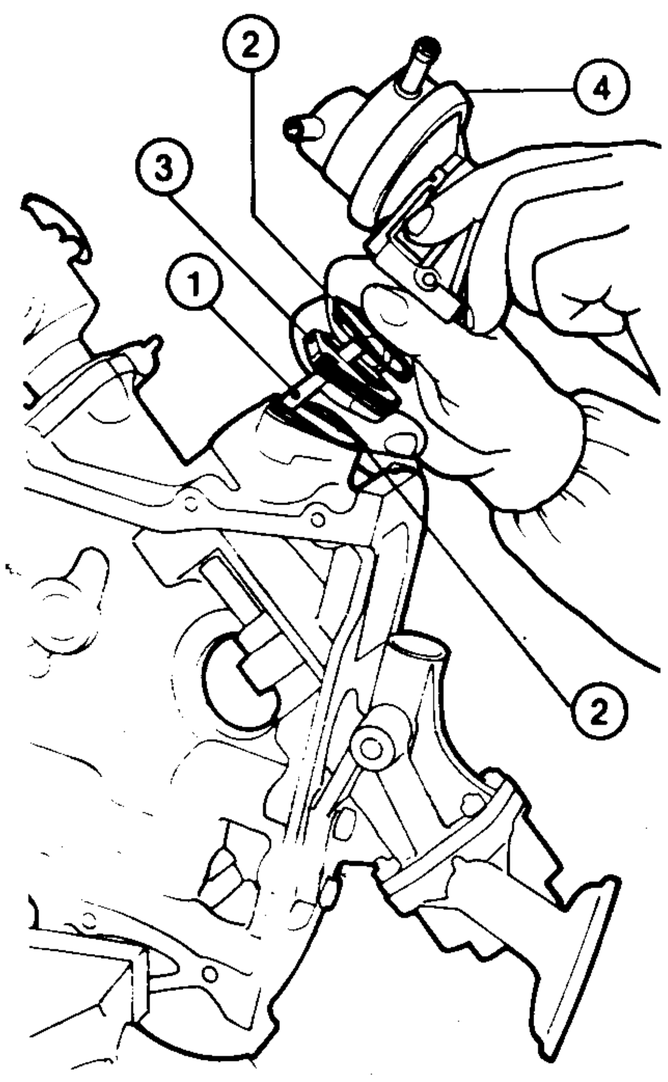

1. Pushrod
2. Gaskets
3. Spacer
4. Oil pump

FRONT COVER INSTALLATION

a. Turn crankshaft until piston No. 1 is at top dead center.
b. Position front cover complete with subassemblies for installation on block.
c. Fit metal oil seal into crankshaft hole on inside of front cover and hold in place with grease. Key way should be approximately aligned with corresponding key way on crankshaft.
d. Install seal (1) on cover and gaskets (2) on block.
e. Fit front cover (3) over engine block studs (4). Do not push cover fully home.
f. Position distributor (5) with cylinder No. 1 timing mark on distributor body facing toward front of engine.

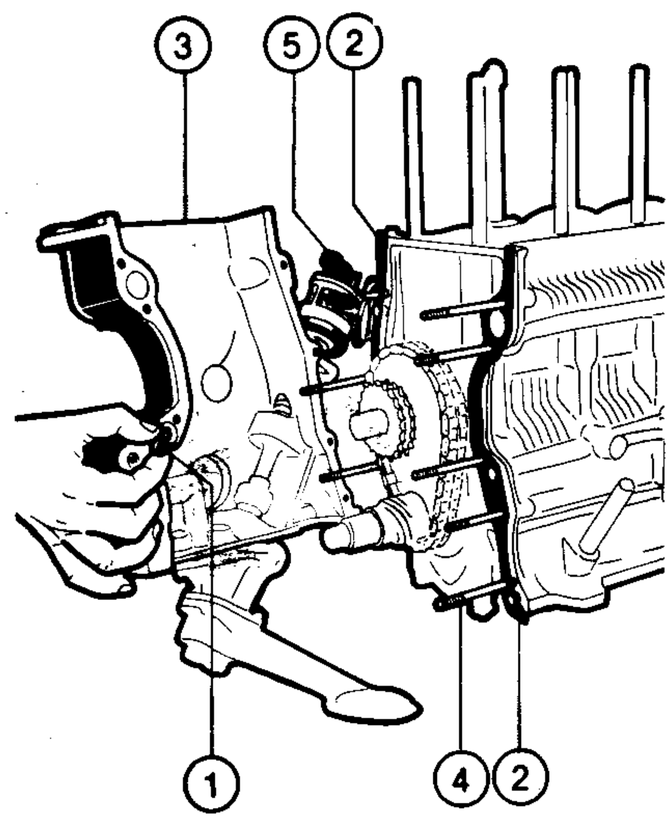

1. Seal
2. Gaskets
3. Front cover
4. Studs
5. Distributor

g. Turn oil pump drive shaft so that when the oil pump/distributor drive pinion is meshed, further rotation will bring the distributor rotor arm to a position facing the front of the engine.
h. Install the front cover fully home on the block and tighten nuts with washers to the specified torque.

(T) : **Tightening torque**
Front cover nuts
14 to 22 Nm
(1.36 to 2.25 kgm
10.3 to 16.2 ft.lb)

i. **Pulley installation.**
— Lubricate seal (1), using engine oil for outer surface and ISECO (Part No. 3671-69841) for the lip.
— Using tool **A.3.0146**, install seal (1) on crankshaft.

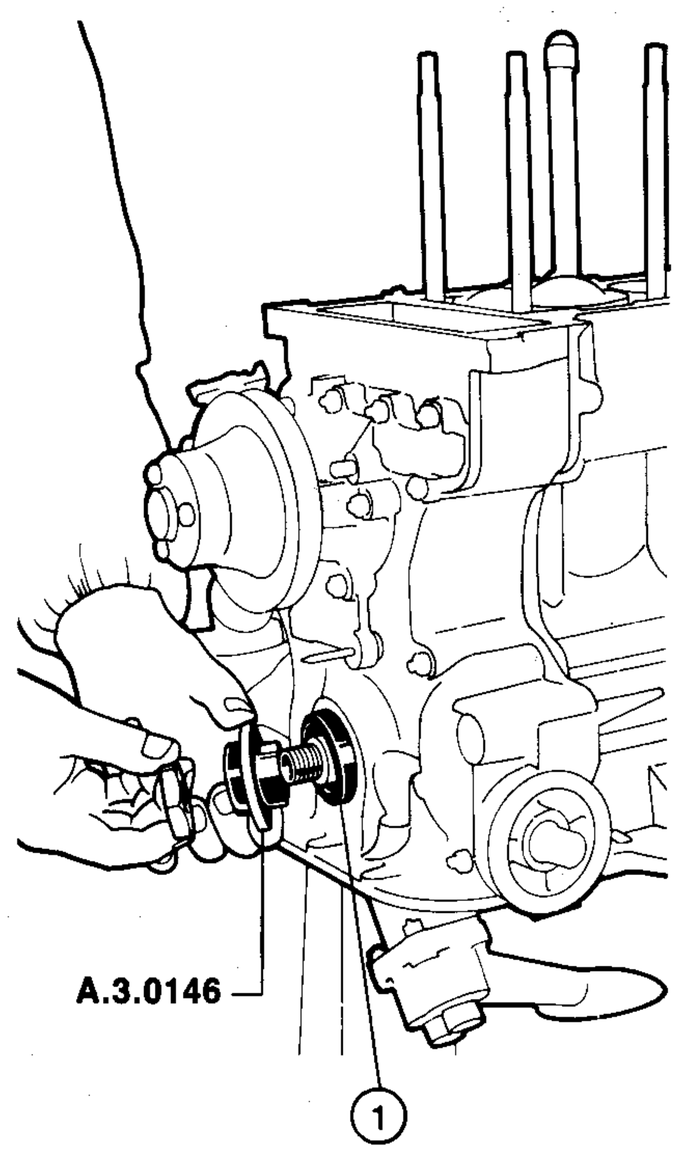

1. Seal

— Block flywheel using tool **A.2.0145**.
— Lubricate pulley bore and install pulley (1) on crankshaft.
— Install lockwasher, lubricate nut with oil and tighten to the specified torque using a suitable tool.
— Bend over lockwasher tab and remove tool **A.2.0145**.

(T) : **Tightening torque**
Pulley nut
187 to 195 Nm
(19 to 20 kgm
138 to 144 ft.lb)

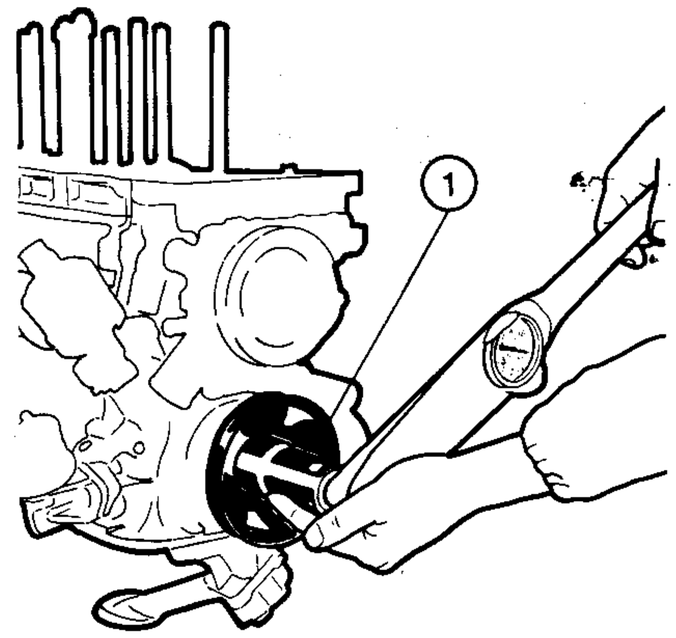

1. Crankshaft pulley

CYLINDER HEAD INSTALLATION

a. Turn the crankshaft to bring piston No. 1 to top dead center at the beginning of its power stroke, i.e., when reference mark on pulley (1) is aligned with pointer (2) on front cover.
In addition, distributor rotor arm (3) must face front of engine.

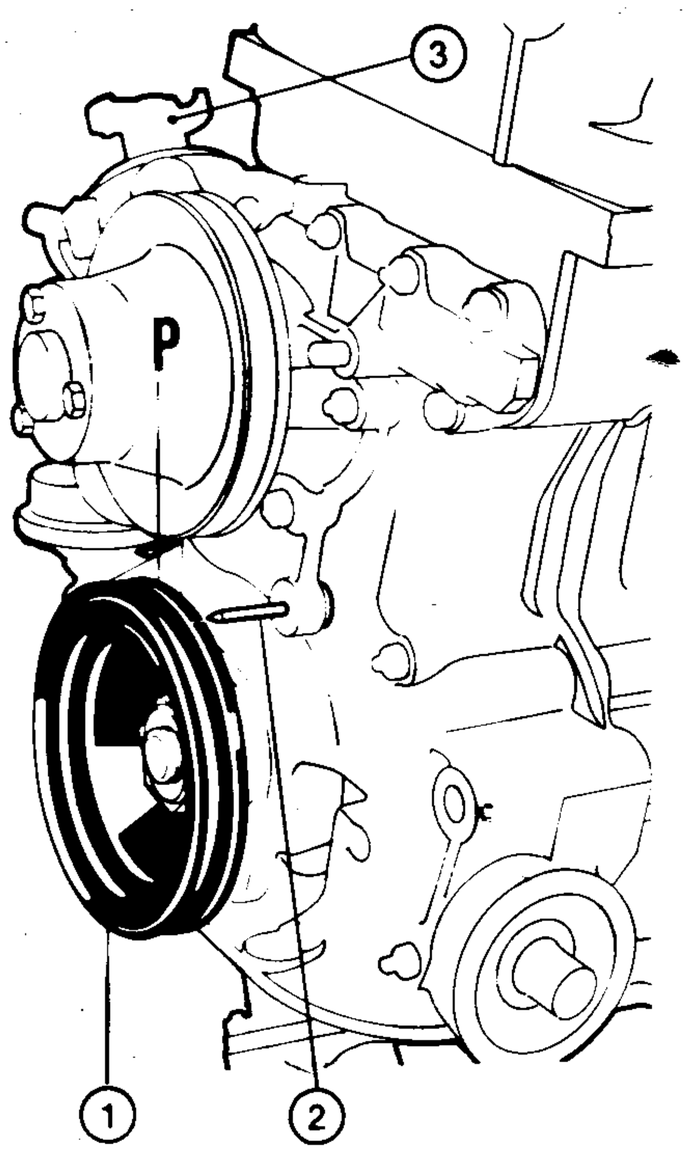

1. Pulley
2. Reference pointer
3. Distributor rotor arm

b. Install camshaft drive chain (1) on idler gear as shown below.

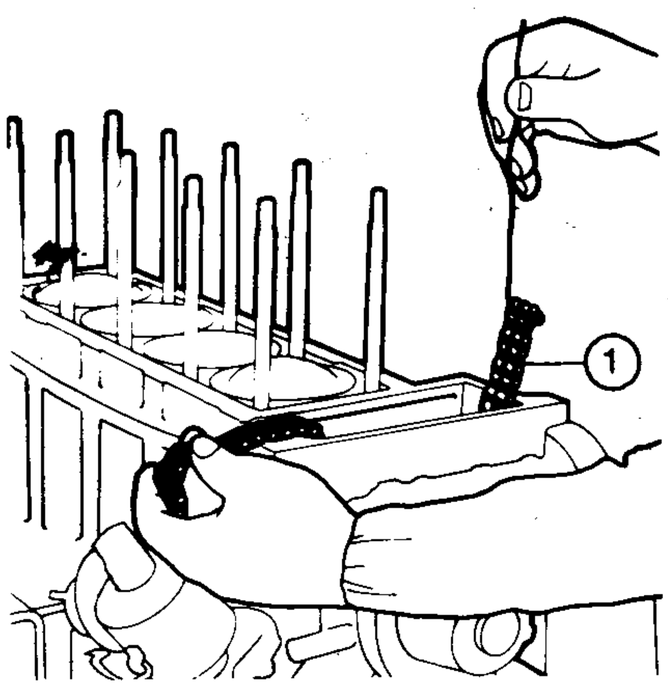

1. Camshaft drive chain

c. Remove cylinder liner retainers, install head gasket (1) and position oil seals (2).

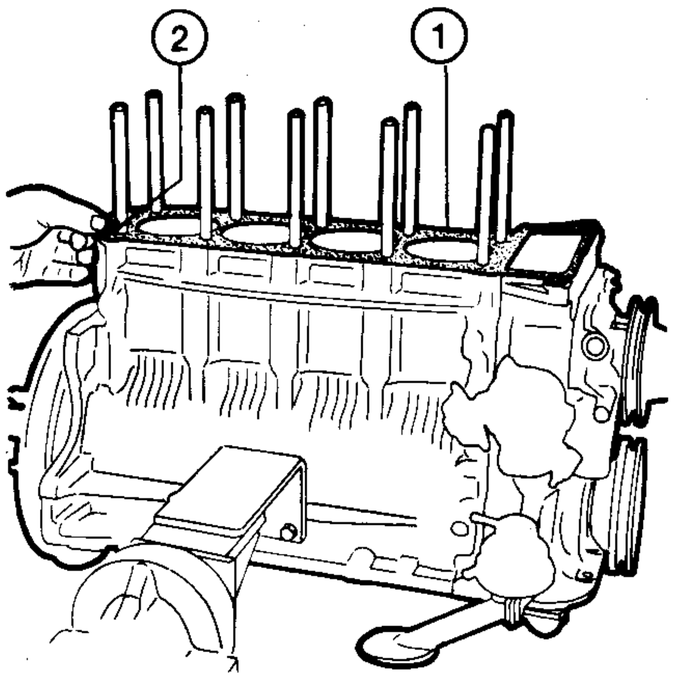

1. Gasket
2. Seals

d. **Cylinder head installation.**

— Using tool **A.5.0103**, turn camshafts (1) so that cylinder No. 1 cams point outward.
With camshafts in this position, align reference marks on camshafts with corresponding marks on caps.

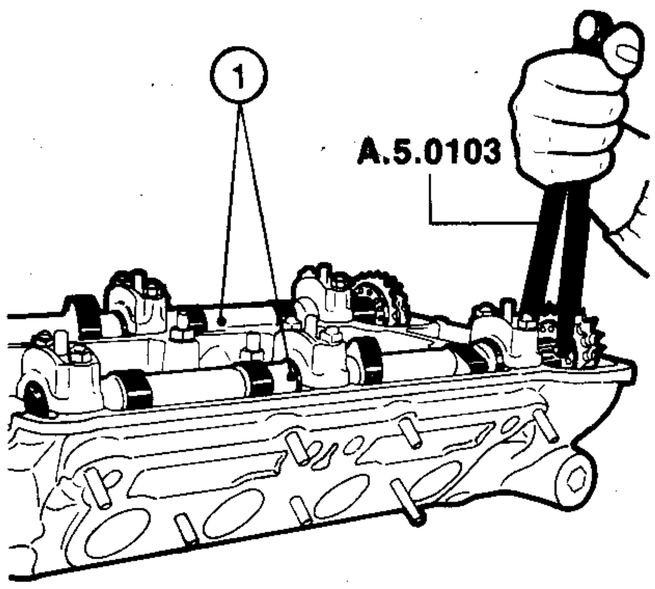

1. Camshafts

— Install cylinder head on block, and lubricate stud threads, washers and nuts with engine oil. Install lifting bracket (11) on center stud.
— Tighten the ten cylinder head nuts in two or three stages following the numerical sequence shown on the following page. Refer to the Inspection Specifications Tightening Torque Table for the correct tightening torques.
— Apply DIRING-Curil sealing compound (Part No. 3522-00017) to threads of screws (12).
Install screws with associated washers and secure cylinders head to block.

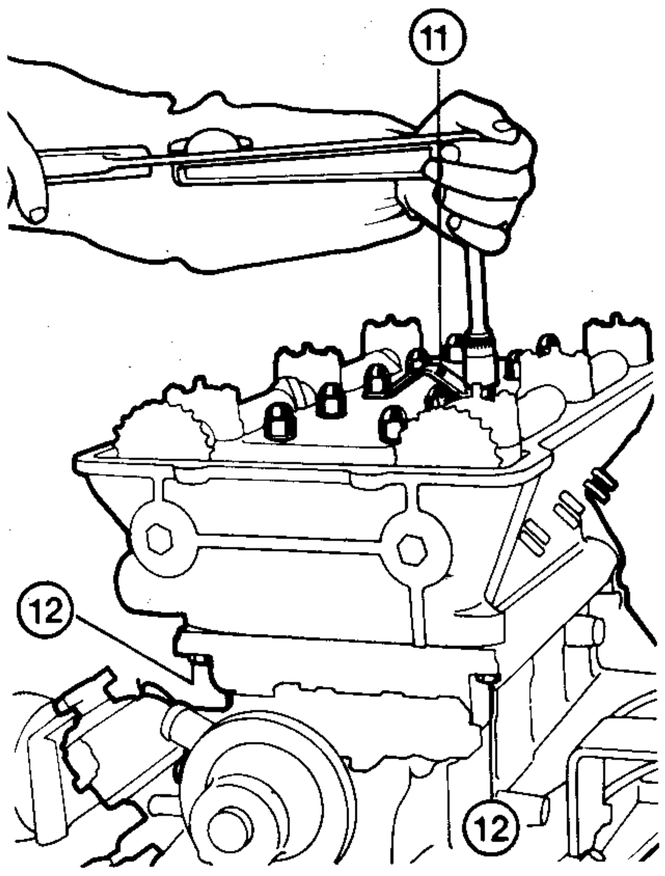

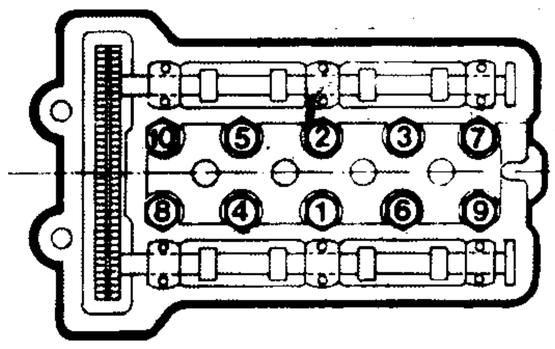

1 through 10. Nuts
11. Lifting bracket
12. Screws

e. Install chain (1) overcamshaft drive gears (2) and chain tensioner gear.
Join chain ends with master link (3).

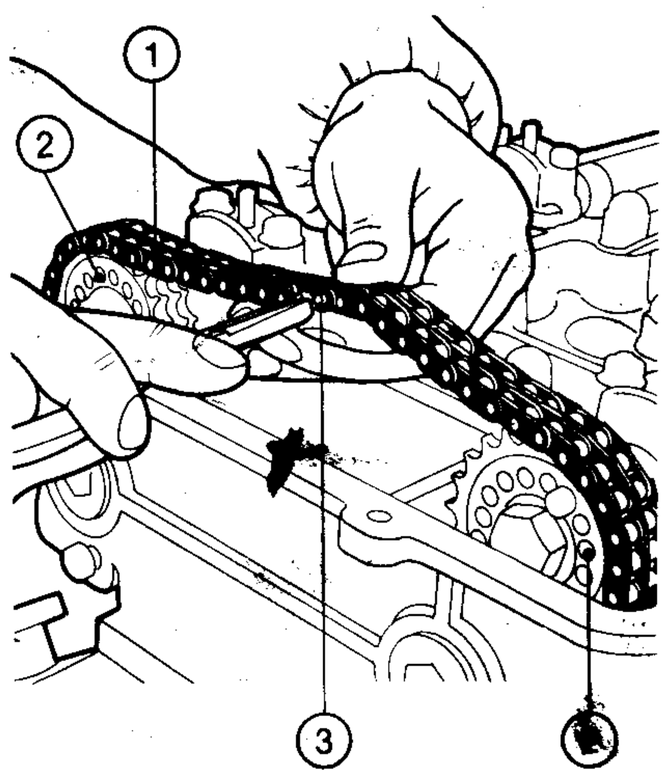

1. Chain
2. Gears
3. Master link

f. Loosen chain tensioner screw. Turn crankshaft slowly in its normal direction of rotation to place chain tensioner under pull. Tighten screw.

g. **Timing check.**

— Turn the crankshaft to bring cylinder No. 1 piston to top dead center at the beginning of its power stroke, i.e. when reference mark «P» on pulley (1) is aligned with pointer (2) on front cover.

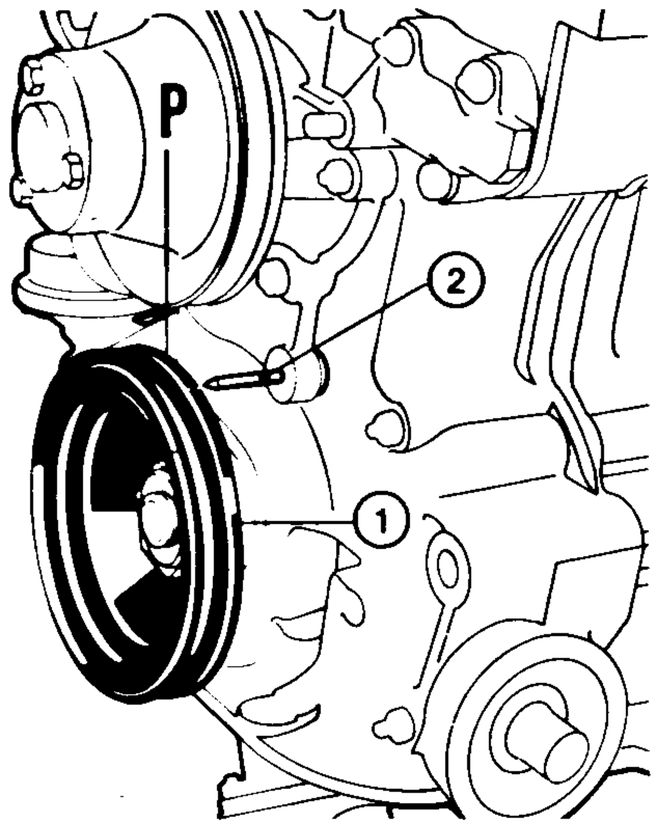

1. Pulley
2. Pointer

— Check that cylinder No. 1 cams (2) of camshafts (1) point outward as shown.

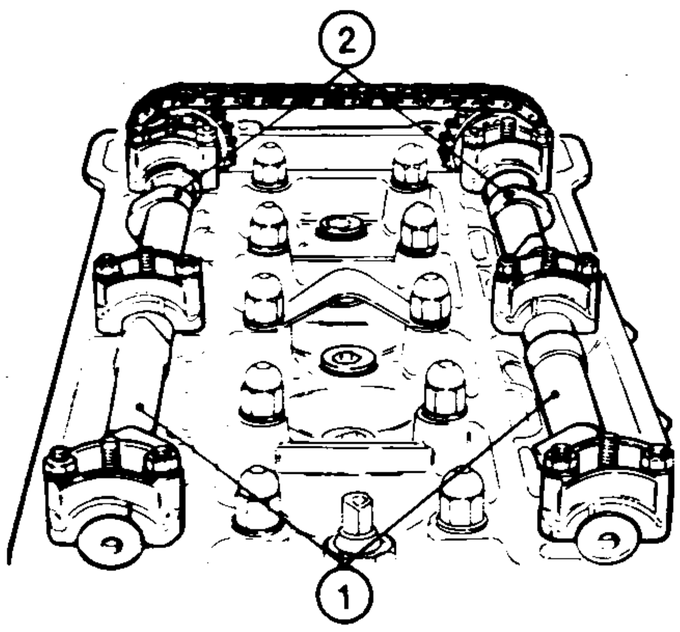

1. Camshaft
2. Cylinder No. 1 cams

— Check that distributor (2) rotor arm (1) faces toward front of engine.

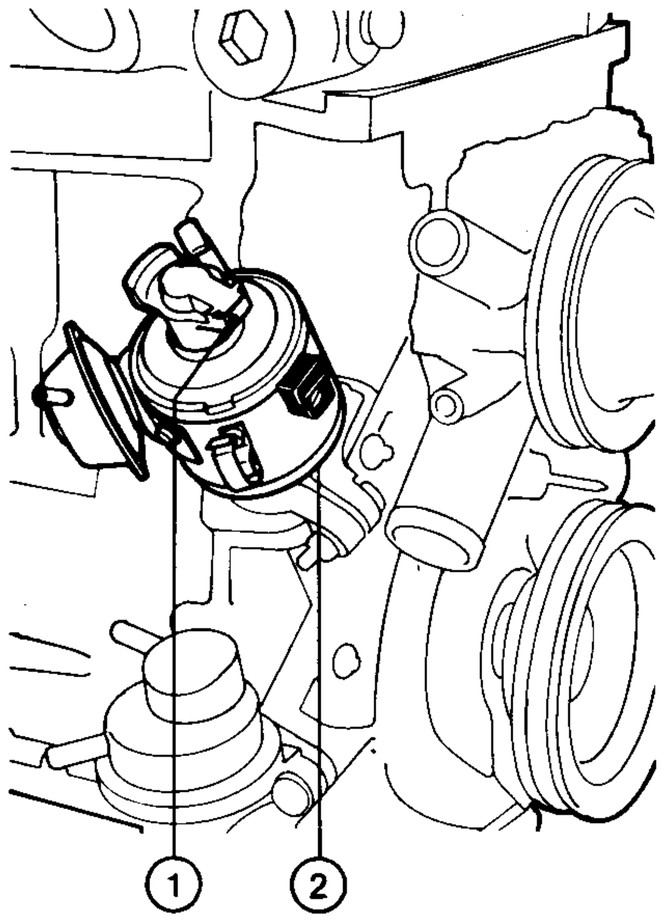

1. Rotor arm
2. Distributor

— To check top dead center more accurately, install a dial indicator with support **C.6.0122** in spark plug seat on cylinder No. 1.
Turn crankshaft until indicator needle stabilizes, i.e. stops turning clockwise or counterclockwise.

— Check that reference marks on camshafts and on caps are aligned.

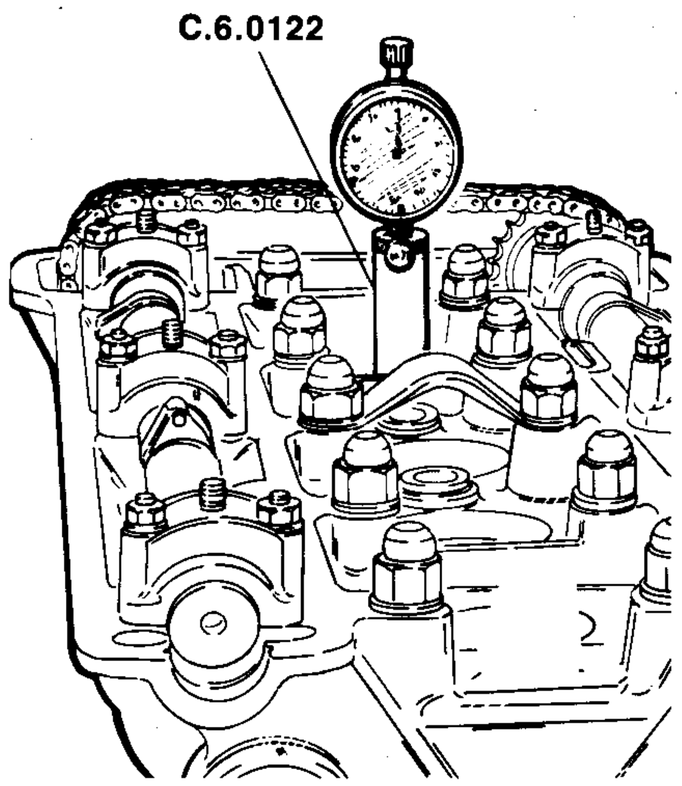

— If reference marks on caps (2) and camshafts (1) are not aligned, proceed as follows:

• Loosen camshaft drive gear nuts and, without moving chain, turn camshafts as necessary using tool **A.5.0102**.

• Tighten nuts and turn crankshaft through one or two revolutions.

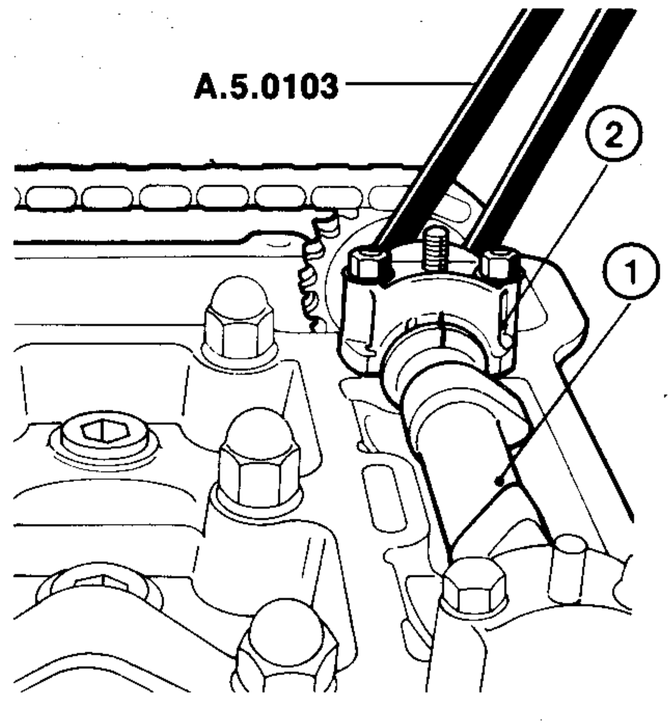

1. Camshaft
2. Cap

• Check that cylinder No. 1 piston is at top dead center at the beginning of its power stroke.

• Check that reference marks on camshafts (1) and caps (2) are aligned.

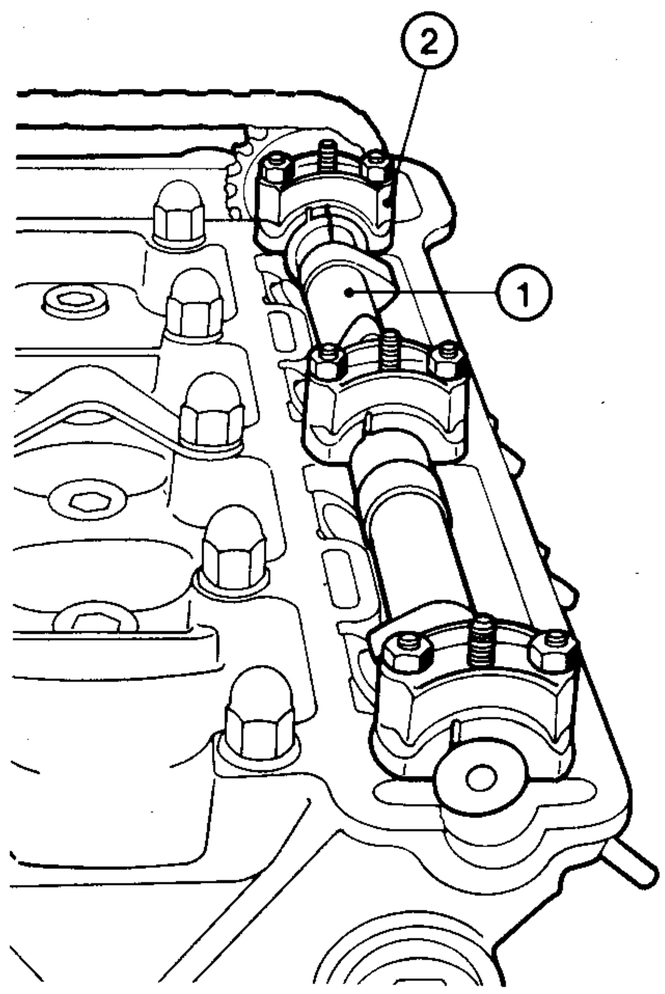

1. Camshaft
2. Cap

• Insert bolts in the aligned holes on gears and flanges.
Finger tighten bolts.

• Tighten camshaft drive gear nuts and bend lockwasher tabs.

• Tighten nuts securing gears and flanges.

h. Install oil pressure sending unit on engine block.

i. Install oil filter and tighten by hand. Insert dipstick.

j. Lubricate spark plug threads with ISECO-Molykote A oil (Part No. 4500-18304). Install spark plugs (1) and high coolant temperature sending unit (2). Tighten to the specified torque using a suitable wrench.

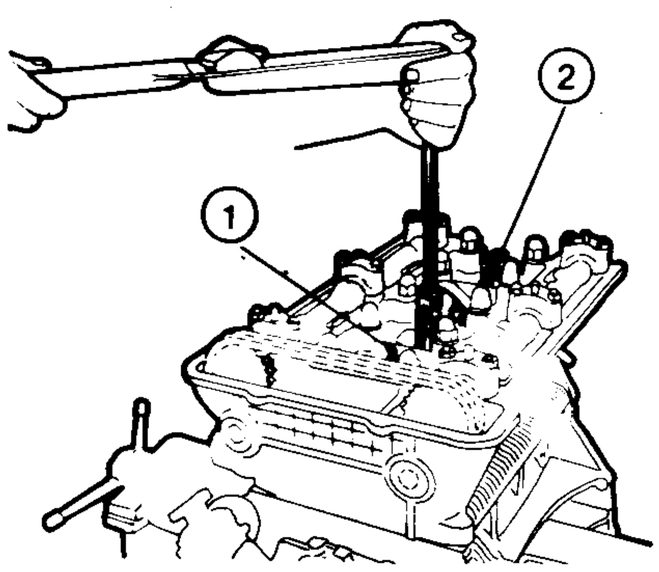

1. Spark plugs
2. High coolant temperature sending unit

(T) : **Tightening torque**
Spark plugs
25 to 34 Nm
(2.5 to 3.5 kgm
18.4 to 25.1 ft.lb)

(T) : **Tightening torque**
High coolant temperature sending unit
20 to 25 Nm
(2 to 2.5 kgm
14.8 to 18.4 ft.lb)

OIL PAN INSTALLATION

a. Apply DIRING-Heldite sealing compound (Part No. 3522-00015) evenly to gasket.
b. Remove all traces of old sealing compound and degrease pan and block contact surfaces.
c. Install oil pan (1) with gasket (2) and tighten bolts.

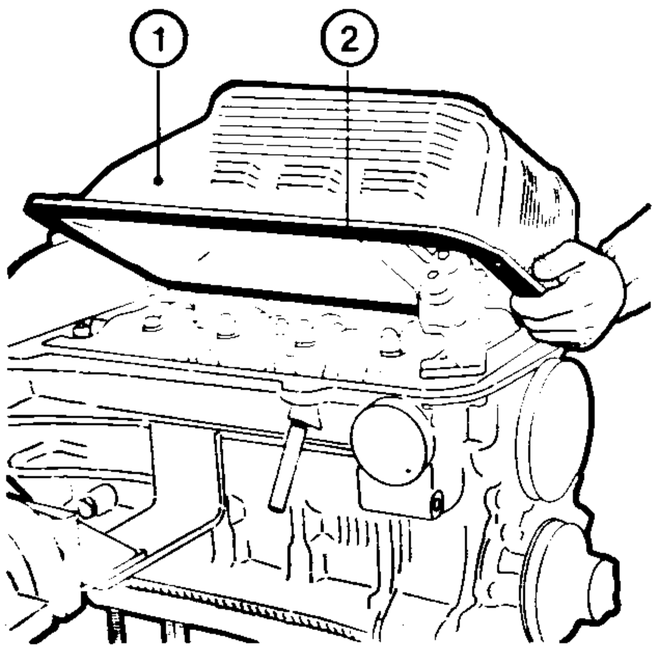

1. Oil pan
2. Gasket

CAMSHAFT COVER INSTALLATION

a. Install the two rubber oil seals on the cylinder head. Fill camshaft bearing well with oil.

Oil supply in cylinder head wells:
0.415 kg (0.91 lb) per well

b. Remove any traces of old gasket from camshaft cover (1) using butyl acetate or methylethylketone. Secure new gasket to camshaft cover using DIRING-Heldite sealing compound.
c. Install cover (1) on cylinder head. Install knobs (2) and front bolts (3) and tighten to specified torque.

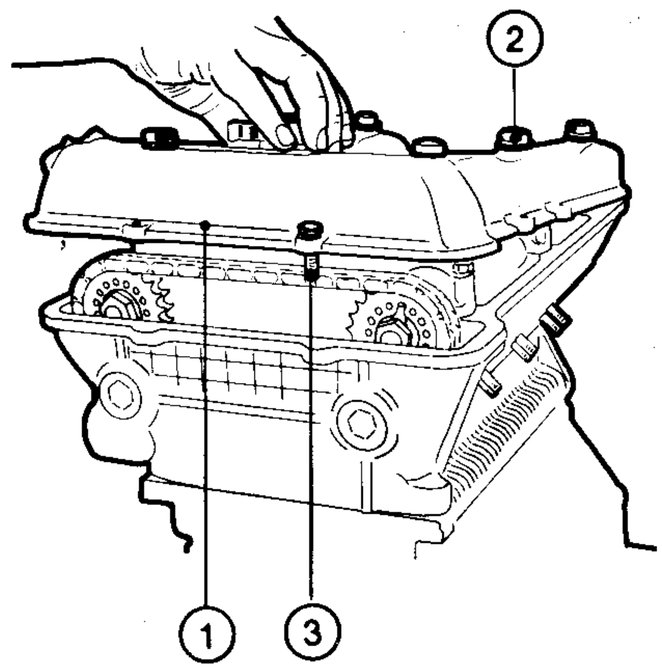

1. Camshaft cover
2. Knobs
3. Front bolts

(T) : **Tightening torque**
Camshaft cover knobs
14 to 20 Nm
(1.4 to 2 kgm
10.3 to 14.8 ft.lb)

INTAKE MANIFOLD/ COLLECTOR BOX ASSEMBLY

a. Follow the disassembly procedure in reverse order and note the points below.

(T) : **Tightening torque**
Thermostat cover screws
10 to 16 Nm
(1 to 1.6 kgm
7.4 to 11.8 ft.lb)
Coolant temperature sending unit on intake manifold
34 to 39 Nm
(3.5 to 4 kgm
25.1 to 28.8 ft.lb)

b. Apply **DIRING-Heldite or DOW CORNING Hermetite** sealing compound **(Part No. 3522-00015)** to gaskets between carburetter cushion pads and intake manifold.

ENGINE AUXILIARIES INSTALLATION

a. **Alternator and V-belt installation.**
— Position alternator (1) with bracket (2) on front cover.
— Install bolt (3) and slide bracket (2) over stud (4). Start nuts.
— Install V-belt over drive pulleys.

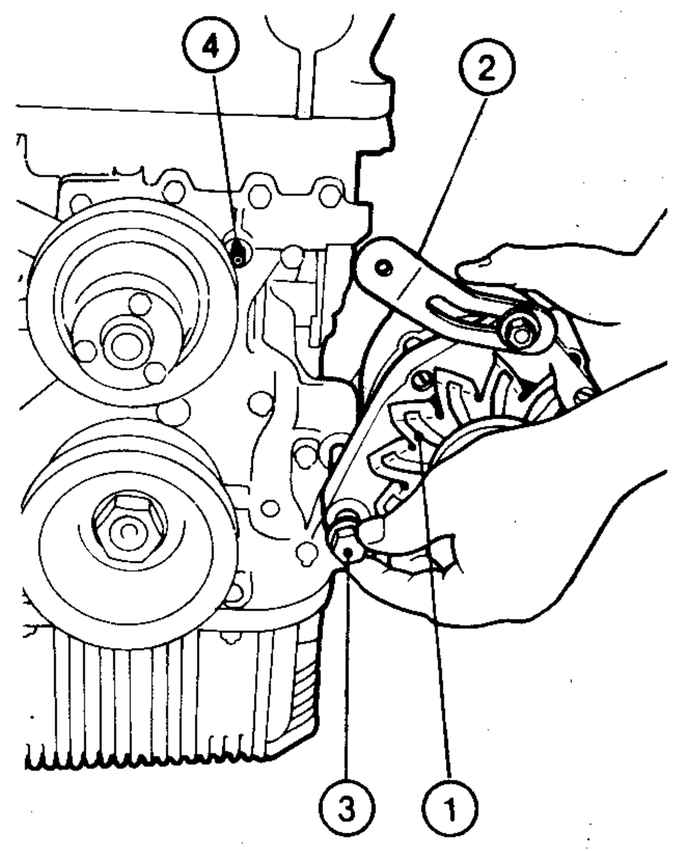

1. Alternator
2. Bracket
3. Bolt
4. Stud

— Adjust belt tension by swinging alternator outward as necessary. Bolt tension is correct when belt deflects 15 mm under a 79 N (8 kg; 17.8 lb) load applied on longer leg.
— Tighten nut (1) and repeat belt tension check. Tighten nut (2) and bolt with locknut (3).

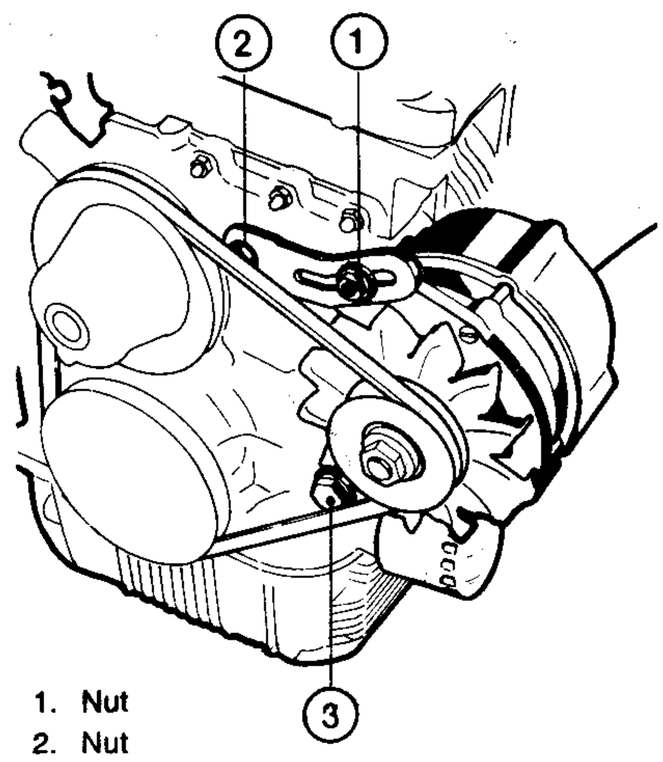

1. Nut
2. Nut
3. Bolt

b. **Manifold/collector box/carburetter assy installation.**

— Position gasket (1) on cylinder head. Install intake manifold over studs (2) and secure through nuts and washers.

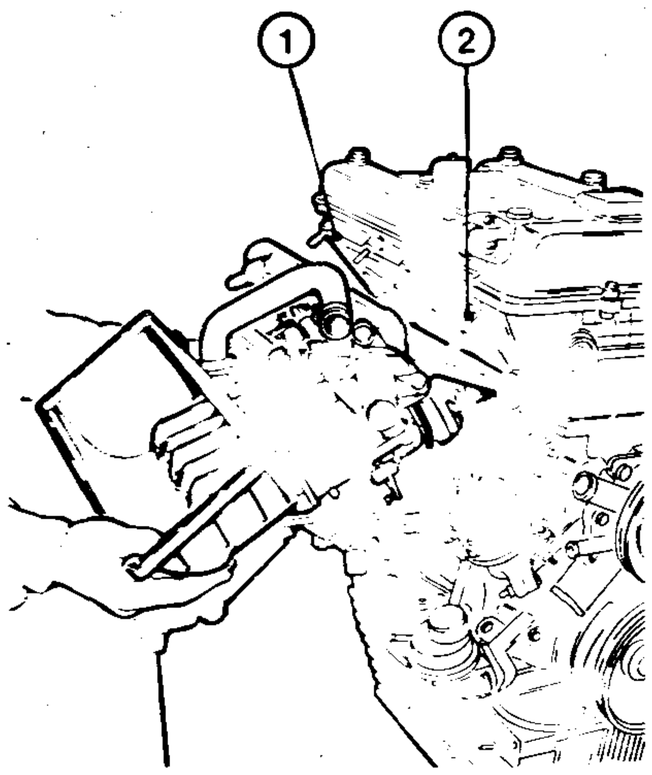

1. Gasket
2. Studs

— Install by-pass hose (3) to thermostat and to water pump fitting (4). Tighten hose clip screws.

— Connect the following lines:
- Vacuum line (5) between carburetter and distributor advance device.
- Crankcase vapour line (6) and vapour recirculation line (7) between carburetters and camshaft cover fitting.

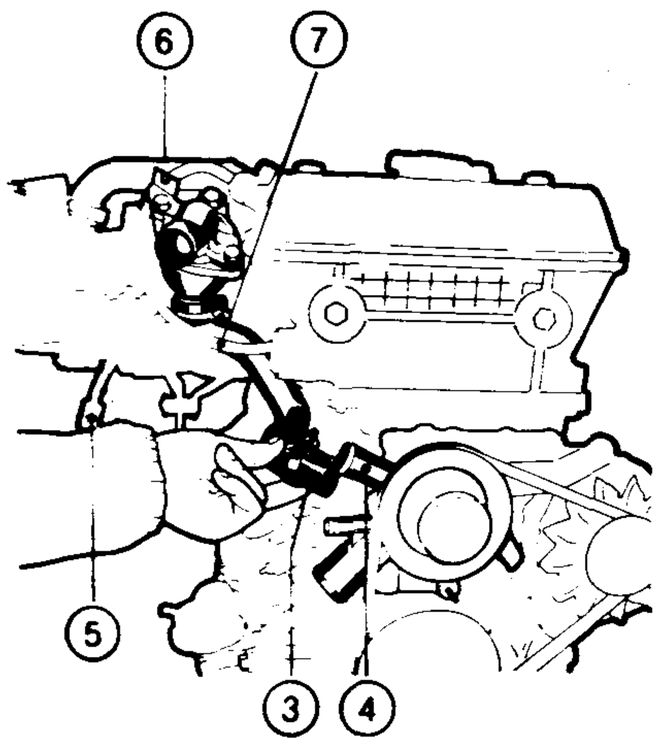

3. Coolant by-pass hose
4. Water pump fitting
5. Vacuum advance line
6. Crankcase vapour line
7. Vapour recirculation line

c. Remove crankshaft rotating tool from flywheel.

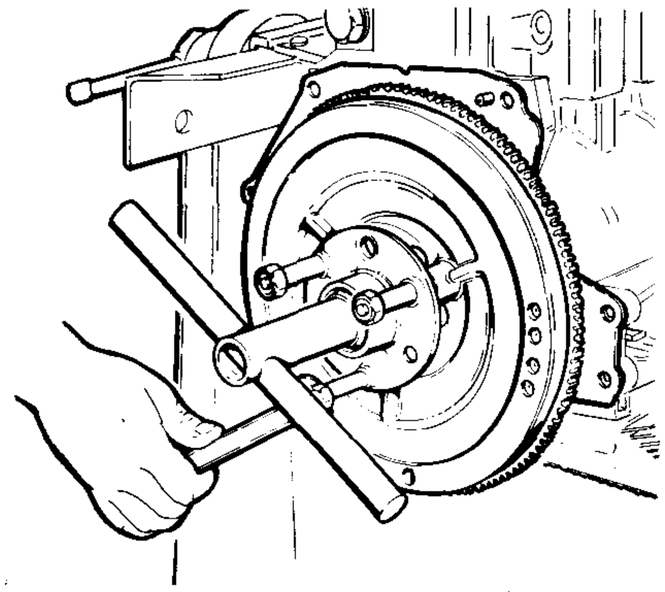

d. Install exhaust manifolds (1) with associated gaskets on cylinder head and secure through nuts and washers (2).

e. Install hot air intake (3) over studs on exhaust manifolds and align holes on hot air intake with holes on camshaft cover. Secure to studs through nuts and washers (4) and to cover through bolts (5).

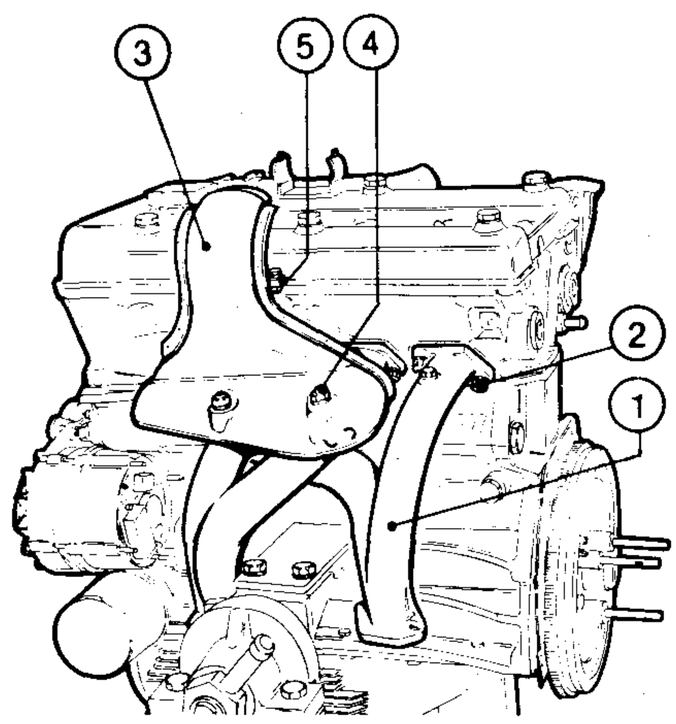

1. Exhaust manifolds
2. Nuts and washers
3. Hot air intake
4. Nuts and washers
5. Bolts

f. Attach a suitable hydraulic lift to engine lifting bracket. Take up cable slack and remove bolts (1) connecting brackets (2) and (3) on engine overhaul stand. Position engine on bench, supporting with hydraulic lift.

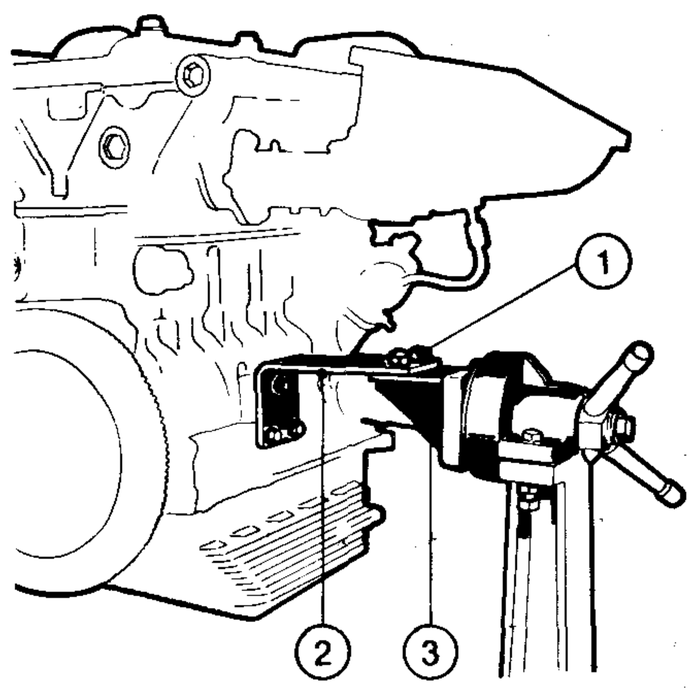

1. Bolts
2. Bracket
3. Bracket

g. Remove brackets from engine block and install R.H. and L.H. engine mounts (1). Tighten nuts and washers (2) to block studs.

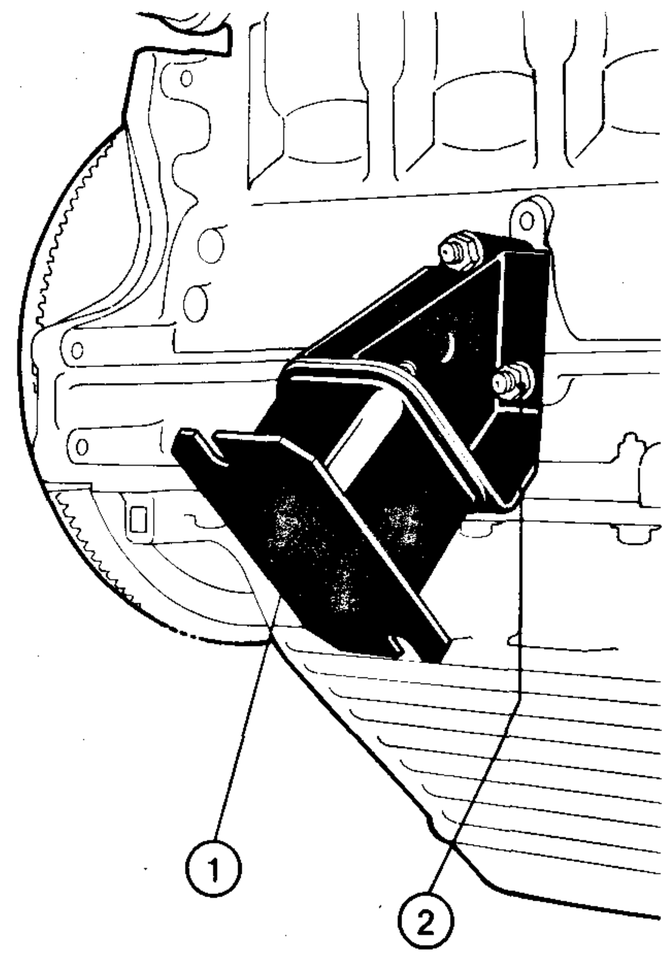

1. Engine mount
2. Nuts and washers

h. Install rear cover (1) and secure through screws with washers (2) and bolts (3).

i. Position shim and starter (4) on rear engine cover. Tighten nuts with washers (5).

j. Install carburetter support (6) to air cleaner casing using two screws. Secure support to engine mount through bolt (7).

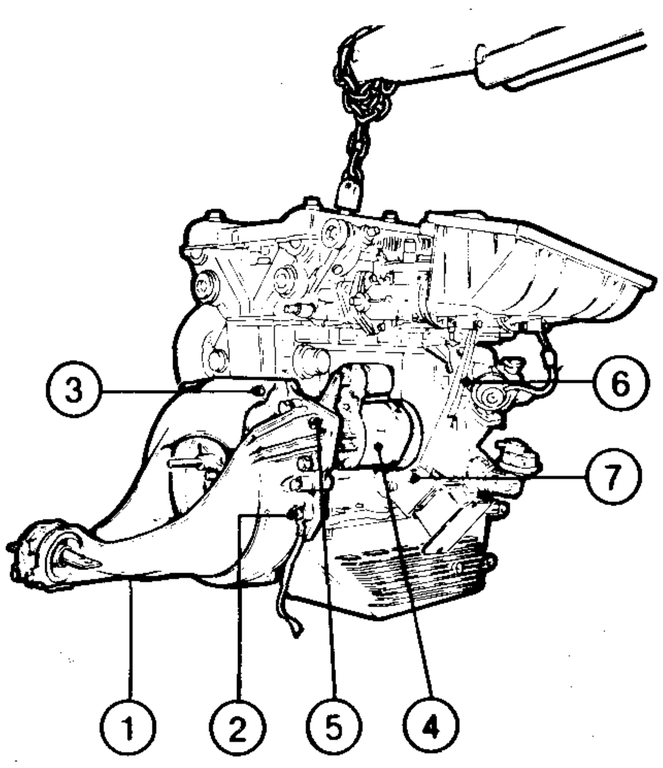

1. Rear cover
2. Screws and washers
3. Bolt
4. Starter
5. Nuts and washers
6. Carburetter support
7. Bolt

REAR COVER RUBBER BUSHING REPLACEMENT

To replace rubber bushing on rear cover, proceed as follows:

a. Position base (1) of remover/replacer tool as shown.

b. Remove rubber bushing tool driver (2).

c. Install new bushing using the same tools.

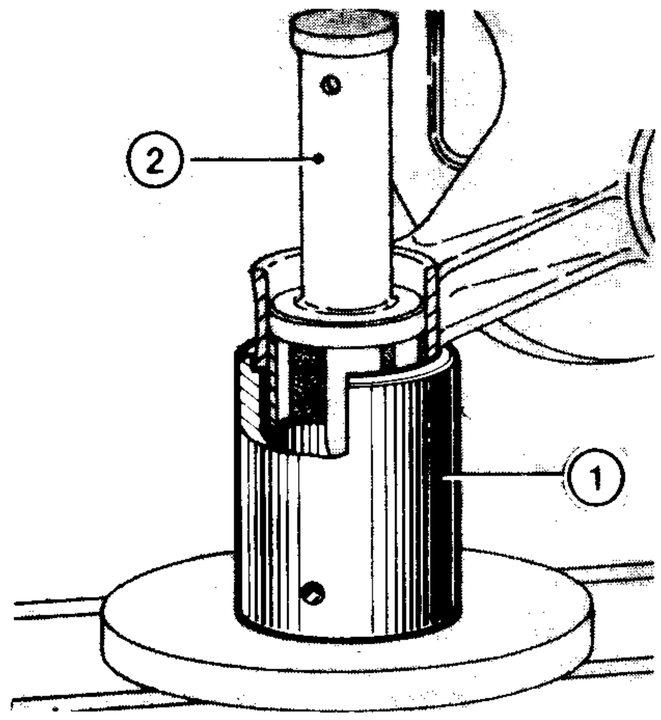

1. Base
2. Driver

NOTE:
Rubber bushing (1) should be parallel to side of chamfer in rear cover seat as shown.

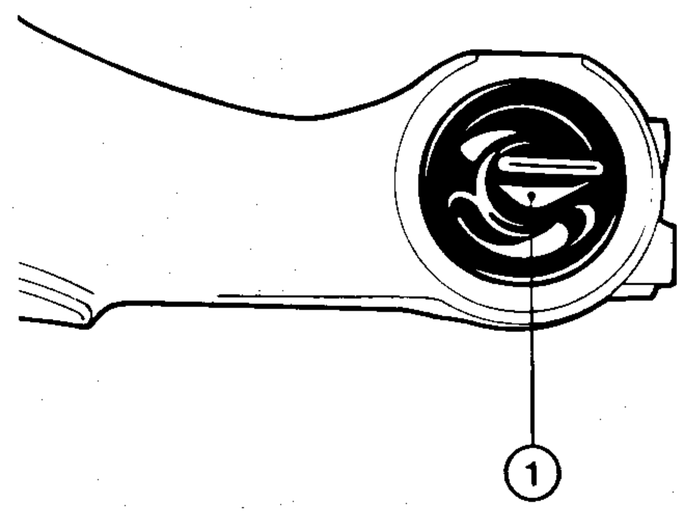

1. Rubber bushing

LUBRICATION SYSTEM

LUBRICATION SYSTEM DESCRIPTION

1.6 1.8 2.0

2.0 iniezione (017.13)

The force feed and splash lubrication system employs a gear type pump.

The oil pump is mounted on the front engine cover and is mechanically driven from the crankshaft, where a pinion meshes with the pump drive shaft.

Oil pressure is controlled by a pressure relief valve mounted on the pump. The full-flow filtration system includes a wire mesh filter on pump suction and a cartridge filter on delivery. The latter is provided with a by-pass valve to direct oil around the filter if the filter becomes clogged.

The oil filler cap is located on the camshaft cover, and is provided with oil vapour recirculation fittings to control emissions at idling speed and full load. Driver is warned of low engine oil pressure by a dash-mounted indicator light connected to a sending unit in the main oil gallery.

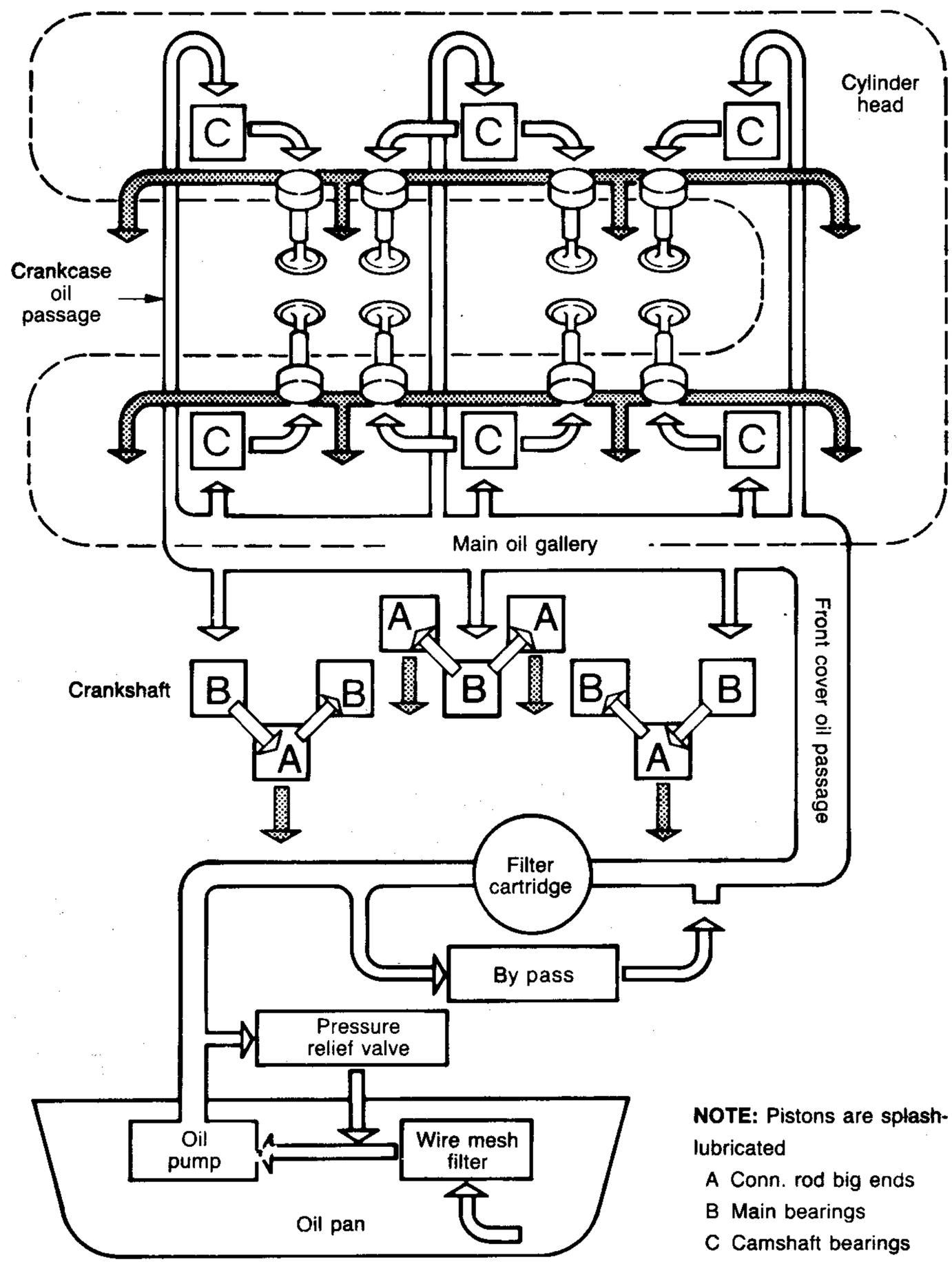

NOTE: Pistons are splash-lubricated

A Conn. rod big ends
B Main bearings
C Camshaft bearings

LUBRICATION SYSTEM DESCRIPTION

1.8 turbo

The force feed lubrication system employs a gear-type pump.
Pump (1) is mounted on the engine front cover and is driven through a shaft, which is driven by means of a gear on the crankshaft.
Oil is taken from the pan through the pump, it is filter through wire mesh filter (2) when sucked and then it is pressure-sent to oil filter (3) through a line. Oil filter (3) is provided with a full-flow cartridge and with a safety by-pass valve (12) for cartridge-clogging cases.
Maximum lubrication pressure is controlled by means of a relief valve in the pump.
After being filtered, oil passes into main lubrication ducts (4) and (5), which are situated longitudinally in the engine block.
Through three secondary ducts (6) oil passes from duct (5) to main journal supports (7) and connecting rod supports (8).
Moreover, from ducts (4) and (5) oil passes into six vertical ducts (9), placed in the engine block and cylinder head; they account for the lubrication of camshaft support (10). Flowing out of the latter, oil lubricates tappets and cups and then it flows back into the pan through two recovery ducts (11), placed longitudinally in the cylinder head.
Furthermore, from main duct (4) oil passes to the turbocharger (through external duct (13)) to lubricate the driving shaft, then oil flows back into the pan through return duct (14).
Oil filter support (15) is provided with a thermal-control valve (16) accounting for oil delivery to heat exchanger (17) depending on oil temperature. The filter support is also provided with an overpressure valve (18): it is meant to by-pass oil directly into the filter if the heat exchanger is clogged (see **A**, **B** and **C**).

A CONDITION:
— THERMAL-CONTROL VALVE CLOSED [OIL TEMPERATURE LOWER THAN 80 TO 82°C (176 TO 180°F)]

When temperature is lower than 80 to 82°C (176 to 180°F), thermal-control valve (16) is closed and oil passes directly from the pump into the filter.

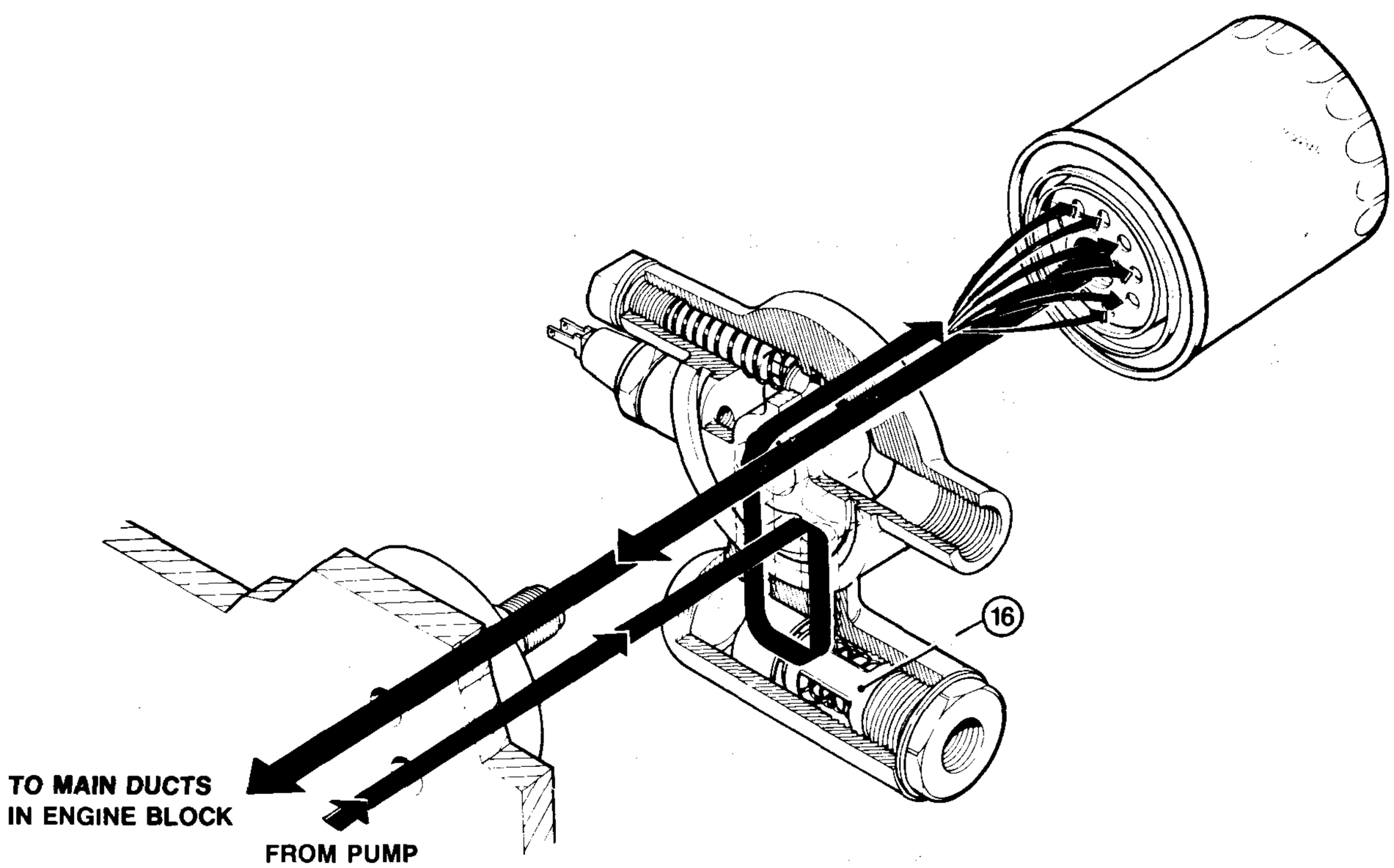

B CONDITION:

— THERMAL-CONTROL VALVE OPEN [OIL TEMPERATURE HIGHER THAN 80 TO 82°C (176 to 180°F)]

When temperature is higher than 80 to 82°C (176 to 180°F), thermal-control valve (16) is open, and oil, which comes from the pump, can pass through the heat exchanger before being sent to the filter; in this way temperature is decreased and better lubrication is assured.

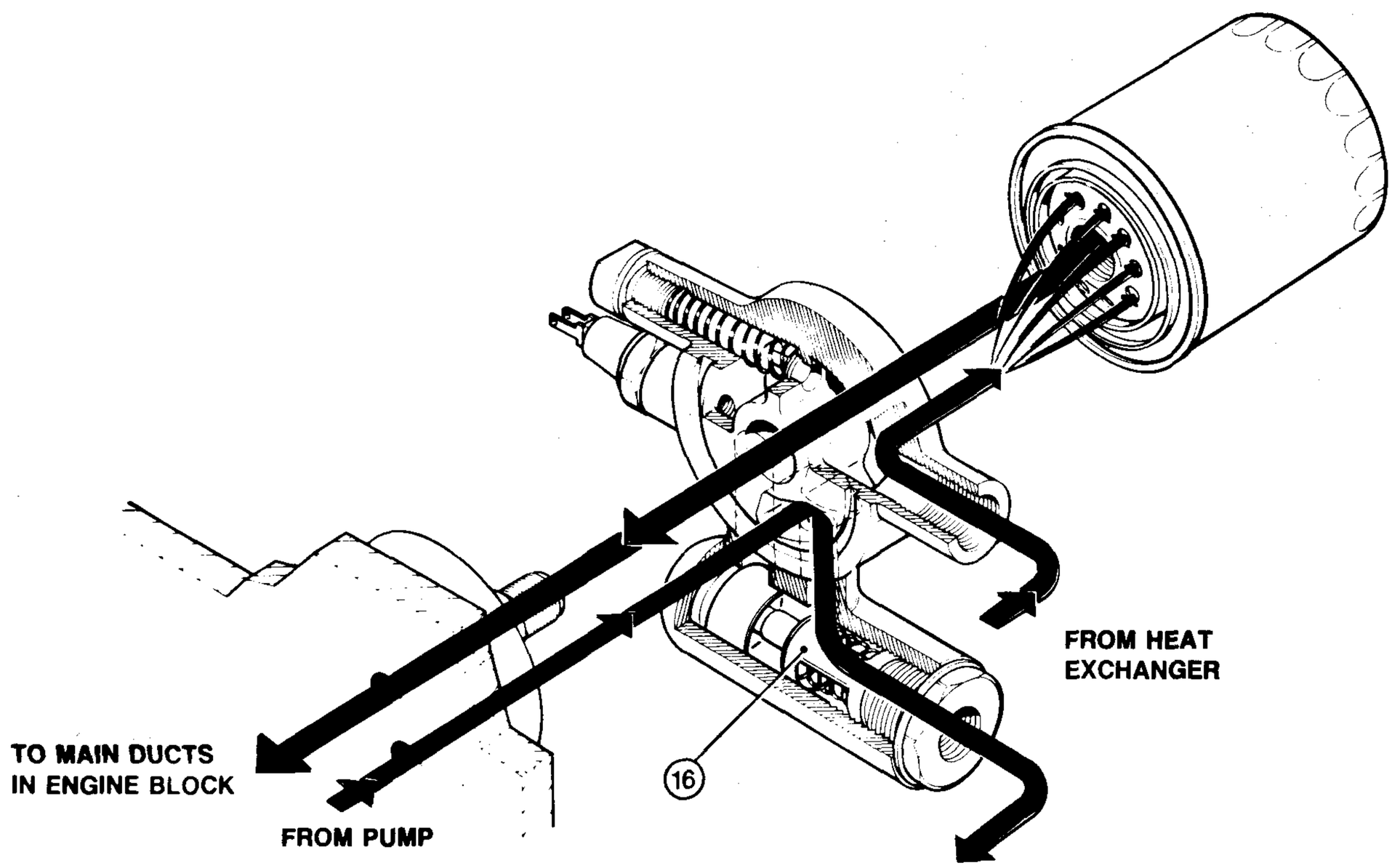

C CONDITION:

— THERMAL-CONTROL VALVE OPEN
— OVERPRESSURE VALVE OPEN

If the heat exchanger or the piping connected to it are clogged, oil pressure in the filter support causes overpressure valve (18) to open, so oil can flow to the filter.

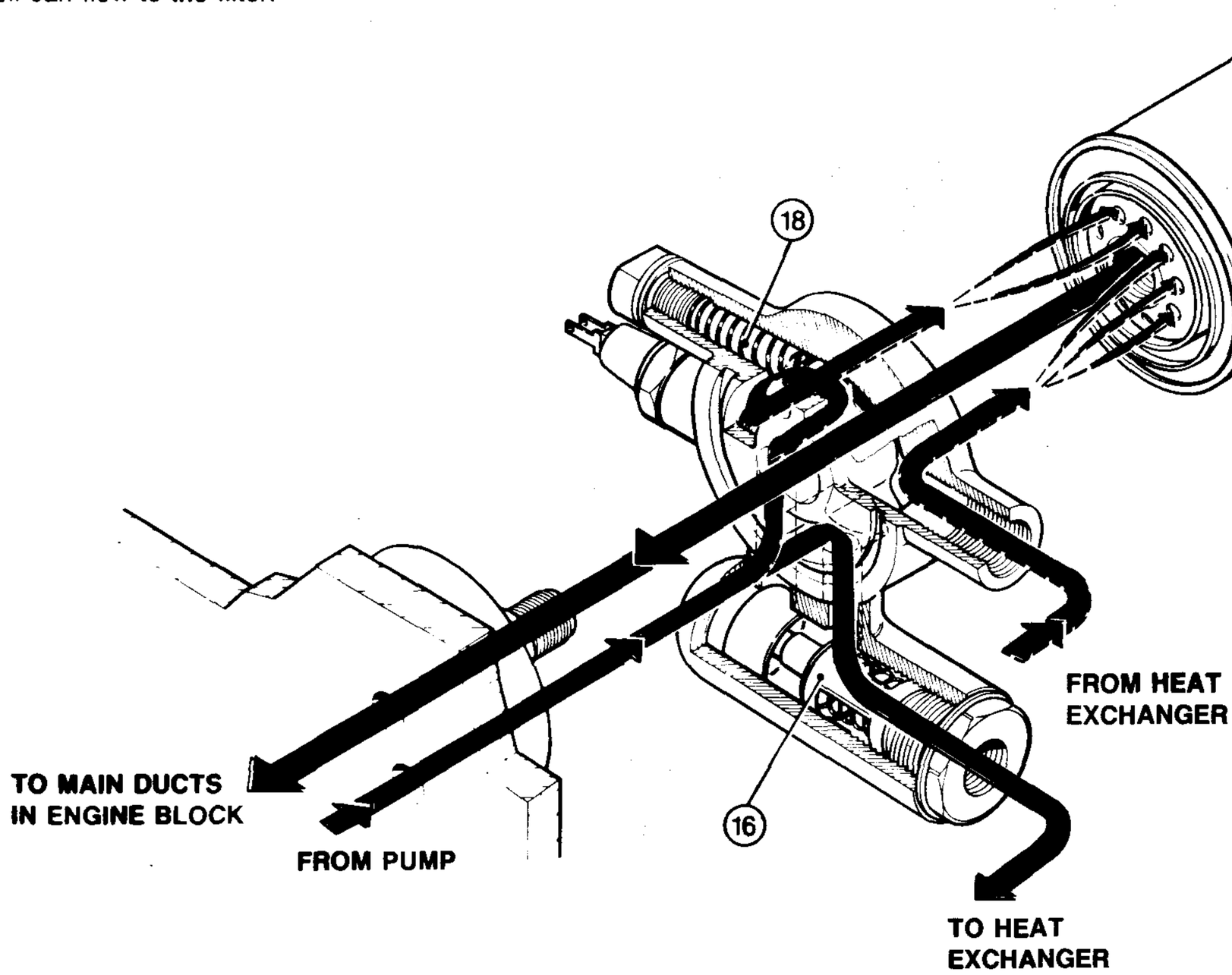

OIL PUMP INSTALLATION

a. Lubricate pump drive shaft with engine oil.

b. Install oil pump on front cover as described under «Front Cover Assembly».

c. Install oil pan as described under «Oil Pan Installation».

d. Top up engine with the specified oil (AGIP Sint 2000 10W50 or IP SINTIAX 10W40).

OIL FILTER REPLACEMENT

a. Drain oil from pan with a warm engine.

b. Remove filter (1) using a suitable wrench.

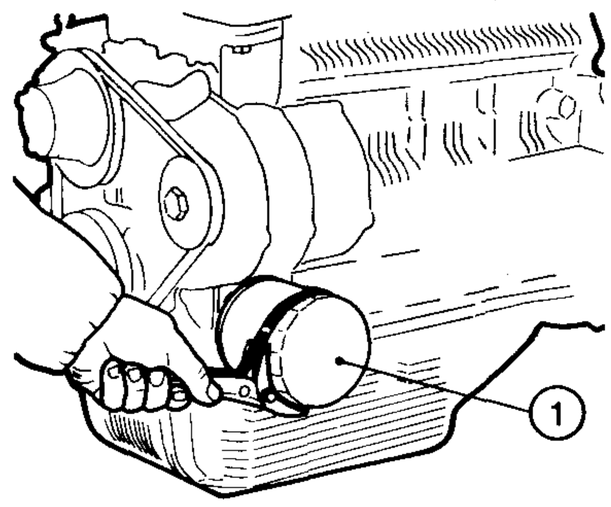

1. Oil filter

c. Install a new filter of the specified type and tighten by hand.

d. Top up engine with the specified oil. Run the engine for a few minutes and check for oil leaks.

ENGINE OVERHAUL

Twin Spark 2.0

ENGINE LONGITUDINAL SECTION

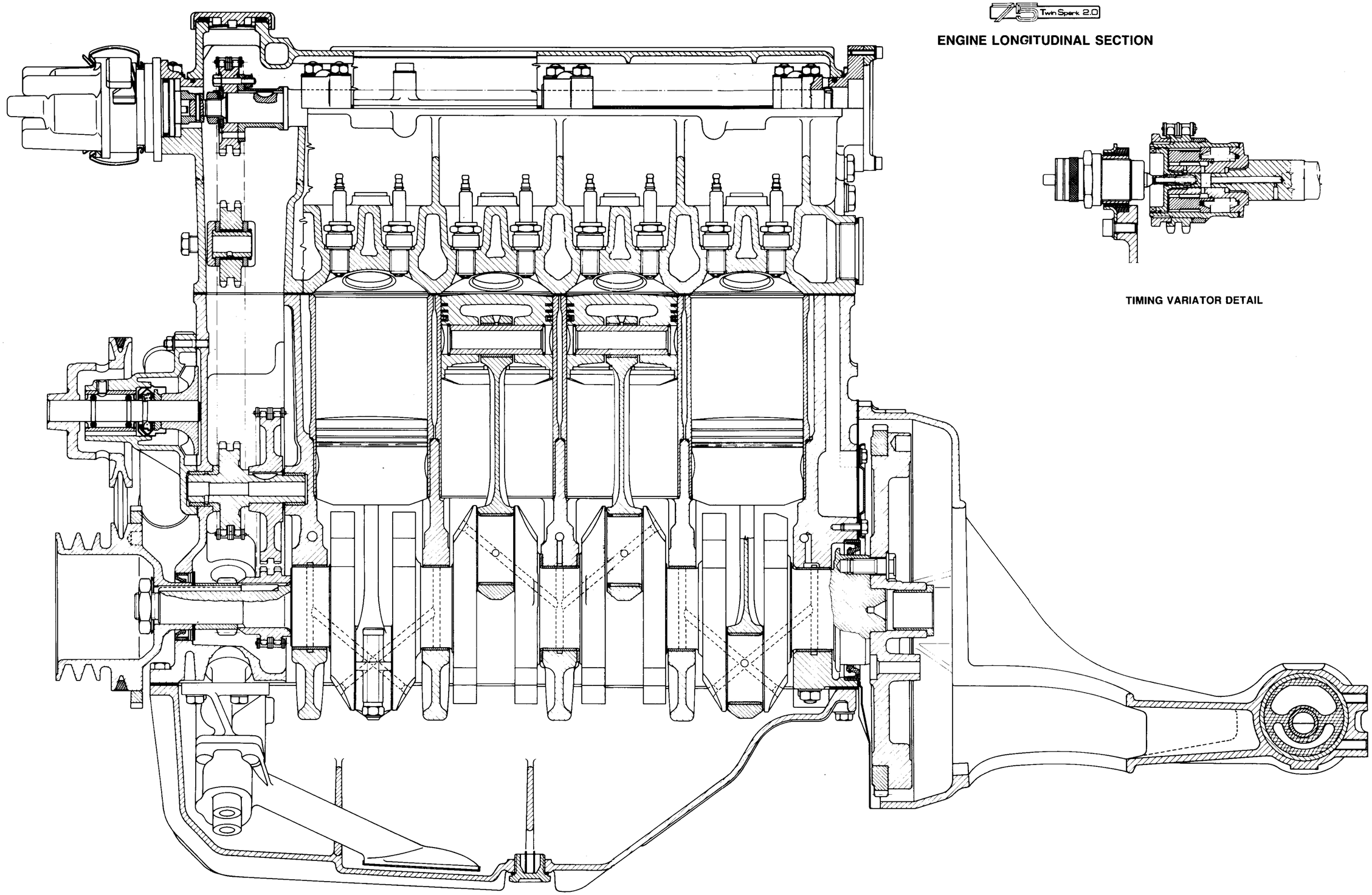

TIMING VARIATOR DETAIL

ENGINE CROSS SECTION

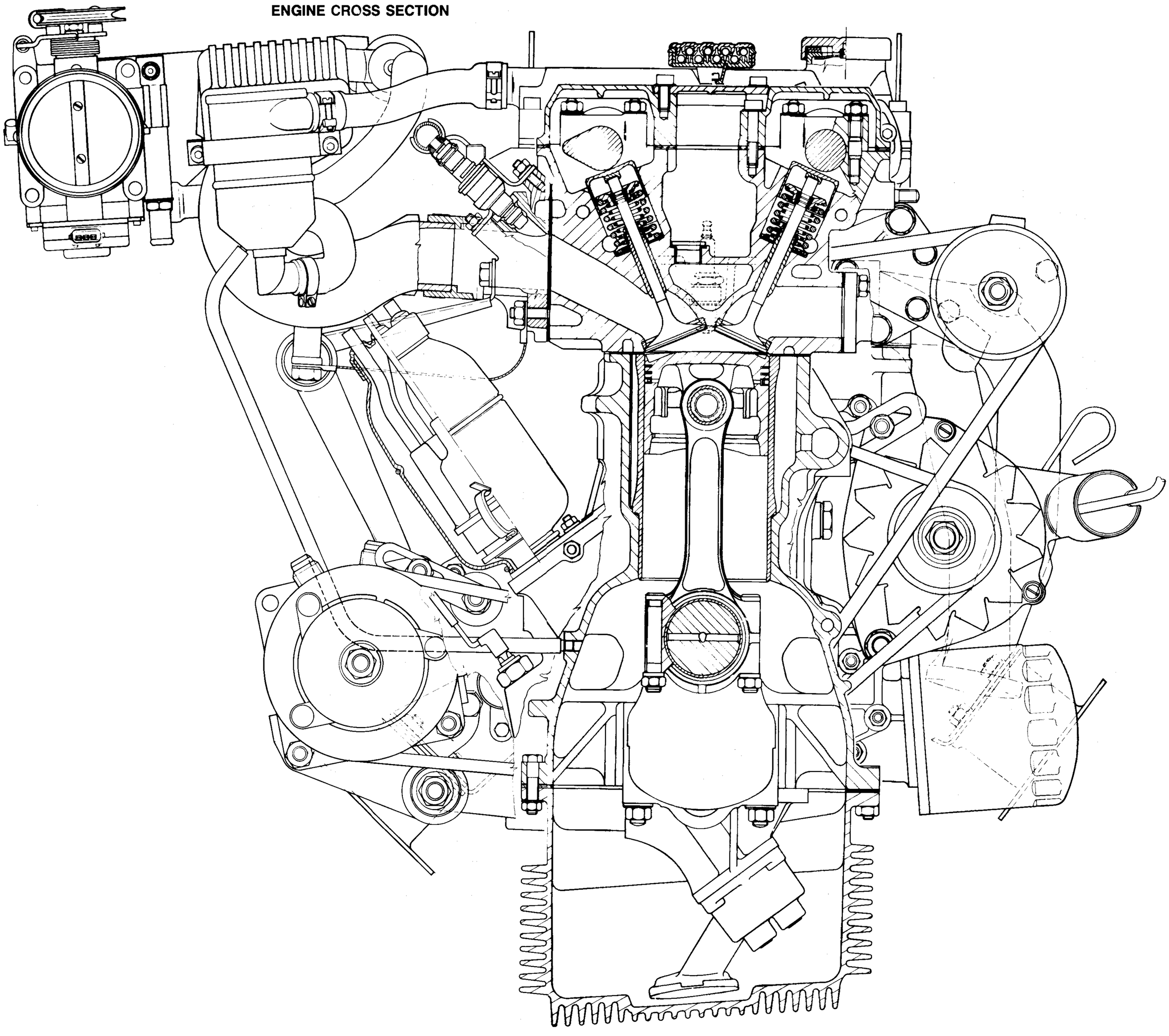

ENGINE EXTERNAL COMPONENTS (FIRST PART)

1. Timing cover securing screw
2. Timing cover
3. Spark-plug cover securing screw
4. Spark-plug cover
5. Front and rear spark plugs (2 per cylinder)
6. Timing cover gasket
7. Cylinder head gasket
8. Rear cover gasket
9. Rear cover
10. Spacer
11. *Engine flywheel*
12. Starting motor
13. Gasket
14. Rear cover
15. Flywheel securing screws
16. Lock washer
17. Propeller shaft
18. Oil sump gasket
19. Oil sump
20. Oil pump
21. Oil filter
22. Sealing ring
23. Crankshaft pulley
24. Lock washer
25. Pulley securing nut
26. Alternator
27. Driving belt
28. Adjusting bracket
29. Water pump
30. Gasket
31. By-pass sleeve
32. Three-way union
33. Temperature-regulation unit
34. Intake manifold connection sleeve
35. Protections
36. Spring fastener
37. Ignition distributor for front spark plugs
38. Sealing ring
39. Front cover
40. Gaskets
41. Gear
42. Shim
43. Pinion
44. Gear, oil pump and ignition distributor
45. Metal oil seal
46. Key
47. Chain
48. Camshaft drive chain
49. Spring fastener
50. Protections
51. Ignition distributor for rear spark plugs
52. Air intake sleeve
53. Clamp
54. Air shroud for alternator cooling
55. Rear bush
56. Starting motor support

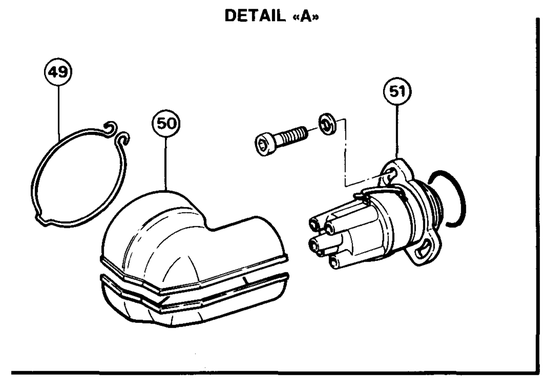

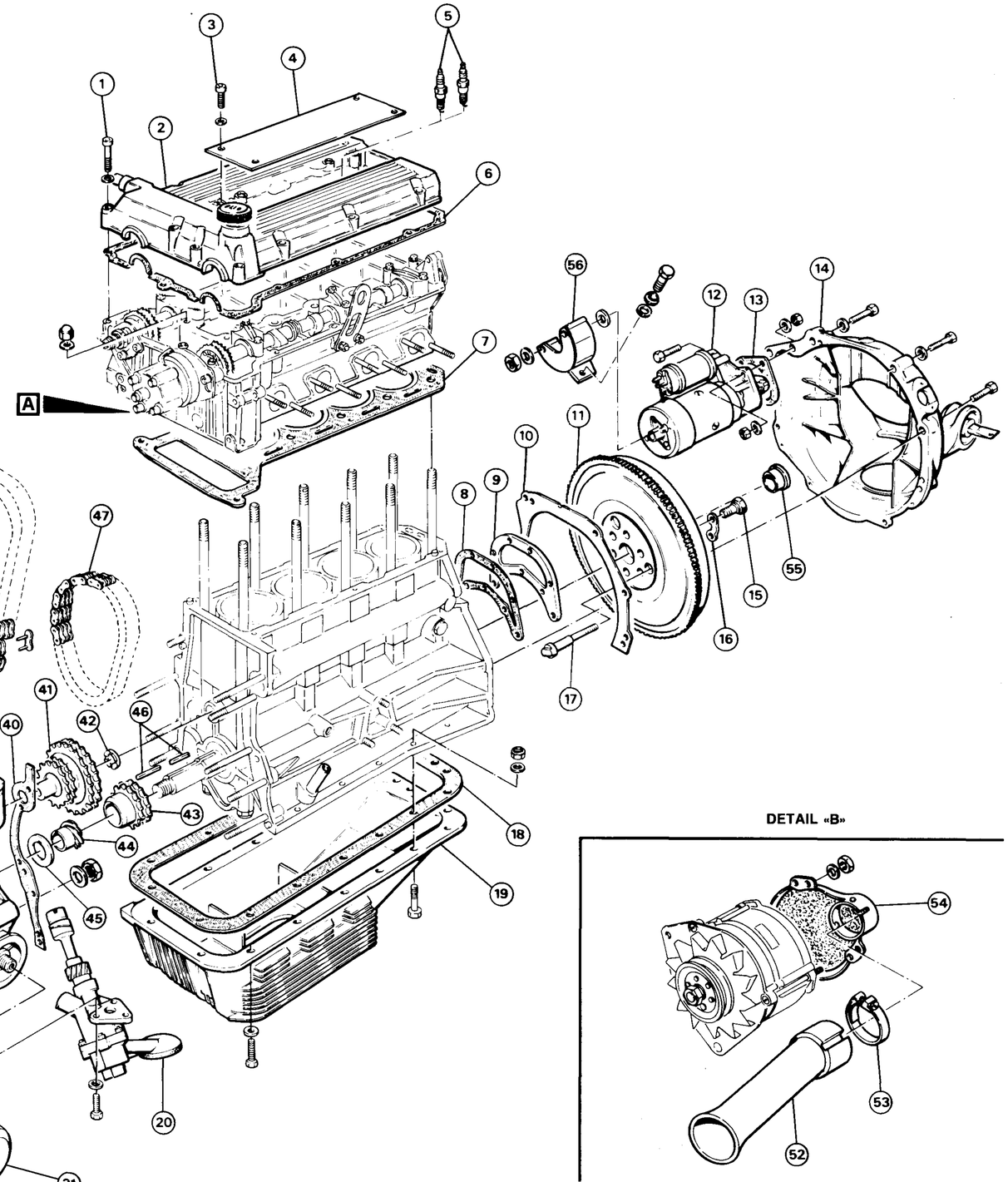

ENGINE EXTERNAL COMPONENTS (SECOND PART)

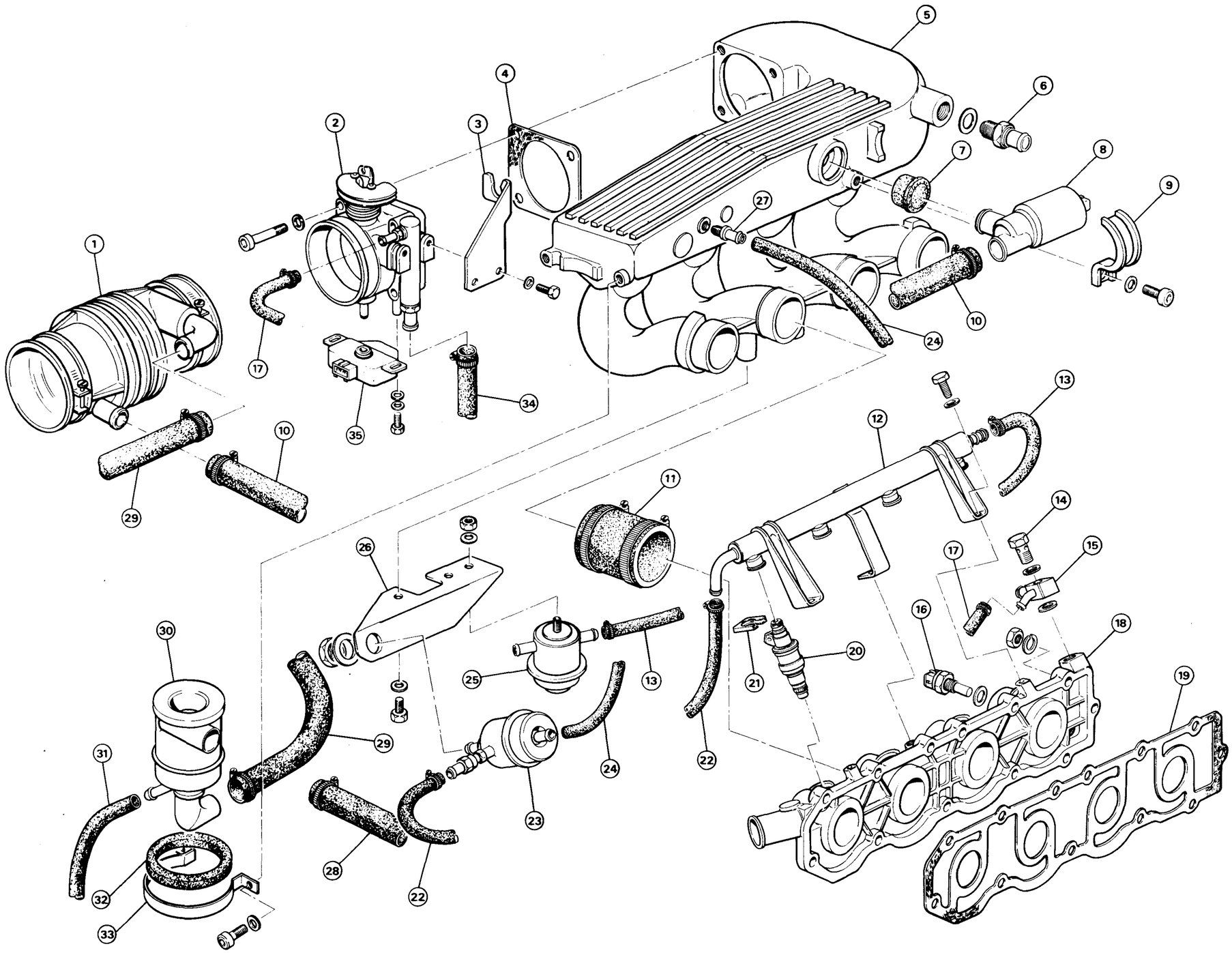

1. Intake duct
2. Accelerator single-throttle-valve body
3. Accelerator control cable bracket
4. Gasket
5. Intake air box
6. Power-brake vacuum intake hose union
7. Actuator rubber seal
8. Idle actuator
9. Actuator clamps
10. Hose for idle R.P.M. adjustment
11. Connection sleeve, intake air box to intake manifold
12. *Fuel manifold*
13. Fuel delivery hose
14. Deflecting block union
15. Two-way deflecting block
16. Engine cooling-system liquid temperature sensor
17. Cooling-system liquid delivery hose from cylinder head to single-throttle-valve body
18. Inlet manifold
19. Gasket
20. Electric injector
21. Electric-injector fastener
22. Fuel return hose
23. Fuel pressure regulator
24. Vacuum intake hose for fuel pressure regulator
25. Damper
26. Support, damper and fuel pressure regulator
27. Union, vacuum intake hose
28. Oil vapour breather pipe from cylinder head
29. Oil-vapour recycle hose
30. *Oil-vapour sedimenter*
31. Oil recycling hose
32. Rubber ring
33. Oil vapour sedimenter clamp
34. Cooling-system liquid delivery hose from single-throttle-valve body to heater
35. Throttle-valve switch

ENGINE EXTERNAL COMPONENTS (THIRD PART)

1. Lower body, air filter
2. Filter element
3. Starting flange
4. Gaskets
5. Air filter cover
6. Sealing plug
7. Air flow-meter
8. Tie-rod, air intake box
9. Right side support
10. Cover
11. Gasket
12. Spark-plug cover
13. Spark-plug wiring container
14. Lifting stirrup
15. Engine oil minimum level sender (ALFA ROMEO CONTROL)
16. Asbestos gasket
17. Exhaust manifold, 1st and 4th cylinders
18. Exhaust manifold, 2nd and 3rd cylinders
19. Engine oil minimum pressure sender
20. Left side support
21. R.P.M. and timing sensor
22. R.P.M. and timing sensor bracket
23. Air intake duct for filter
24. Rubber ring
25. Power steering pump
26. Power steering pump bracket
27. Power steering pump pulley
28. Key
29. Power steering pump driving belt
30. Support
31. Bracket, tension pulley
32. Tension pulley
33. Rubber bushing securing lower air filter body

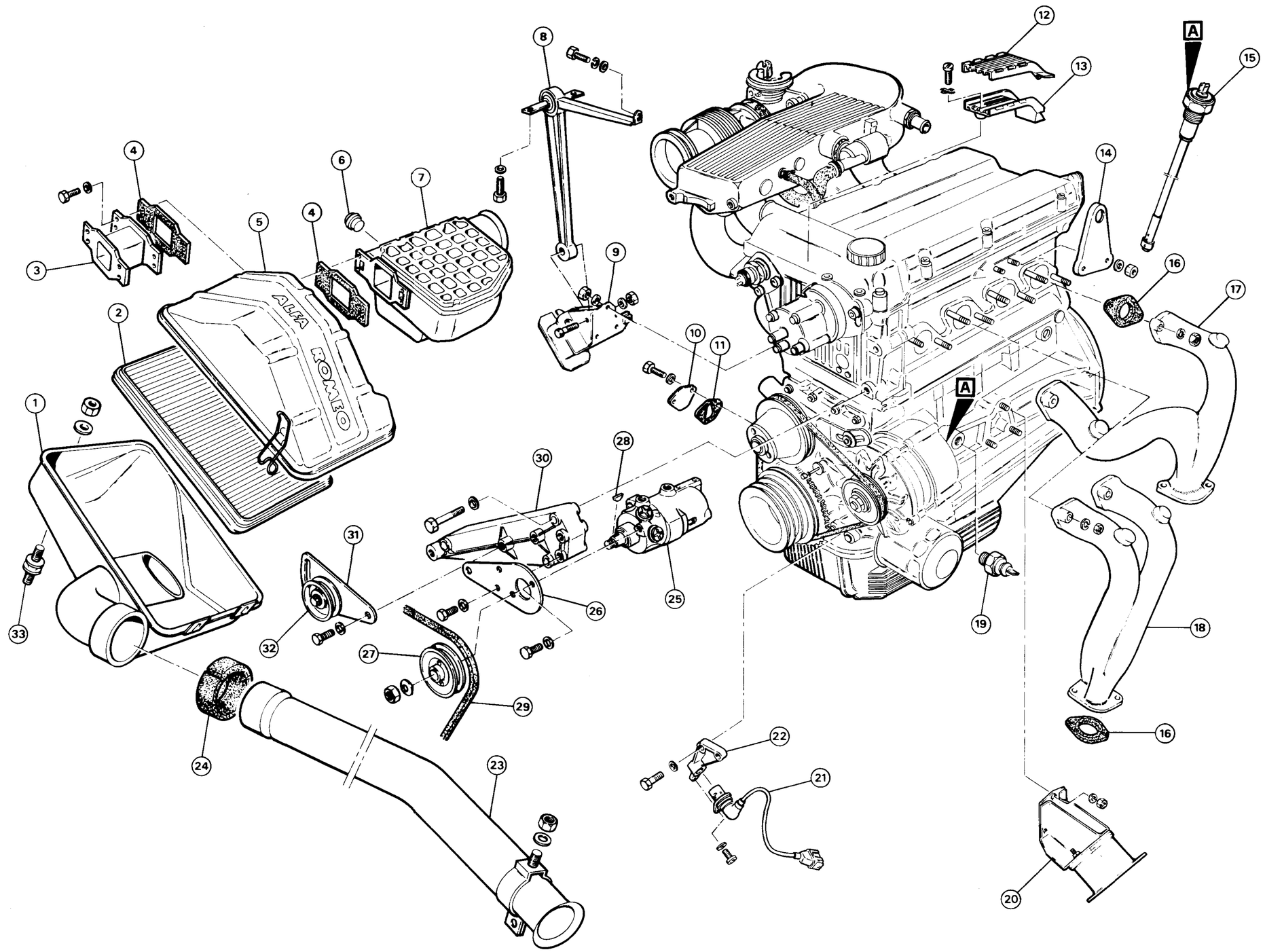

ENGINE BLOCK AND CYLINDER HEAD

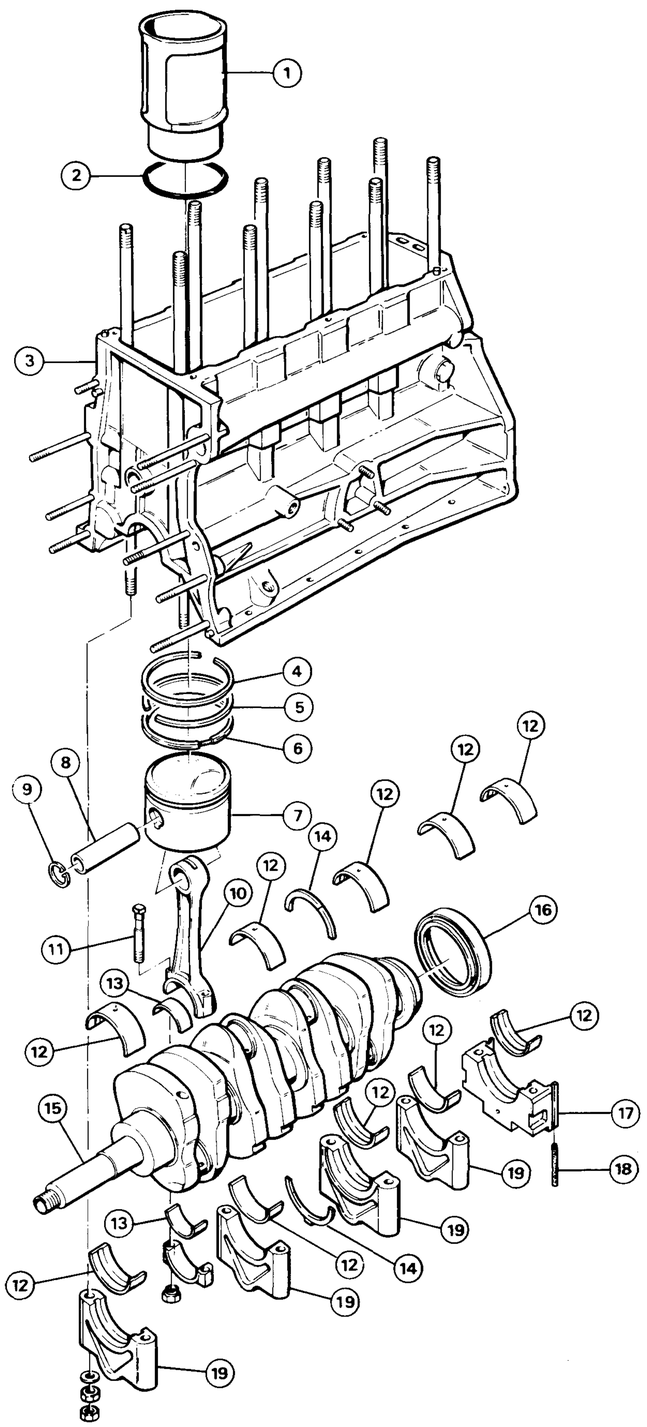

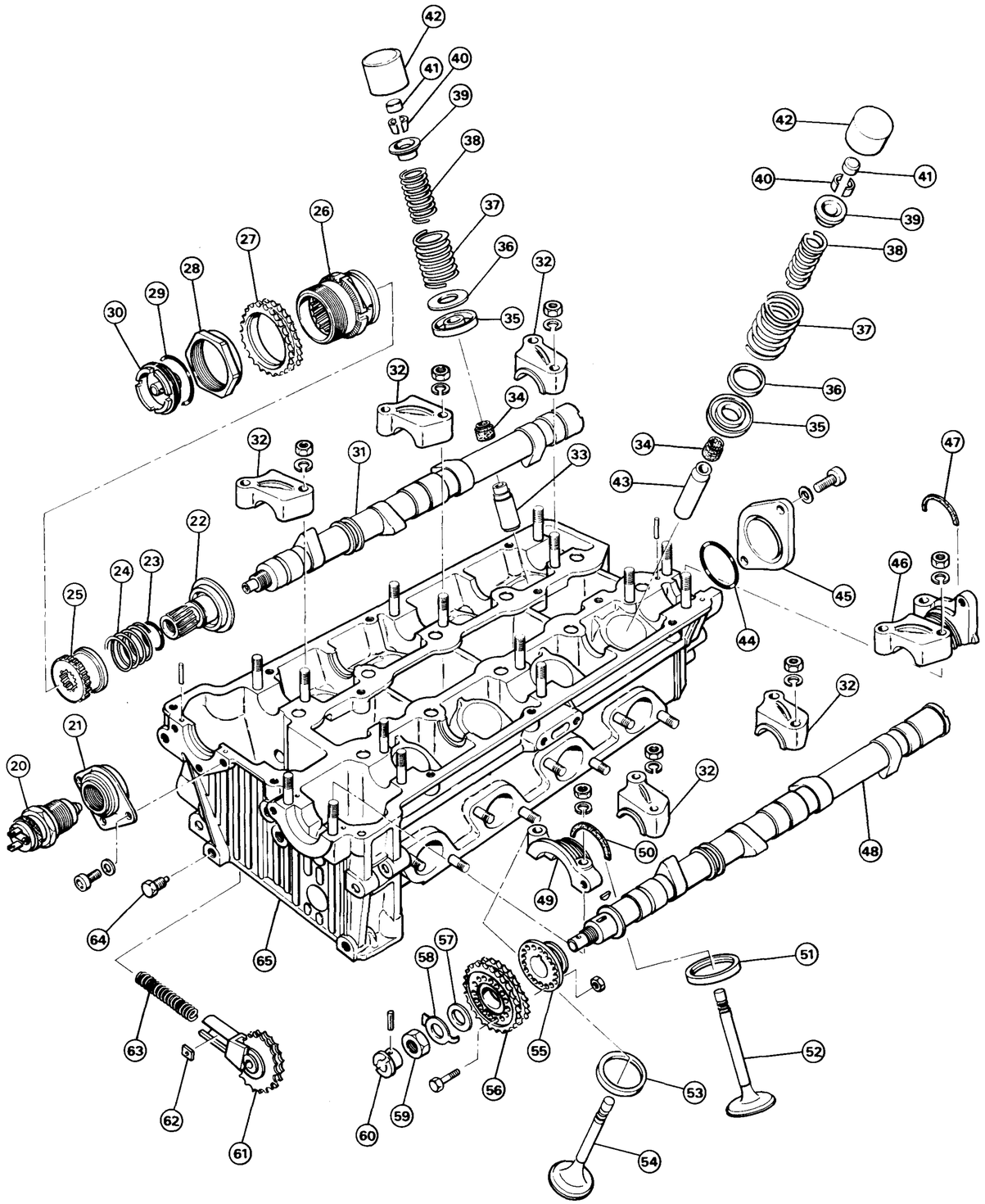

1. Cylinder liner
2. Sealing ring
3. Cylinder block
4. First sealing ring
5. Second sealing ring
6. Oil scraper ring
7. Piston
8. Piston pin
9. Piston ring
10. Connecting rod
11. Screw
12. Main journal bearing halves (number 10)
13. Big end bearing halves (number 8)
14. Thrust ring halves (number 4)
15. Crankshaft
16. Rear sealing ring
17. Rear main bearing cap
18. Plug seal
19. Main bearing caps (number 4)
20. Timing variator solenoid
21. Solenoid bracket
22. Timing variator bracket
23. Sealing ring
24. Spring
25. Helically-cogged piston
26. Helically-cogged sleeve
27. Camshaft drive chain gear
28. Timing variator stop nut
29. Sealing ring
30. Cover with control valve
31. Camshaft (suction side)
32. Camshaft cap
33. Suction valve guide
34. Rubber oil seal
35. Lower cap
36. Spring shim
37. External spring
38. Internal spring
39. Upper cap
40. Retainer locks
41. Valve tip cup
42. Tappet
43. Exhaust valve guide
44. Sealing ring
45. Rear support cover
46. Rear support
47. Dust gasket
48. Camshaft (exhaust side)
49. Front support
50. Dust gasket
51. Suction valve seat
52. Suction valve
53. Exhaust valve seat
54. Exhaust valve
55. Flange
56. Camshaft drive chain gear
57. Washer
58. Safety stop
59. Nut
60. Distributor drive tang
61. Chain tensioner gear
62. Retaining plate
63. Spring
64. Spring securing screw
65. Cylinder head

ENGINE DISASSEMBLY

PRELIMINARY OPERATIONS

a. Remove the engine from the vehicle proceeding as specified in «Engine Removal and Installation» and support it with a suitable hydraulic lift.

b. Unscrew and remove screws (1) securing starter (2) with relevant nuts and washers.

c. Remove starter (2) with relevant shim and support.

d. Unscrew screws (3) and remove rear cover (4) from engine.

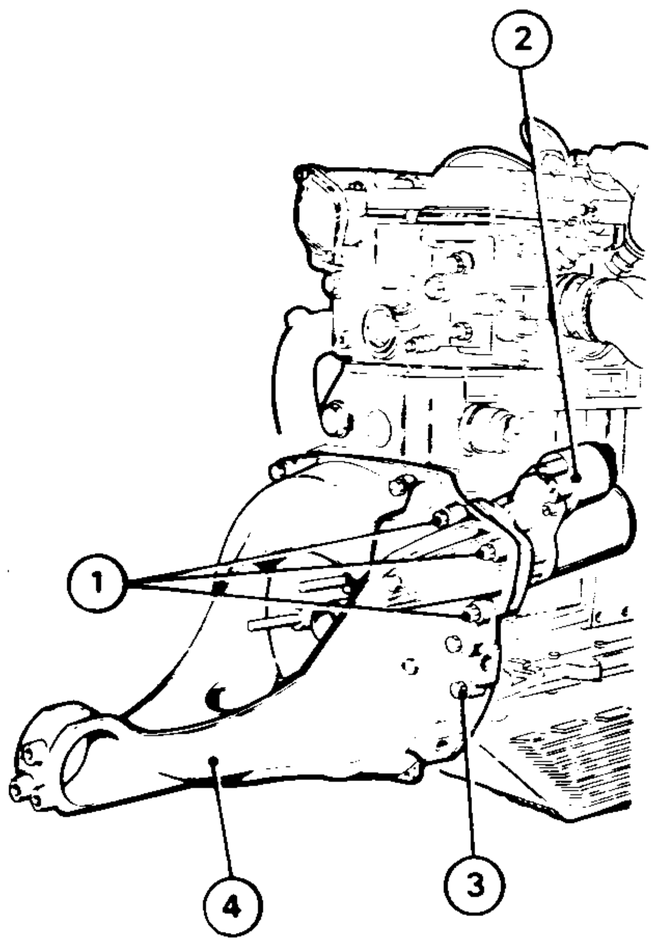

1. Starter securing screw
2. Starter
3. Rear cover securing screw
4. Rear cover

e. Remove bolts (5) securing tie rod (6) to intake manifold and bolt (7) with relevant anchor bolt to engine mount; then remove tie rod (6).

f. Unscrew nuts (8) and remove engine mounts (9) on both sides of engine block.

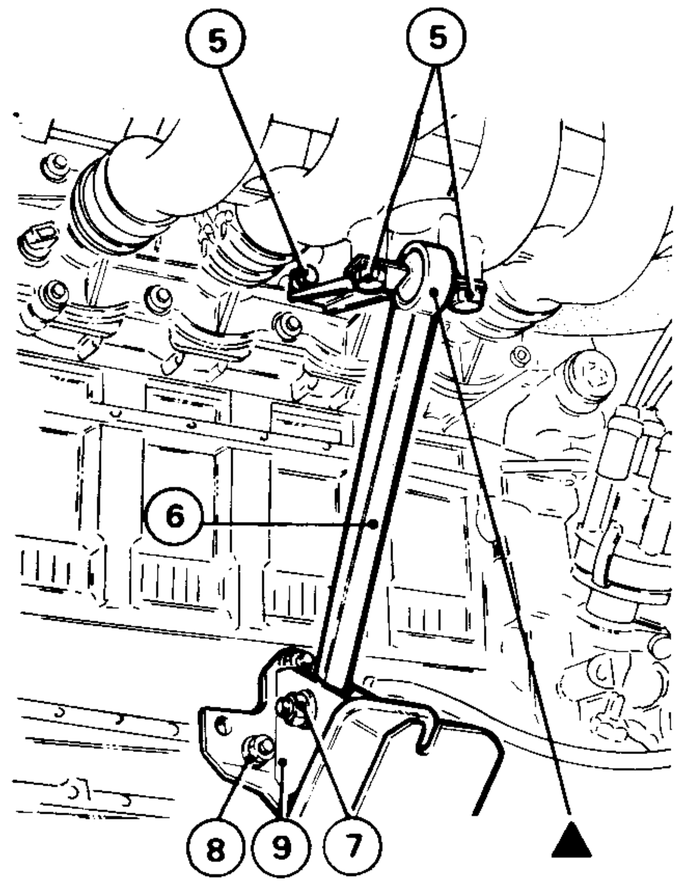

▲ **Component aspect not real**

5. Tie-rod securing bolts
6. Tie rod
7. Bolt
8. Engine-mount securing nuts
9. Engine mount

g. Install brackets (10) and through the hydraulic lift position engine on a suitable revolving overhaul stand (11).
Then lock brackets to stand supports through bolts.

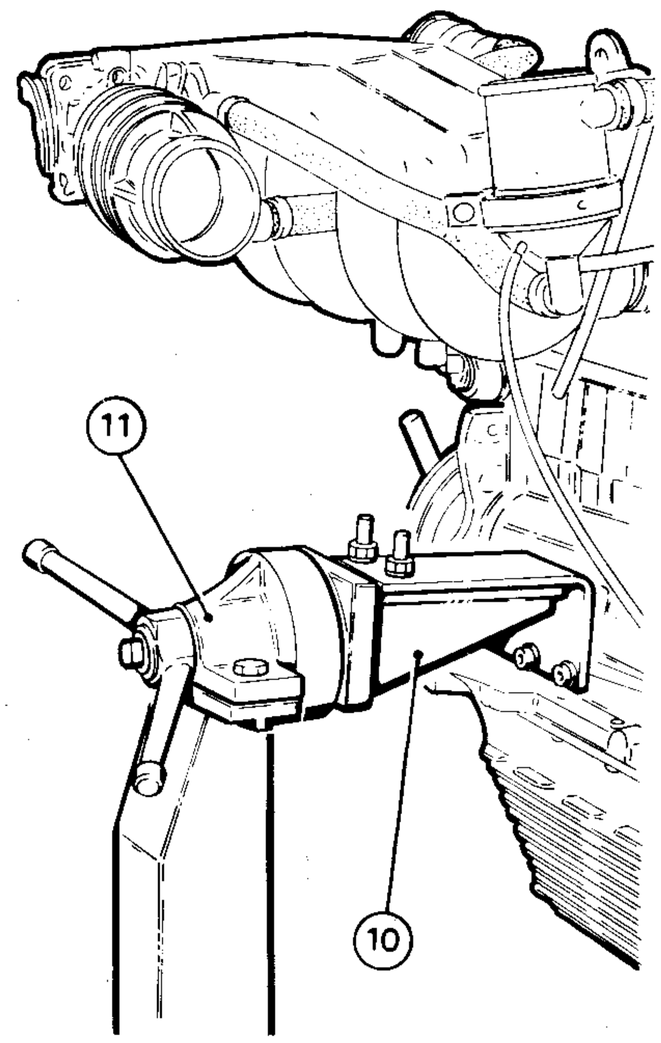

10. Brackets
11. Revolving overhaul stand

h. Release caps (12) and (13), disconnect oil recovery hose (14) from oil vapour sedimenter (15), sleeve (16) from three-way union (17) loosening relevant clamp and oil vapour out-let hose (18) from timing cover.

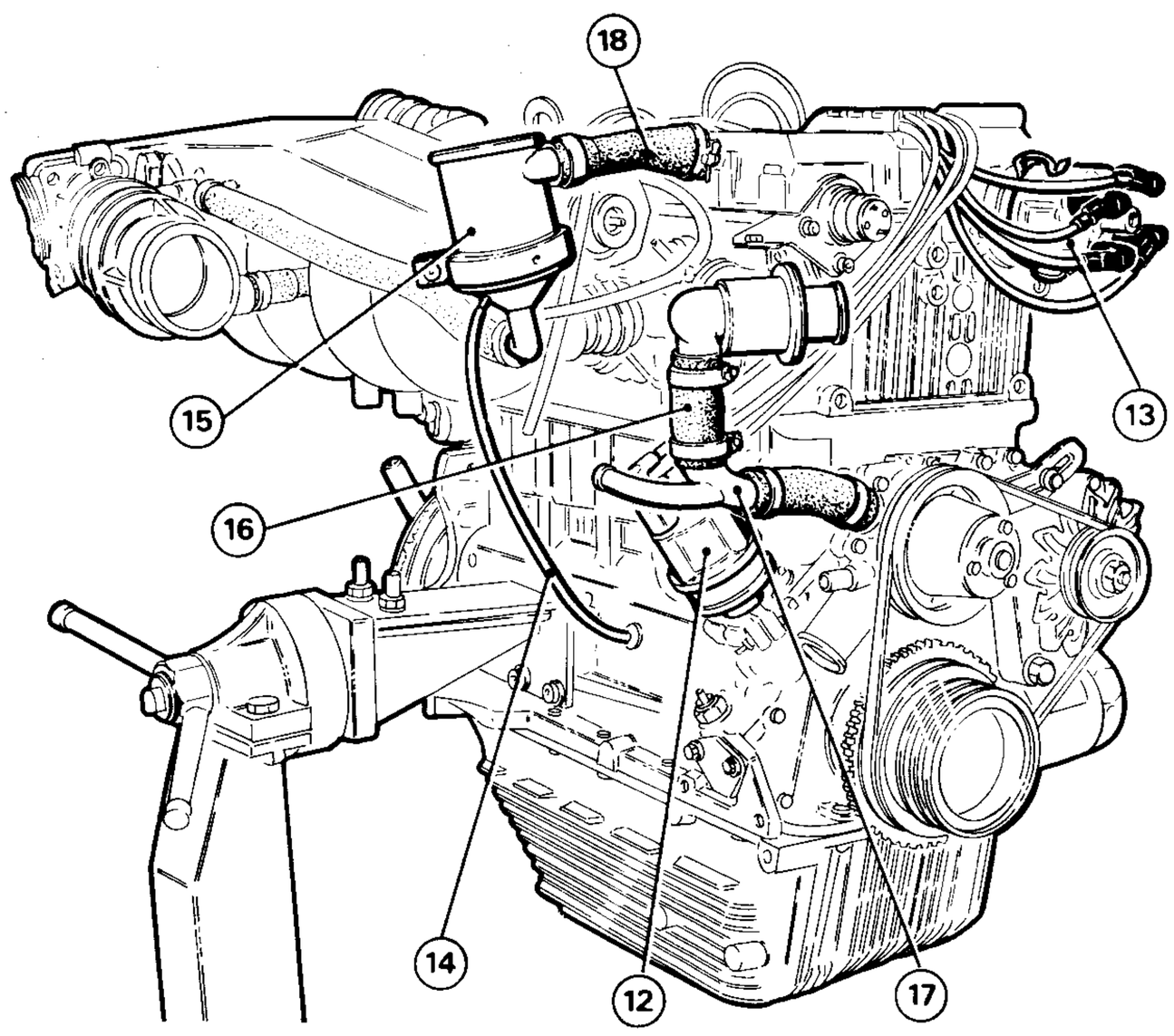

12. Front spark plug distributor cap
13. Rear spark plug distributor cap
14. Oil recovery hose
15. Oil vapour sedimenter
16. Sleeve
17. Three-way union
18. Oil vapour outlet hose

i. Remove spark plug cover (19), spark plug cable connector plate (20) and disconnect cables from spark plugs.
j. Remove spark plug cabling container (21).

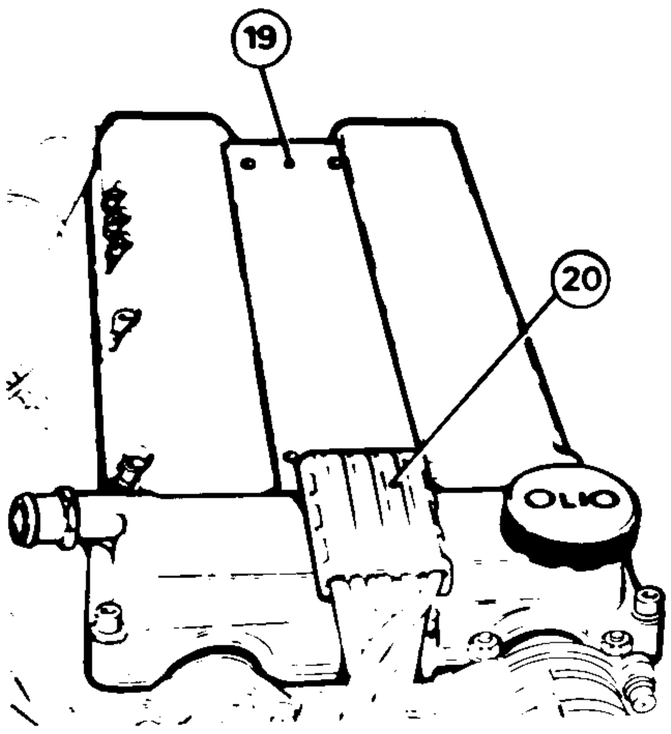

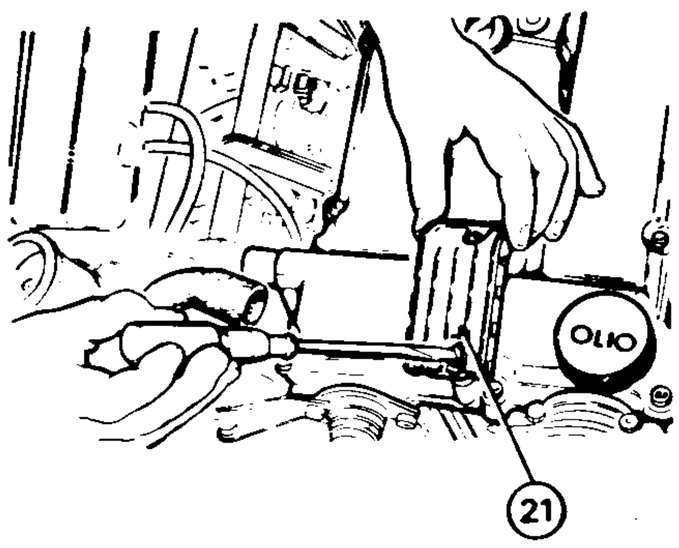

19. Spark plug cover
20. Spark plug cable connector plate
21. Spark plug cabling container

CYLINDER HEAD REMOVAL

a. Unscrew thirteen screws (1) and remove timing cover (2) with relevant gaskets and seal half-rings.

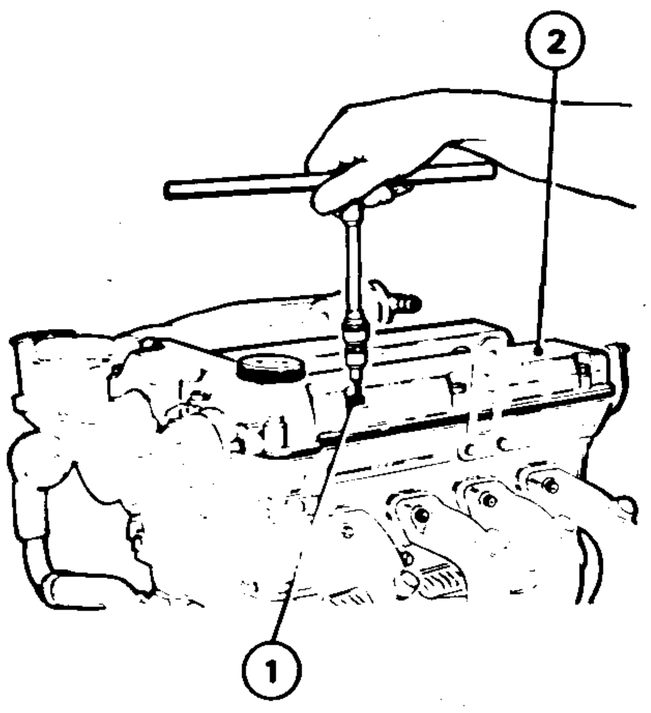

1. Timing cover securing screws
2. Timing cover

b. Fit a special tool on flywheel studs to make it easier to turn crankshaft.

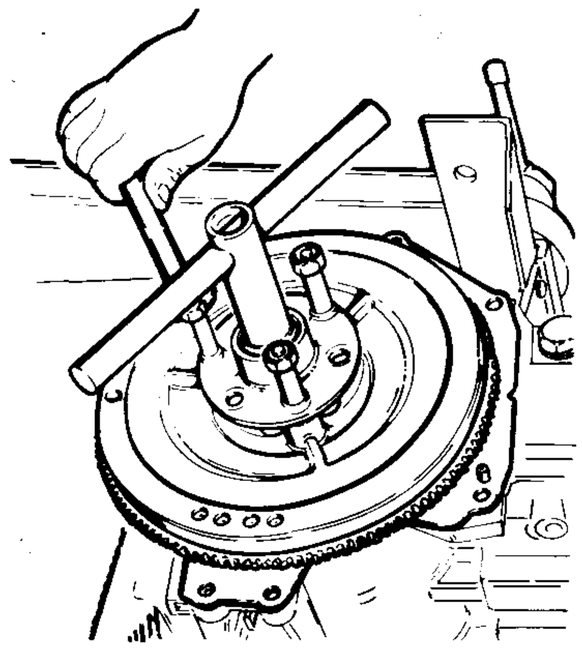

c. Turn crankshaft till master link of timing chain (3) is in such a position that it can be disconnected.
d. Slacken chain tensioner securing screw (4), press chain downward to overcome tensioner spring force and then tighten screw (4) again.

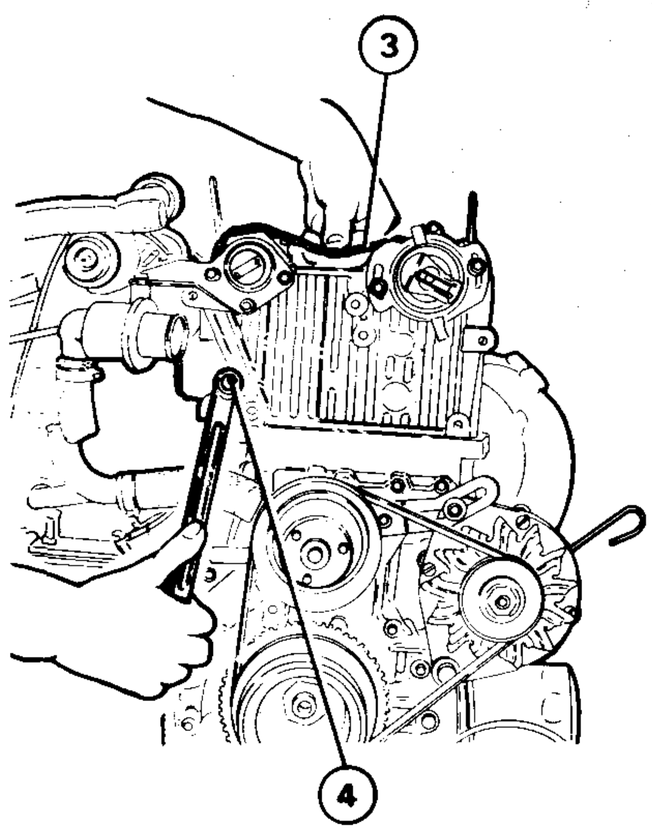

3. Timing chain
4. Chain tensioner securing screw

e. Remove chain master link and free chain from camshaft gears; allow chain to slide toward bottom of engine block.
f. Remove two screws (5) securing front cover to head and then nuts (6) with relevant washers securing head to engine block.

g. Remove cylinder head (7) taking care not to damage engine block studs; remove seal gasket.

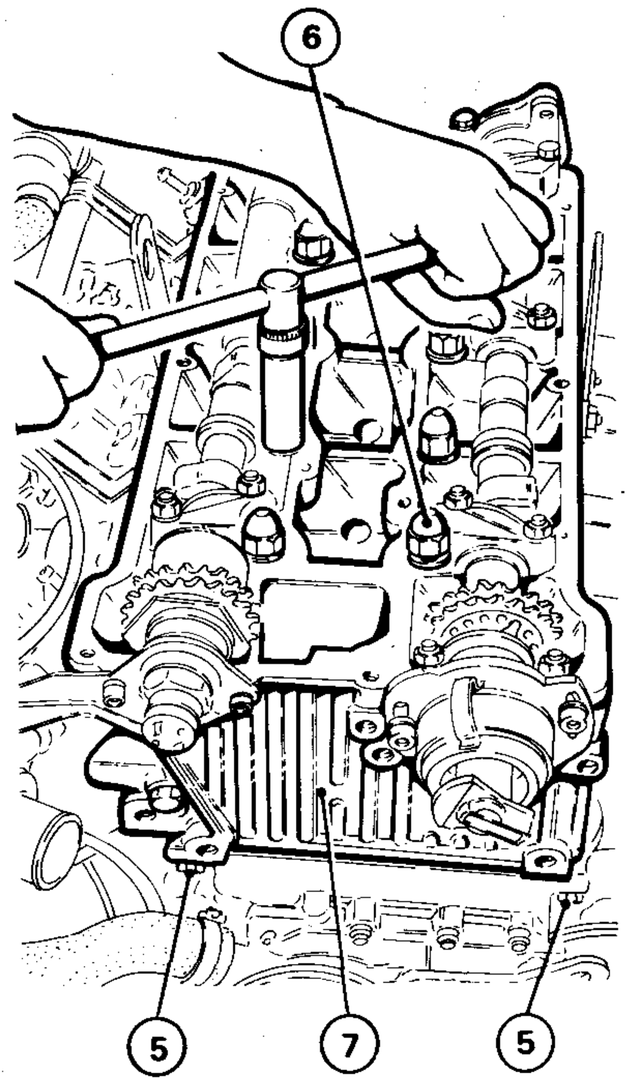

5. Front cover securing screws
6. Head securing nuts
7. Cylinder head

NOTE:
If you think it necessary, remove head from engine block using tool A.2.0451, so as to detach it not only from engine block but also from cylinder liners and to prevent them from sliding out during head removal.

CYLINDER HEAD DISASSEMBLY ON BENCH

a. Clamp revolving support **A.2.0195** in a vice, install fork **A.2.0196** and lock it to support.
Install cylinder head in fork studs and lock it with relevant securing nuts.

NOTE:
If necessary, replace studs of fork A.2.0196 with longer ones.

b. Remove bolt (1) securing thermostat (2) to bracket (3).

c. Remove nuts (4) securing intake manifold (5) and remove manifold assembly and relevant gasket.

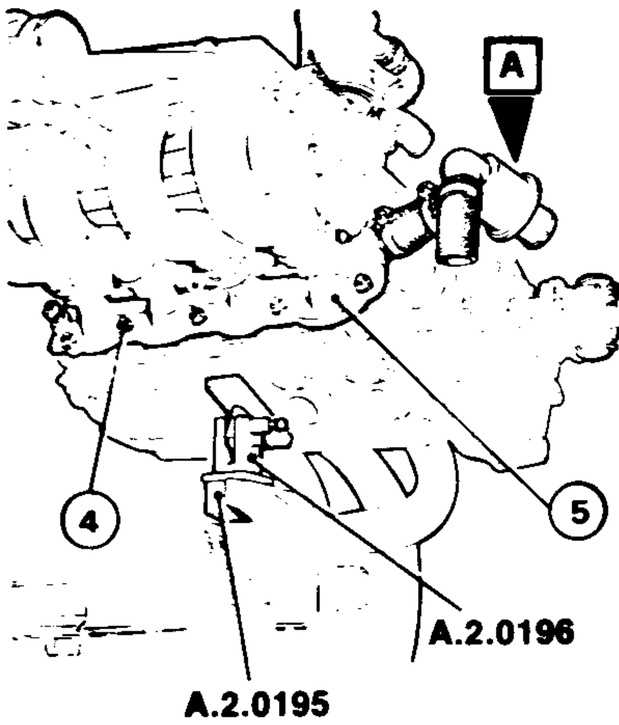

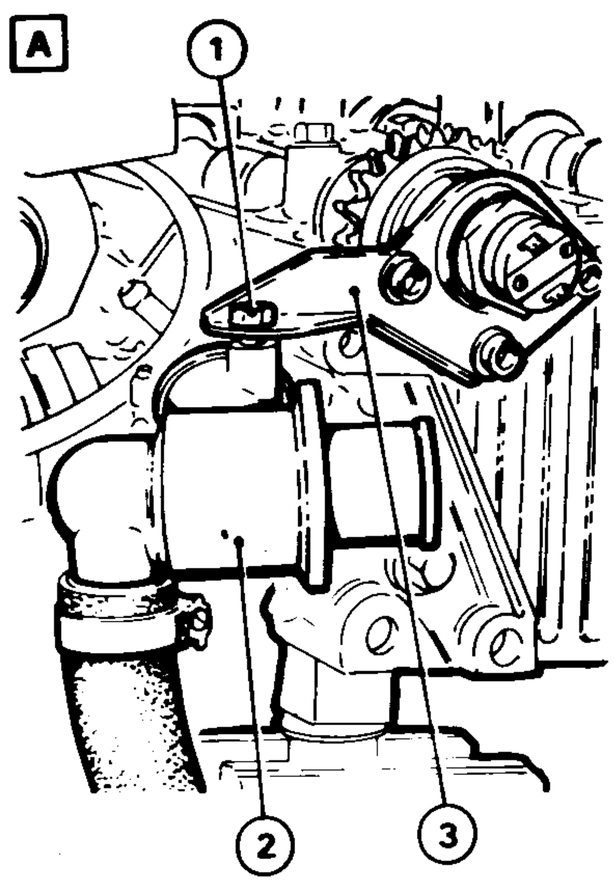

1. Thermostat securing bolt
2. Thermostat
3. Bracket
4. Intake manifold securing nuts
5. Intake manifold

d. Remove nuts (6) securing exhaust manifolds (7) and remove manifolds with relevant gaskets.

e. Unscrew nuts (8) and remove two lifting lugs (9)

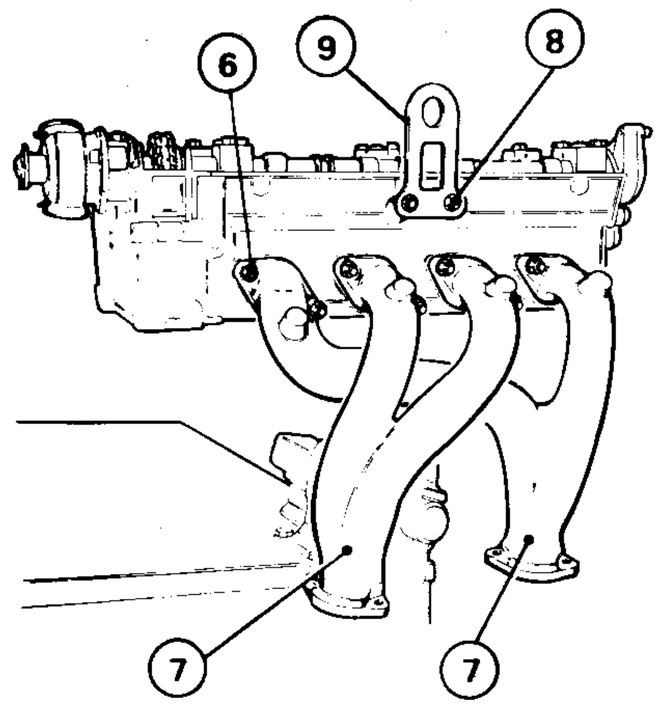

6. Exhaust manifold securing nuts
7. Exhaust manifolds
8. Lifting lug securing nuts
9. Lifting lugs

f. Remove two screws (10) and remove cover (11) of rear camshaft journal, exhaust side.

g. Remove rear journal (12), dust gasket (13) and caps (14) of exhaust-side camshaft (15) after unscrewing relevant securing nuts (16).

h. Remove camshaft (15).

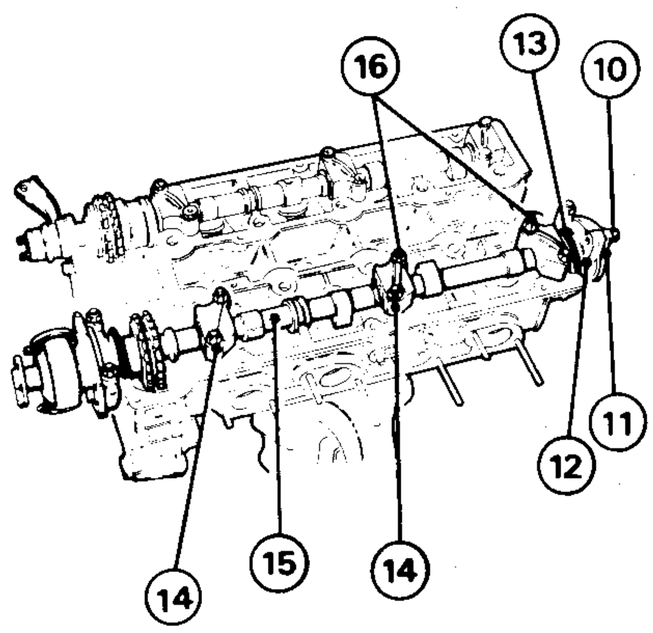

10. Cover securing screws
11. Rear journal cover
12. Rear camshaft journal
13. Dust gasket
14. Camshaft caps
15. Exhaust-side camshaft
16. Camshaft securing nuts

i. Unscrew nuts (17) and remove caps (18) of intake-side camshaft.

j. Remove camshaft (19) complete with timing variator (20).

k. Unscrew two screws (21) securing distributor (22) to head and remove distributor.

l. Remove front journal (23) of exhaust-side camshaft with relevant dust gasket (24), after unscrewing relevant securing nuts (25).

m. Unscrew three screws (26) and remove timing-variator solenoid (27) complete with support (28) and thermostat bracket (29).

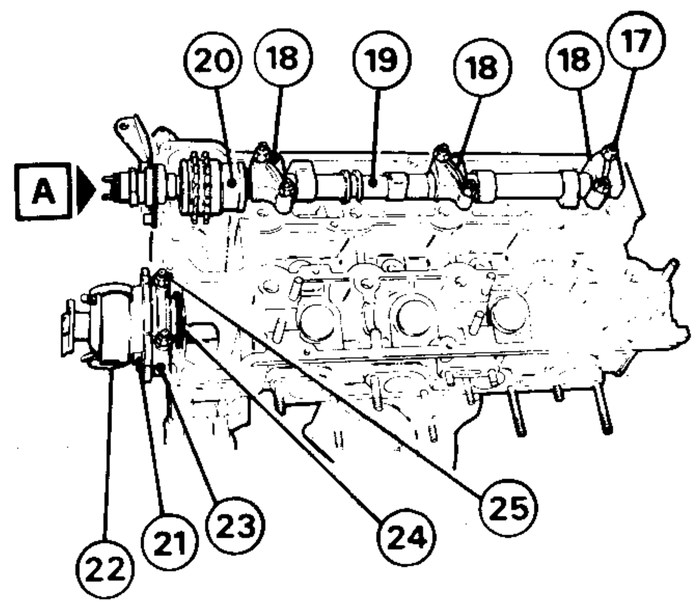

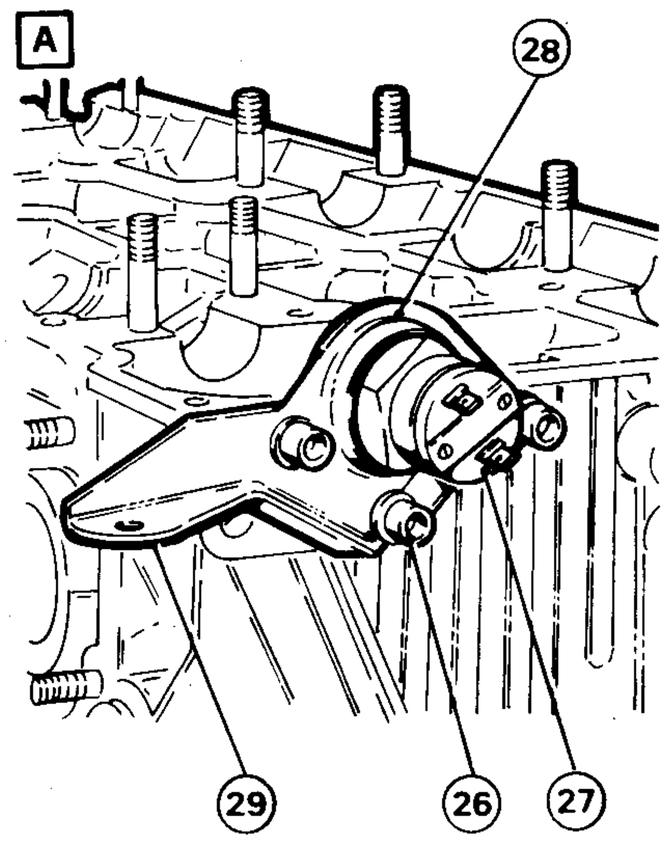

17. Camshaft cap securing nuts
18. Camshaft caps
19. Intake-side camshaft
20. Timing variator
21. Distributor securing screws
22. Ignition distributor
23. Front camshaft journal
24. Dust gasket
25. Front journal securing nuts
26. Solenoid securing screws
27. Timing-variator solenoid
28. Solenoid support
29. Thermostat bracket

n. Remove spark plugs using the special box wrench.

o. Remove valves proceeding as hereinafter specified and using the tools mentioned:

— Insert valve supporting tool **A.2.0192** from the lower part of the spark plug well and lock it with special nut **A.2.0359**.
  Then screw support **A.3.0522** to the threaded part of tool **A.2.0359**.

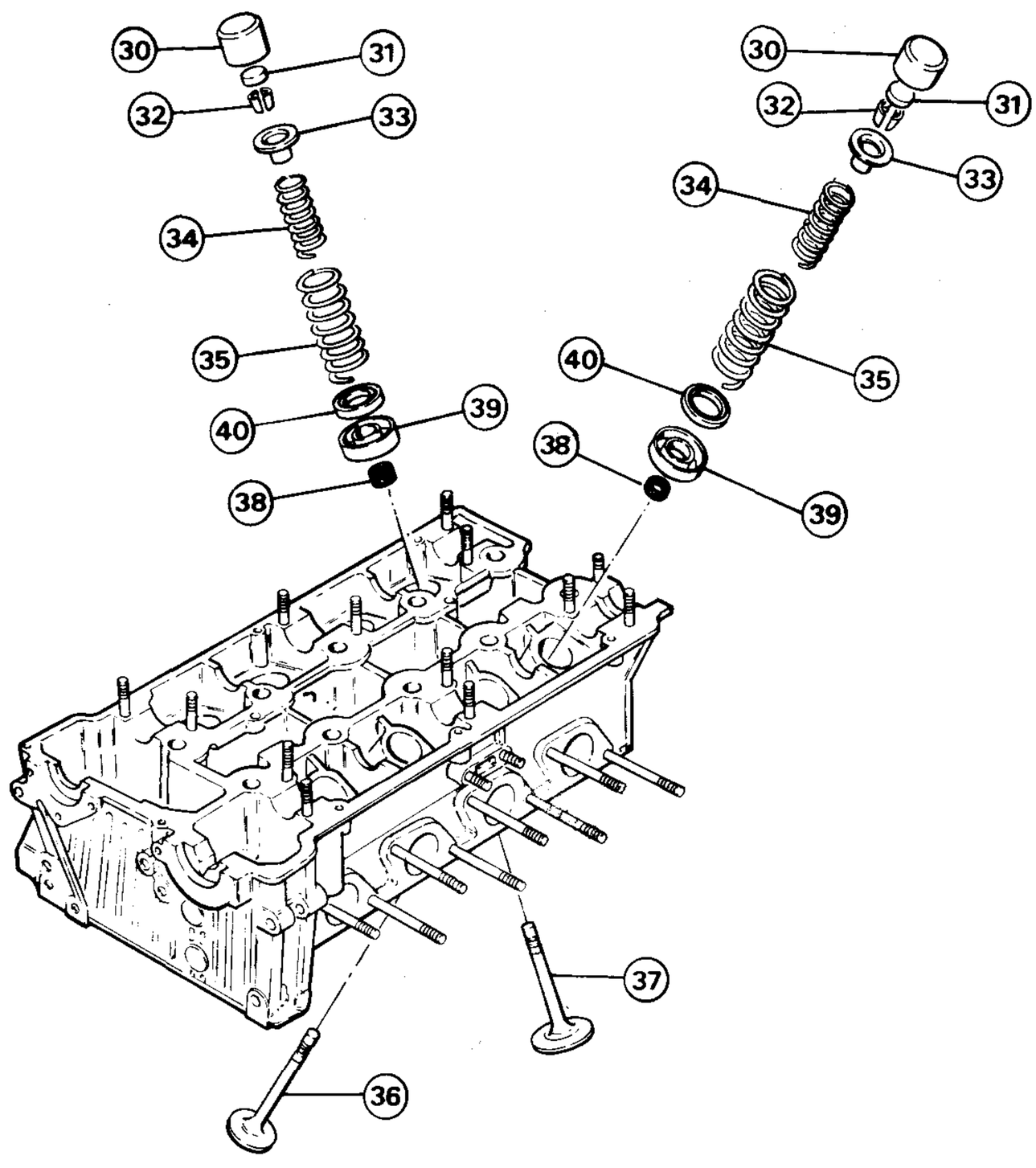

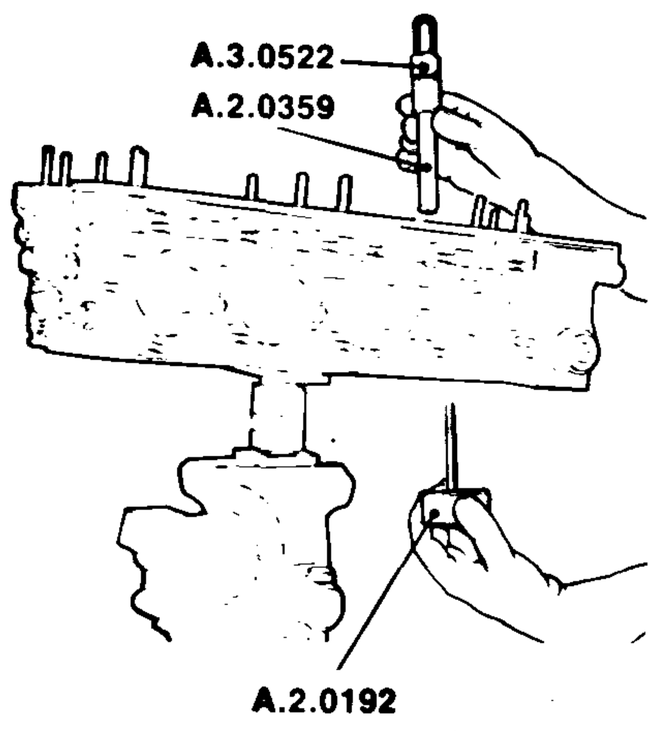

— Slide out valve tappets (30) with valve tip cups (31).
— Provide the tools previously mounted with lever **A.3.0324** with part **A.3.0520** for the removal of the valves.

30. Tappet
31. Valve tip cup
32. Retainer lock
33. Upper cap
34. Inner spring
35. Outer spring
36. Intake valve
37. Exhaust valve
38. Oil grommet
39. Lower cap
40. Shim

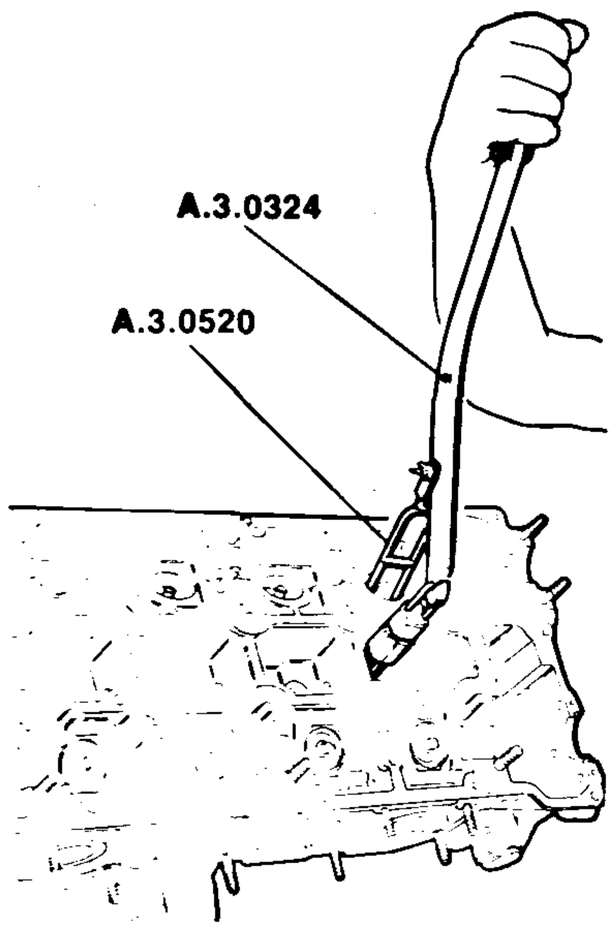

— Press lever **A.3.0324** to compress valve springs, remove retainer locks (32) and then upper cap (33), outer spring (35) and inner spring (34) in this order.
— Remove tools and slide intake valve (36) and exhaust valve (37) out of relevant guides.
  Remove other valve couples moving tools mentioned above and repeating aforesaid procedure.
— Using tool **A.3.0621** remove oil grommets (38) fitted to valve guides.

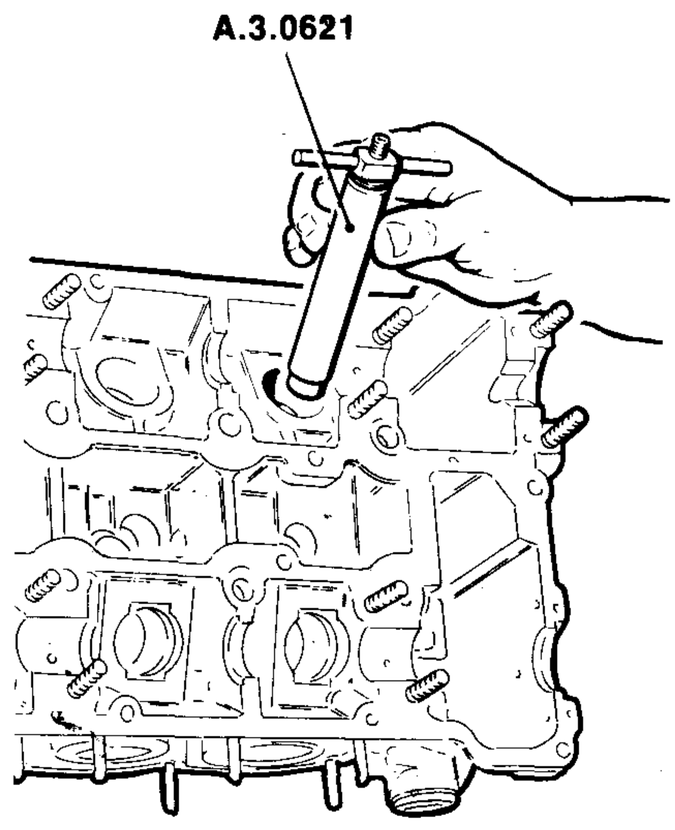

— Then remove lower caps (39) complete with shims (40).

p. Remove chain tensioner from head proceeding as follows:
- Hold chain tensioner (41) in its seat and slacken securing screw (42).
- Relieve spring (43) and remove tensioner.
- Remove screw (42) and plate (44) securing spring to tensioner.

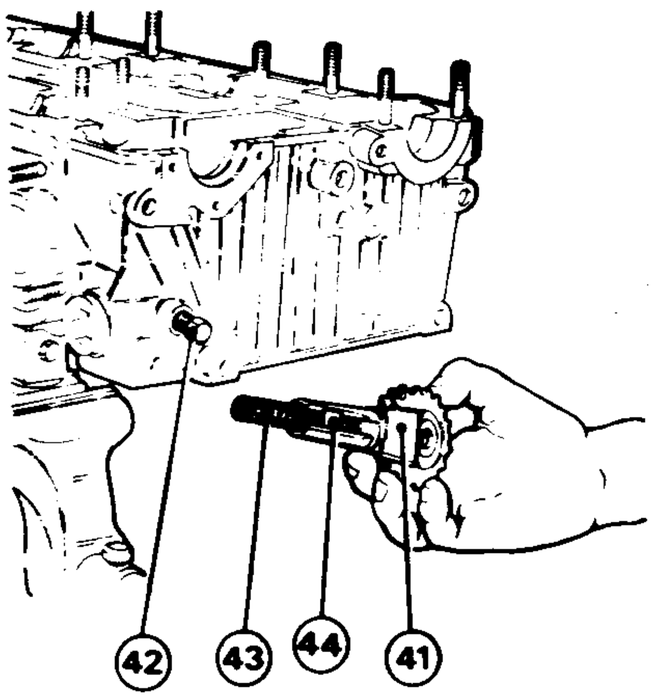

41. Chain tensioner
42. Spring securing screw
43. Spring
44. Securing plate

INTAKE-SIDE CAMSHAFT AND TIMING VARIATOR DISASSEMBLY

Timing variator removal

a. Clamp camshaft (1) in a vice provided with protective jaws and using tool **A.5.0232** unscrew nut (2); then remove sprocket (3).

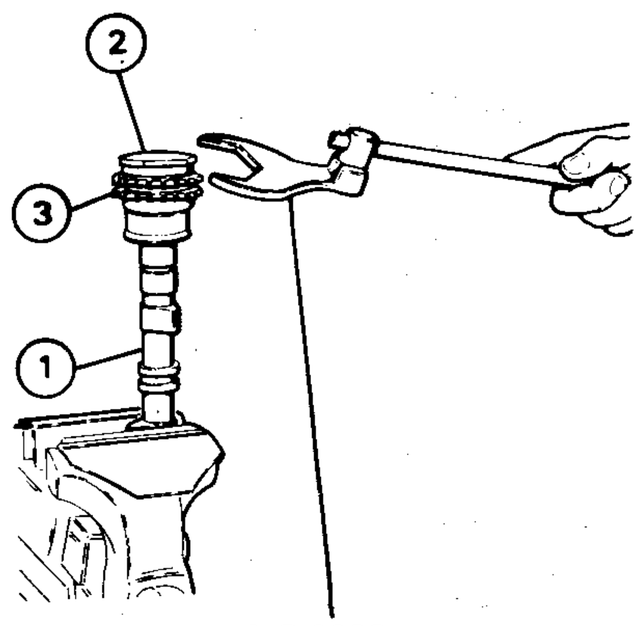

A.5.0232

1. Camshaft
2. Nut
3. Timing chain sprocket

b. Using tool **A.5.0274** unscrew whole timing variator (4) from camshaft.

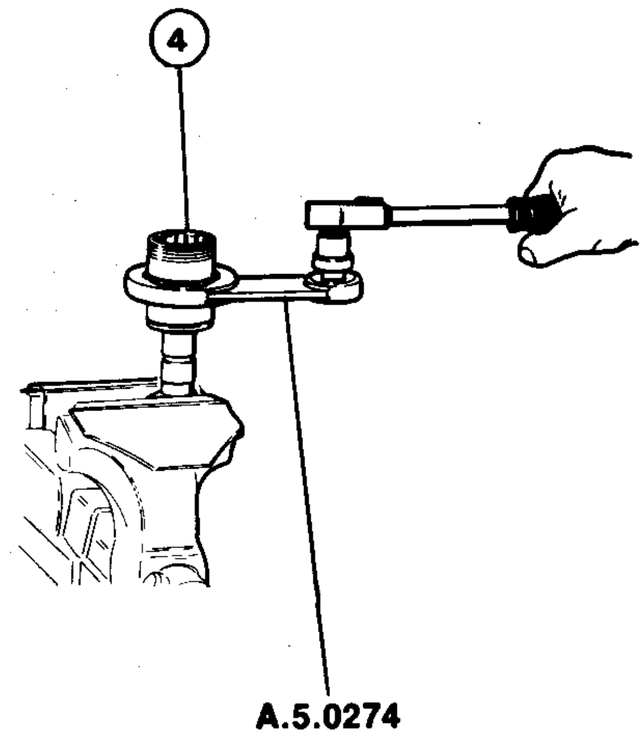

A.5.0274

4. Timing variator

c. Make control valve get in, blow compressed air into main duct and make sure timing variator turns.
If necessary, disassemble timing variator proceeding as hereinafter specified.

Timing variator disassembly

a. Using tool **A.5.0242** unscrew cover (5) with control valve.

CAUTION:
Cover is provided with left-hand thread.

EXHAUST-SIDE CAMSHAFT DISASSEMBLY

Disassemble exhaust-side camshaft removing the components in the sequence shown in the figure.

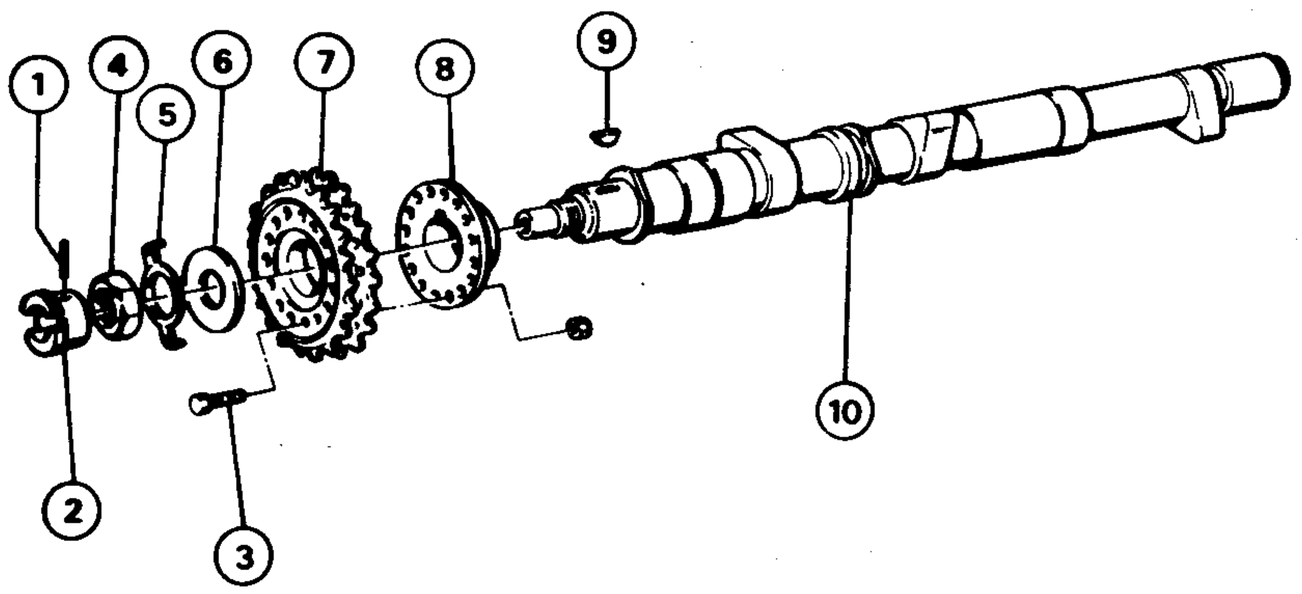

1. Tang securing pin
2. Distributor drive tang
3. Bolt
4. Nut
5. Lock
6. Washer
7. Timing chain sprocket
8. Flange
9. Key
10. Camshaft

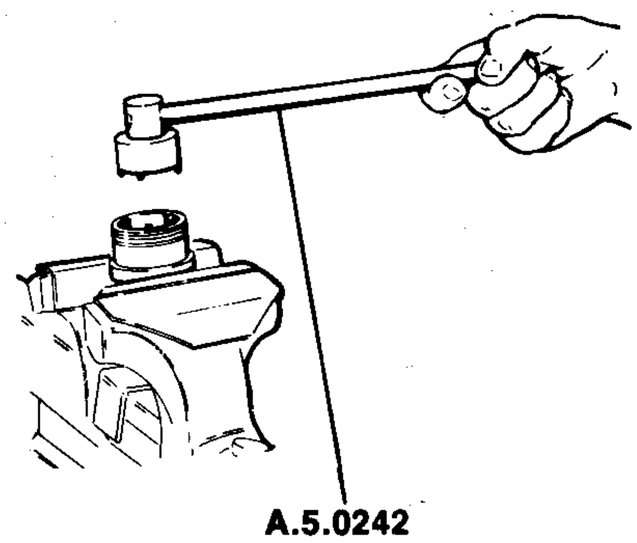

A.5.0242

b. Remove support (7), spring (8) and piston (9) from sleeve (6).

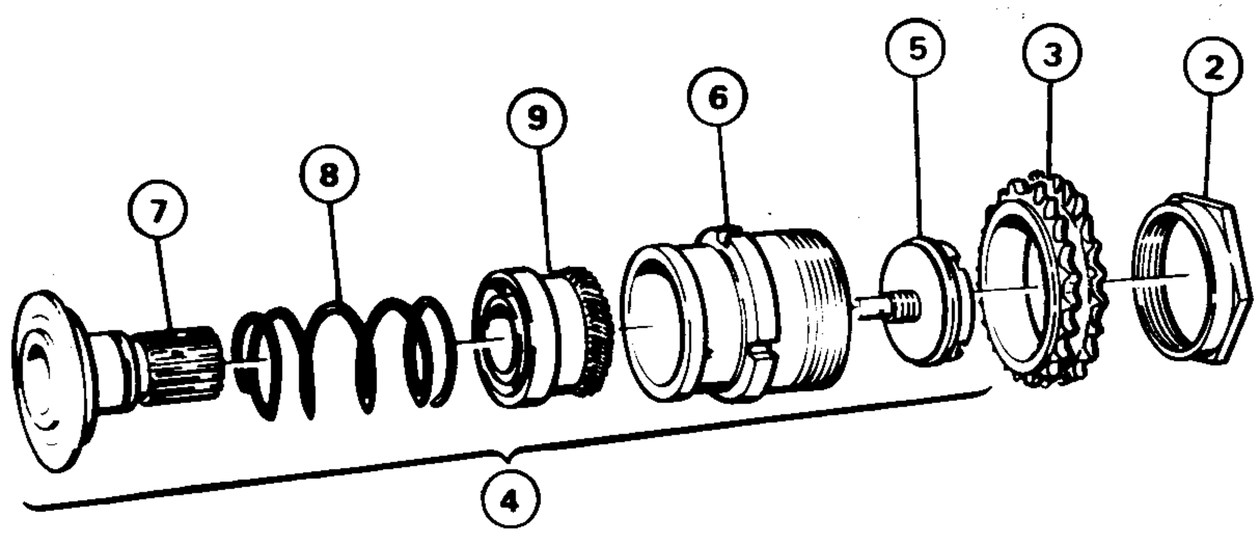

5. Cover
6. Sleeve
7. Support
8. Spring
9. Piston

ENGINE BLOCK DISASSEMBLY

COMPONENT REMOVAL

a. Remove oil filter (1).

b. Slacken nuts (2) and (3) and bolt (4); bring alternator (5) near engine and remove V-shaped (6).
Remove bolt (4) and nut (2) and then remove alternator complete with adjusting stirrup (7).

c. Remove nut (8) securing collar (9) of ignition distributor (10) to front cover.
The remove distributor (10).

d. Turn cogged pulley (11) till the phonic-wheel groove corresponds to screws (12) securing holder (13) of r.p.m. and timing sensor (14); remove screws (12) and holder (13) complete with sensor.

e. Proceed as specified in «Engine Block Component Removal» in relation to **4-cylinder engines** **1.6** **1.8** and **2.0**, **without considering steps b. and c.**

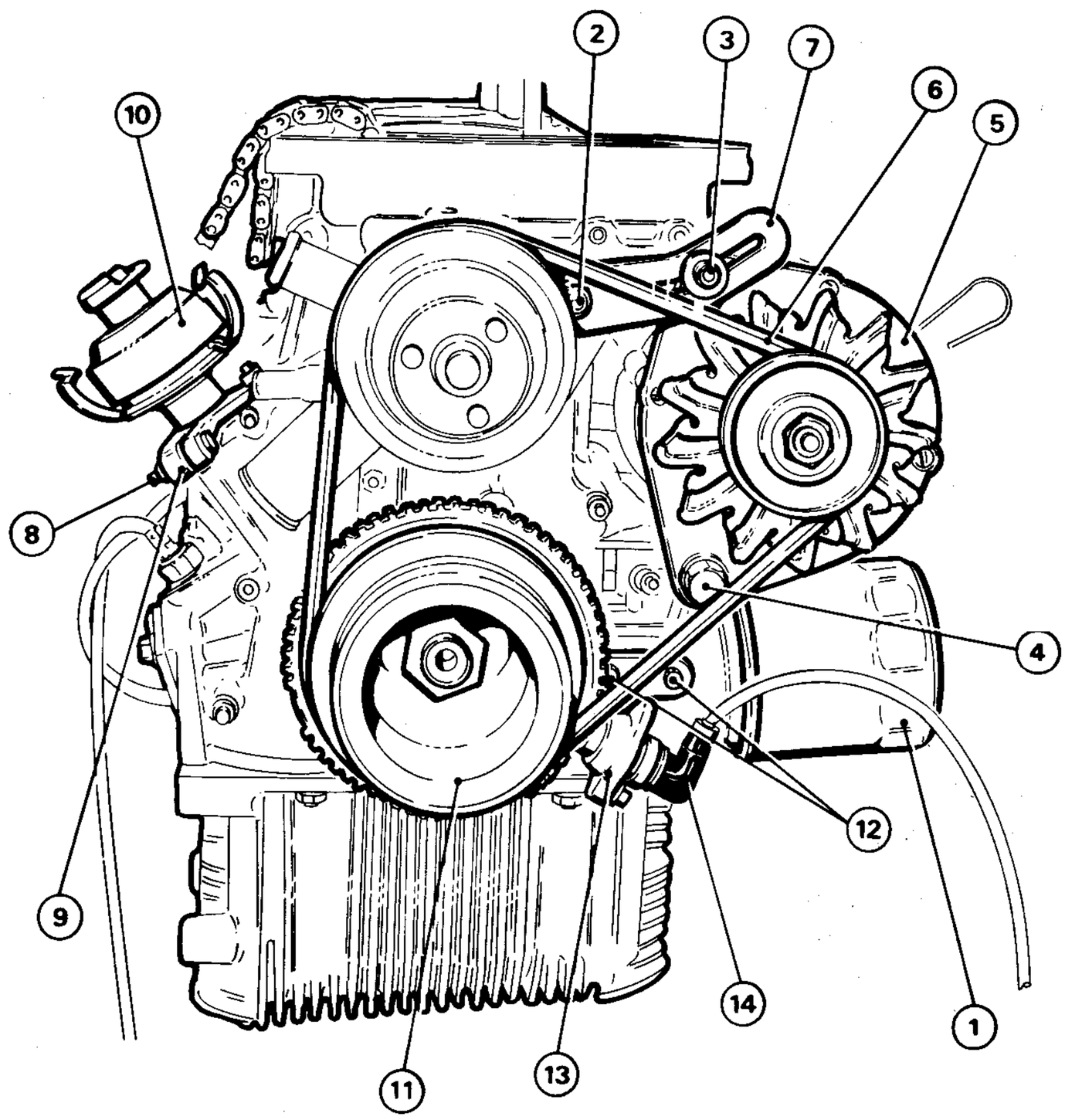

1. Oil filter
2. Stirrup securing nut
3. Belt tension adjusting nut
4. Alternator securing bolt
5. Alternator
6. Belt
7. Stirrup
8. Collar securing nut
9. Distributor collar
10. Ignition distributor
11. Cogged pulley
12. Sensor holder screws
13. Holder
14. R.p.m. and timing sensor

MAIN BEARING CAP AND CRANKSHAFT REMOVAL

Refer to relevant paragraph about **4-cylinder engines** **1.6** **1.8** and **2.0**.

WATER PUMP REMOVAL

Refer to relevant paragraph about **4-cylinder engines** **1.6** **1.8** and **2.0**.

CHECKS AND INSPECTION

CYLINDER HEAD AND VALVES

CYLINDER HEAD SEALING SURFACE INSPECTION

a. Thoroughly clean head surfaces using butyl acetate or methylethylketone to remove any gasket fragments.

b. Visually check head for cracks, burns, scuffing or excessive wear.

c. Check head sealing surface for warpage using a straightedge (1) resting on head sealing surface; use a feeler gauge (2) to measure warpage value.

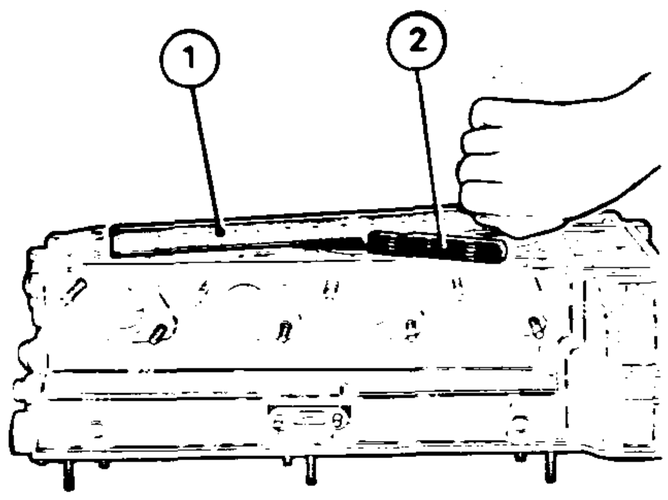

1. Straightedge
2. Feeler gauge

Maximum flatness error of cylinder head sealing surface: 0.05 mm (0.002 in)

d. In the event of excessive warpage, head must be refaced.

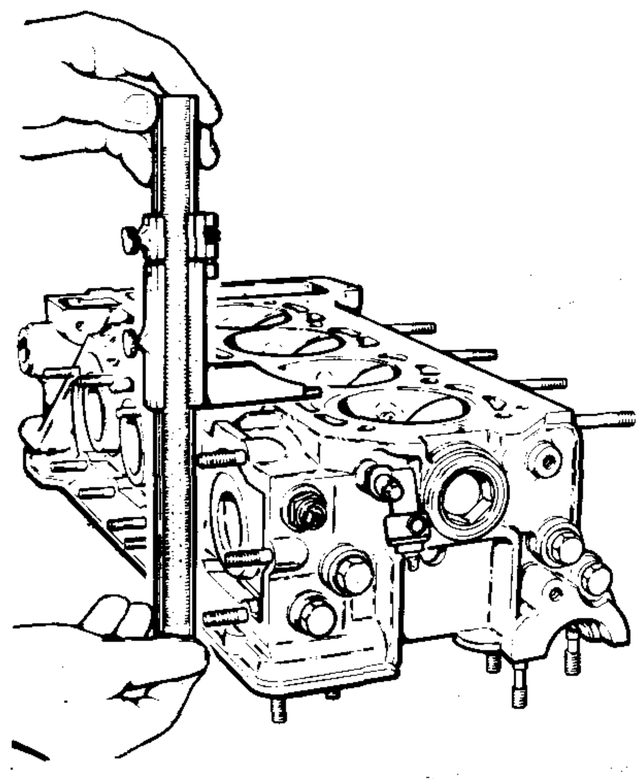

Minimum permissible cylinder head height after refacing: 134.5 mm (5.30 in)

CAUTION:
Don't machine head below minimum permissible thickness, otherwise severe engine damage may result.

e. Check finish of machined surface.

TAPPETS AND TAPPET HOUSING BORES

a. Check tappet housing bores using a bore gauge (1) and a dial indicator (2). Compare readings with dimensions and tolerances specified:

Tappet housing bore diameter (intake and exhaust valves)

Standard:	**35.000 to 35.025 mm (1.3780 to 1,3789 in)**
Oversize:	**35.200 to 35.225 mm (1.3858 to 1.3868 in)**

b. Check tappet skirt and head for signs of scuffing, score marks or excessive wear. Check diameter of tappet (3) using a micrometer and compare readings with dimensions and tolerances specified:

Tappet diameter (intake and exhaust valves)

Standard:	**34.973 to 34.989 mm (1.3769 to 1.3775 in)**
Oversize:	**35.173 to 35.189 mm (1.3848 to 1.3854 in)**

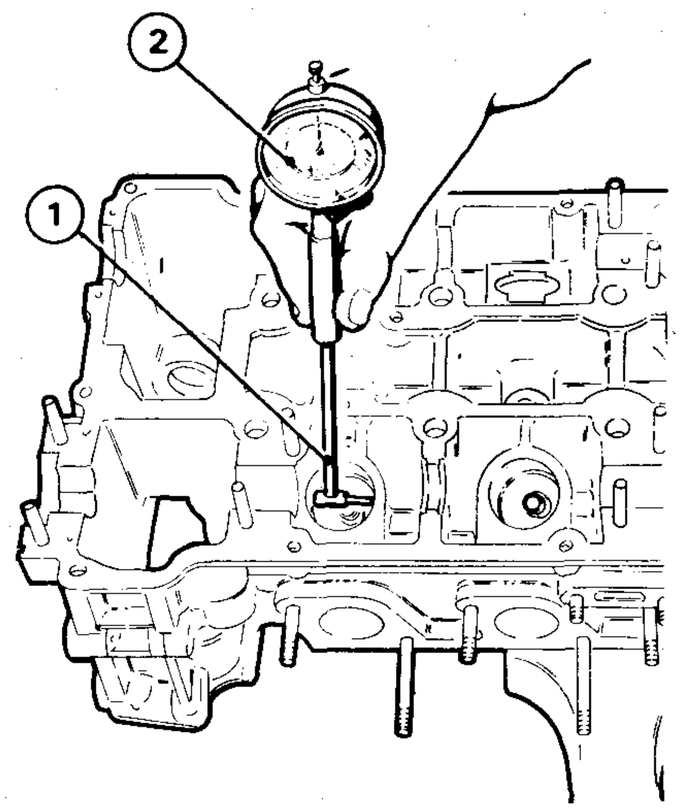

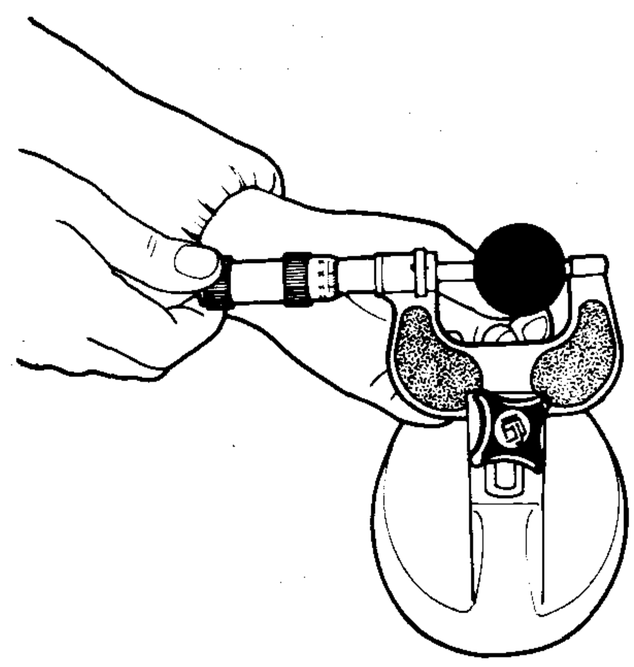

1. Bose gauge
2. Dial indicator
3. Tappet

CAMSHAFTS AND CAMSHAFT JOURNAL HOUSING BORES

a. Fit caps (1), lubricate nuts and tighten them to specified torque.

(T) : Tightening torque
Camshaft cap securing nuts
20 to 25 N·m
(2.0 to 2.5 kg·m
14.7 to 18.4 ft·lb)

b. Using a bore gauge (2) with a dial indicator (3) measure camshaft journal housing bore diameter.

Camshaft journal housing bore diameter:
27.000 to 27.033 mm
(1.0630 to 1.0643 in)

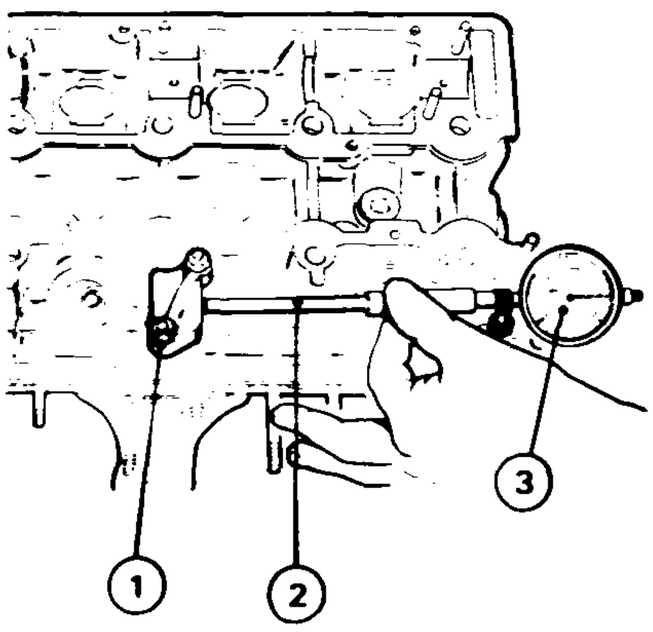

1. Caps
2. Bore gauge
3. Dial indicator

c. Using a gauge measure width «A» of camshaft journal shoulder.

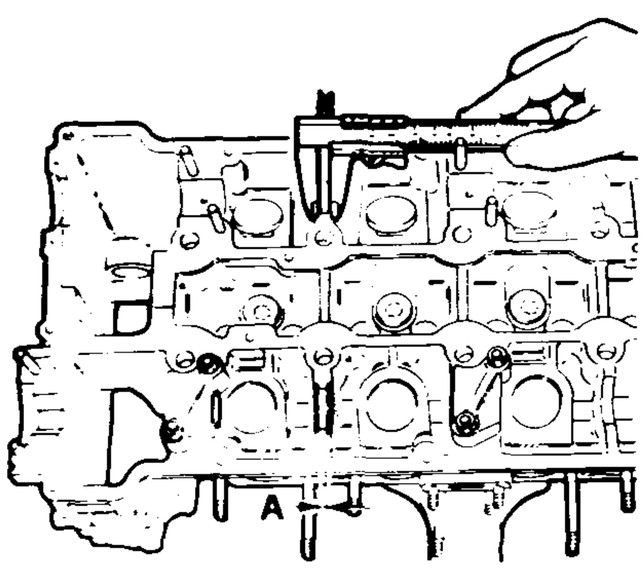

Camshaft journal shoulder width:
«A» = 7.898 to 7.920 mm
(0.3109 to 0.3118 in)

d. Check cam lobes and camshaft journals for score marks, scuffing, signs of overheating or excessive wear.

e. Measure camshaft journal diameter using an outside micrometer.
Check for out-of-round condition using a dial gauge.

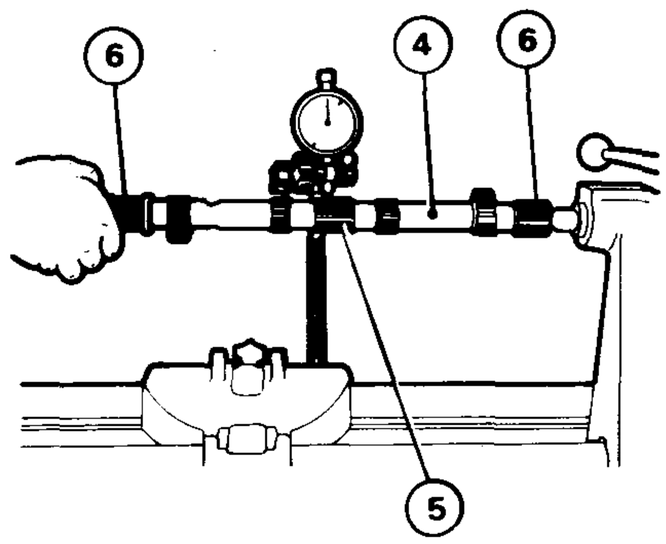

4. Camshaft
5. Center journal
6. End journals

Camshaft journal diameter:
26.959 to 26.980 mm
(1.0614 to 1.0622 in)

f. Check height of cam lobes using a dial indicator. Scrap and replace camshaft if height falls below requirements.

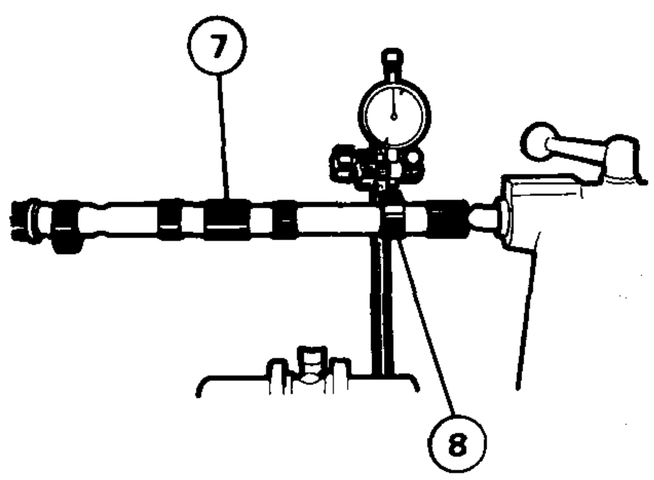

7. Camshaft
8. Cam

Minimum cam height:
Intake valve cam: 11 mm (0.43 in)
Exhaust valve cam: 9.5 mm (0.37 in)

g. Using a gauge measure camshaft shoulder width «B».

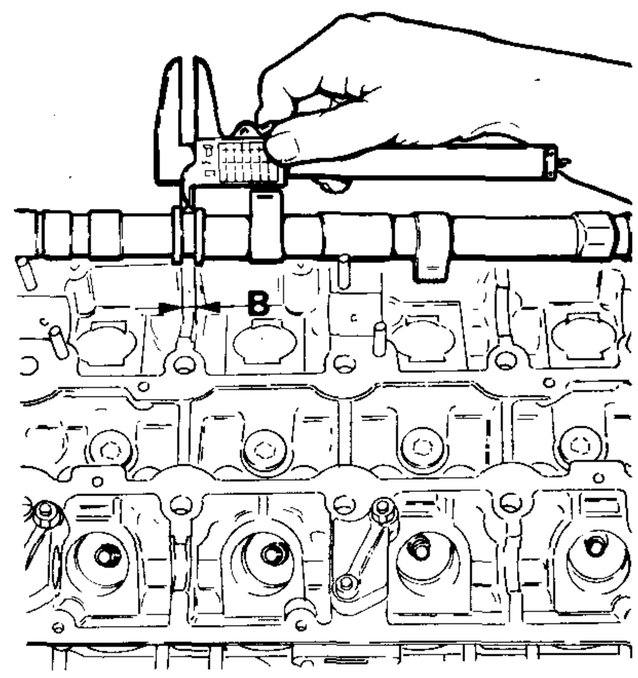

Camshaft shoulder width
«B» = 8.000 to 8.022 mm
(0.3150 to 0.3158 in)

VALVE SEATS REPLACEMENT

a. Check that the valve seats do not exhibit scoring, cracking or burning and that they are well-fitted in their respective seats on the cylinder head - if necessary replace them.

b. Withdraw the valve seats (1) using a suitable tool as illustrated in the figure.
Proceed as follows:

— fit and lock stop ring (3) and screw tap (4) (selected according to the diameter of the valve seat to be extracted) on mandrel (2);
— insert the group thus formed in the valve guide until screw tap (4) comes into contact with the valve seat (1);
— thread the valve seat by means of a spanner on the head of the mandrel until ring (3) touches the surface of the valve seat - then unscrew a half turn;
— tap the extremity of the mandrel to extract the valve seat.

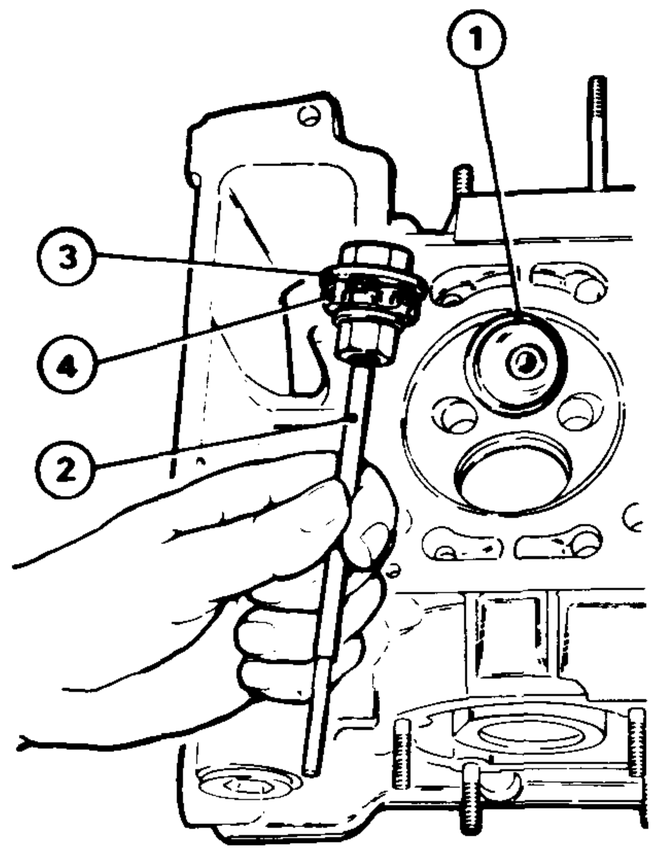

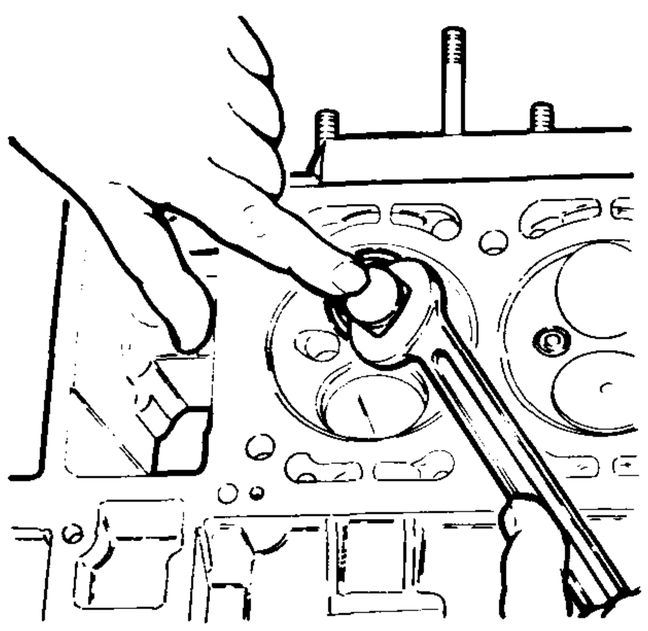

1. Valve seat
2. Mandrel for extraction
3. Stop ring
4. Screw tap for threading the valve seats to be extracted

c. Use a micrometer to measure the diameter of the new valve seat and a bore meter to measure that of the respective seat in the cylinder head to check the correct fitting interference.
Compare the values obtained with those given in the table.

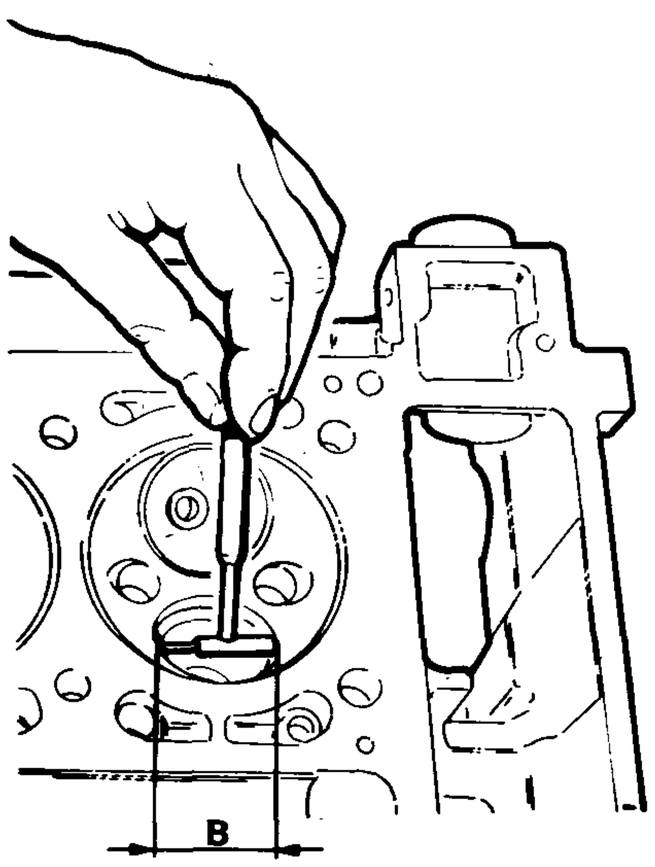

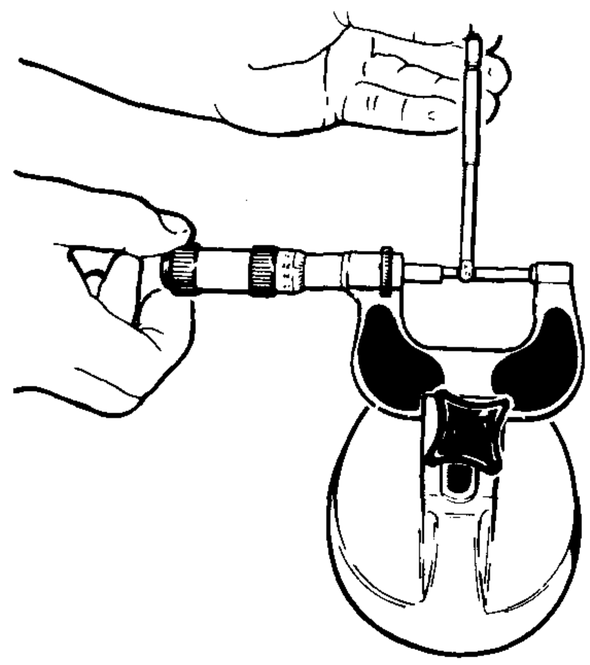

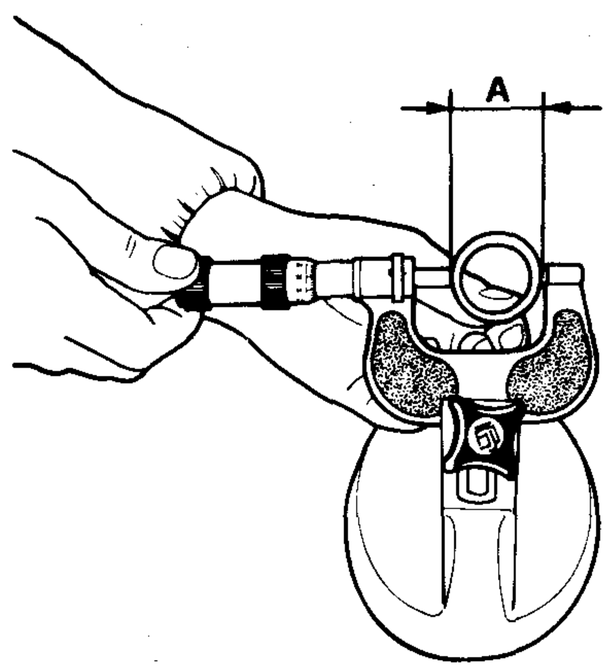

Valve seat insert O.D. «A» [mm (in)]		
Standard	i.	45.100 to 45.116 (1,7756 to 1,7762)
	e.	39.100 to 39.116 (1.5394 to 1.5400)
Oversize	i.	45.400 to 45.416 (1,7874 to 1.7880)
	e.	39.400 to 39.416 (1.5512 to 1.5518)
i. = intake valve		e. = exhaust valve

Insert housing bore O.D. «B» [mm (in)]		
Standard	i.	45.000 to 45.025 (1.7716 to 1.7726)
	e.	39.000 to 39.025 (1.5354 to 1.5364)
Oversize	i.	45.300 to 45.325 (1.7835 to 1.7844)
	e.	39.300 to 39.325 (1.5472 to 1.5482)
i. = intake valve		e. = exhaust valve

d. Pre-heat cylinder head in oven to 100°C (212°F).
e. Install valve seat inserts using tool **A.3.0622** as for intake valves and tool **A.3.0626** as for exhaust valves.

CHECKING VALVE GUIDES

Determine the clearance between **valve** guide and the stem.
If the clearance exceeds the permitted tolerance replace the worn parts.

a. **Determination of clearance**
— Using a micrometer measure the diameter of the valve stem in three places and in directions at right angles to each other.
— Using a bore gauge (1) measure the I.D. of the valve guide «**d**».

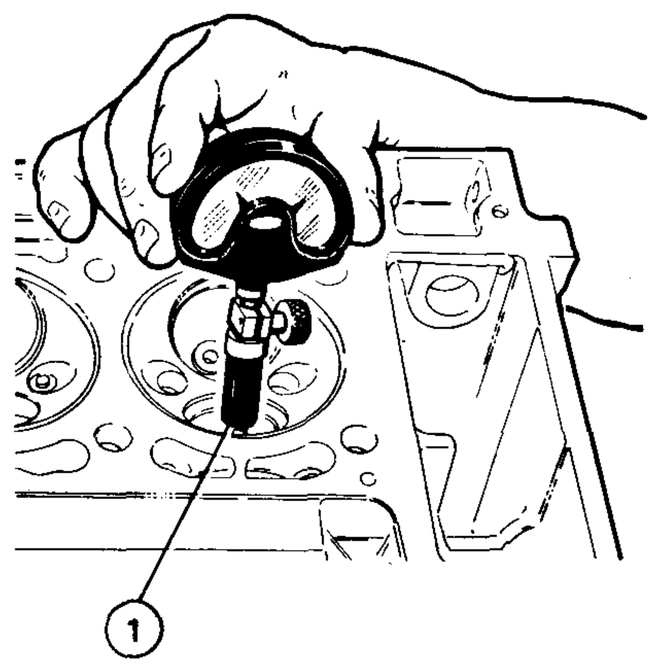

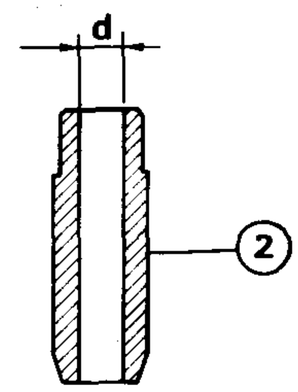

1. Bore gauge
2. Valve guide

Valve guide I.D. «d»
Intake: 8.000 to 8.025 mm (0.3150 to 0.3159 in)
Exhaust: 7.800 to 7.900 mm (0.3071 to 0.3110 in)

— Calculate the clearance, subtracting the maximum diameter of the valve stem from the I.D. of the valve guide.

Radial clearance between valve stem and valve guide I.D.:
Intake: 0.015 to 0.045 mm (0.0006 to 0.0012 in)
Exhaust: 0.040 to 0.070 mm (0.0016 to 0.0028 in)

b. Valve guide removal

— Visually check the valve guides, ensuring that there is no scoring or traces of seizing and that they have not undergone deformation or moved from mounting position.

— If necessary remove the worn valve guides using extracting tool **A.3.0311** as illustrated in the figure.

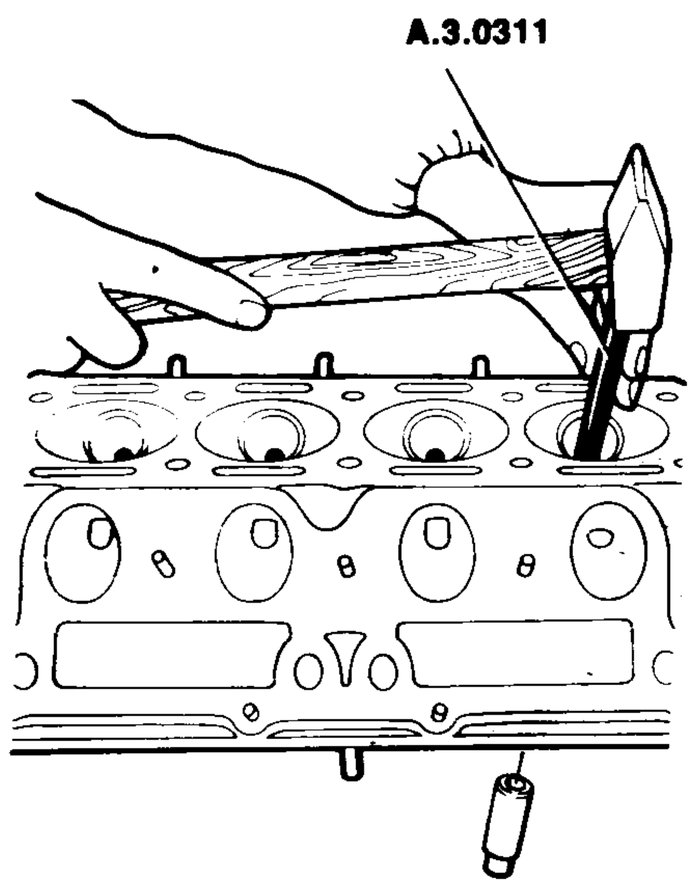

c. Insertion of the valve guide

— Check the I.D. of the valve guide seat and the O.D. of the new valve guide; the fitting interference should be within the prescribed limits (the values are valid for both intake and exhaust valves).

Valve guide seat diameter:
15.000 to 15.018 mm
(0.5906 to 0.5913 in)

Valve guide O.D.:
Intake: 15.047 to 15.058 mm
(0.5924 to 0.5928 in)
Exhaust: 15.064 to 15.082 mm
(0.5930 to 0.5938 in)

Valve guide/seat interference:
Intake: 0.029 to 0.058 mm
(0.0011 to 0.0023 in)
Exhaust: 0.046 to 0.082 mm
(0.0018 to 0.0032 in)

— Insert new valve guides using tool **A.3.0625**.
These tools ensure that the correct guide stand-out from the bottom spring cup abutment surface on cylinder head is maintained.

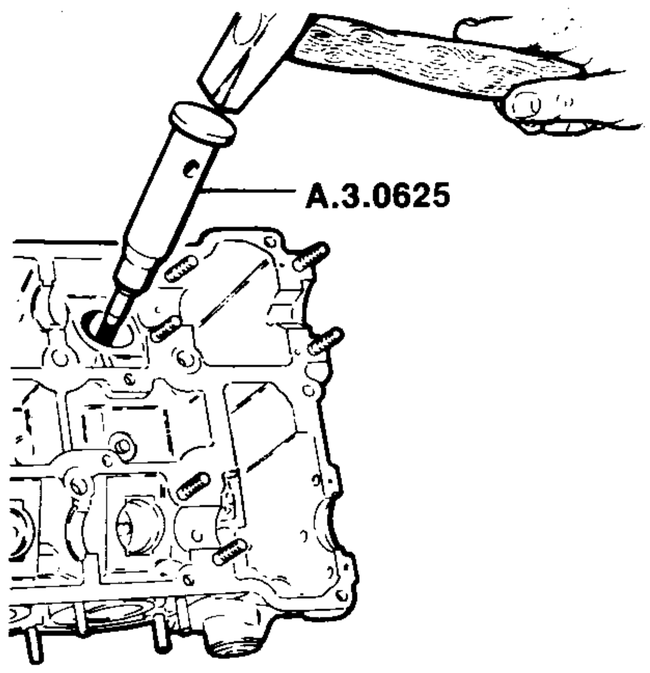

Valve guide stand-out
intake and exhaust:
9.850 to 10.150 mm
(0.3878 to 0.3996 in)

d. Valve guide reaming

— Ream valve guides to the specified diameter using a reaming tool, then measure valve guide I.D.

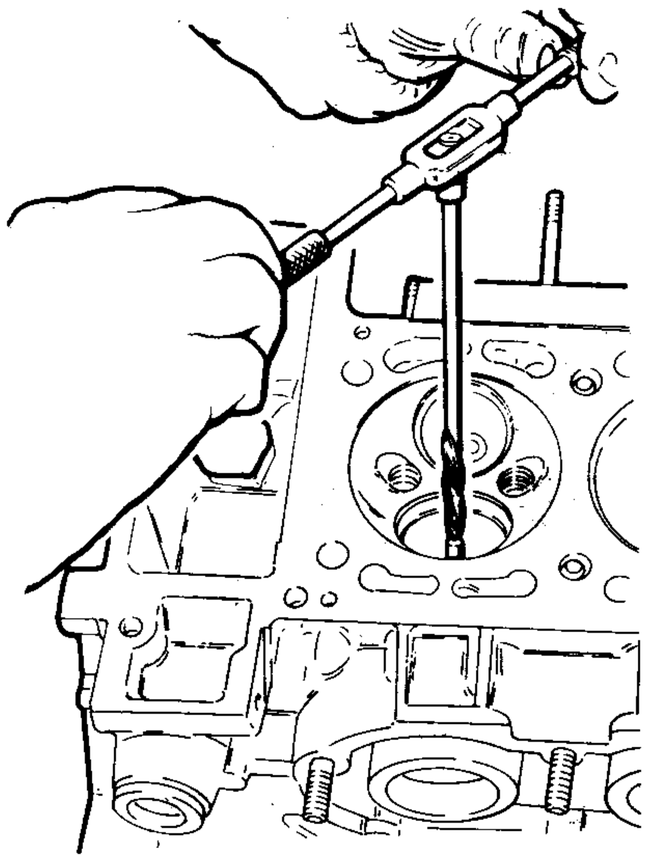

Valve guide I.D.:
Intake: 8.000 to 8.025 mm
(0.3150 to 0.3160 in)
Exhasut: 7.800 to 7.900 mm
(0.3071 to 0.311O in)

CHECKING VALVES AND VALVE SEATS

Check that the valves are not scored or burnt or do not exhibit mating marks (steps) with the corresponding seats on the cylinder head. Renew them if necessary.

a. If the valves are in good condition check the diameters of the stem and heads (which must be within the tolerances).

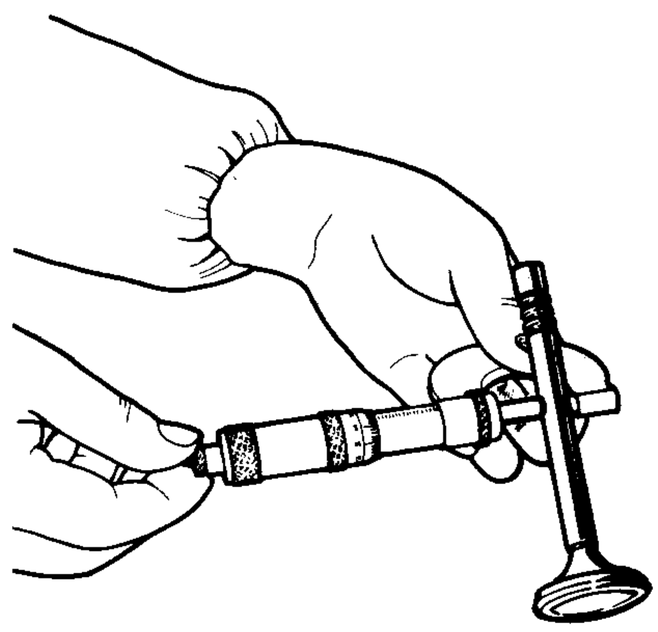

Valve stem diameter:
Intake: 7.970 to 7.985 mm
(0.3138 to 0.3144 in)
Exhaust: 7.945 to 7.960 mm
(0.3128 to 0.3134 in)

Valve head diameter (Eaton Livia type):
Intake: 43.850 to 44.000 mm
(1.7264 to 1.7323 in)
Exhaust: 37.850 to 38.000
(1.4901 to 1.4961 in)

b. If necessary, grind valve seats using suitable equipment.

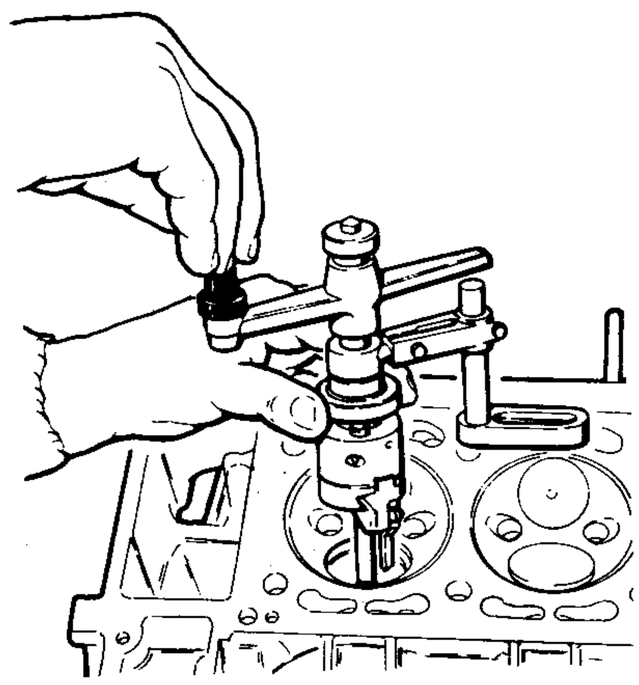

The angle of turning, which is identical for both intake and exhaust, should be:

Taper of intake and exhaust valve seats:
α = 90° ± 20'

NOTE:
Taper α is obtained with the tool of the portable lathe at 45°.

c. **After machining, grind each valve into** the associated seat using a suitable tool.

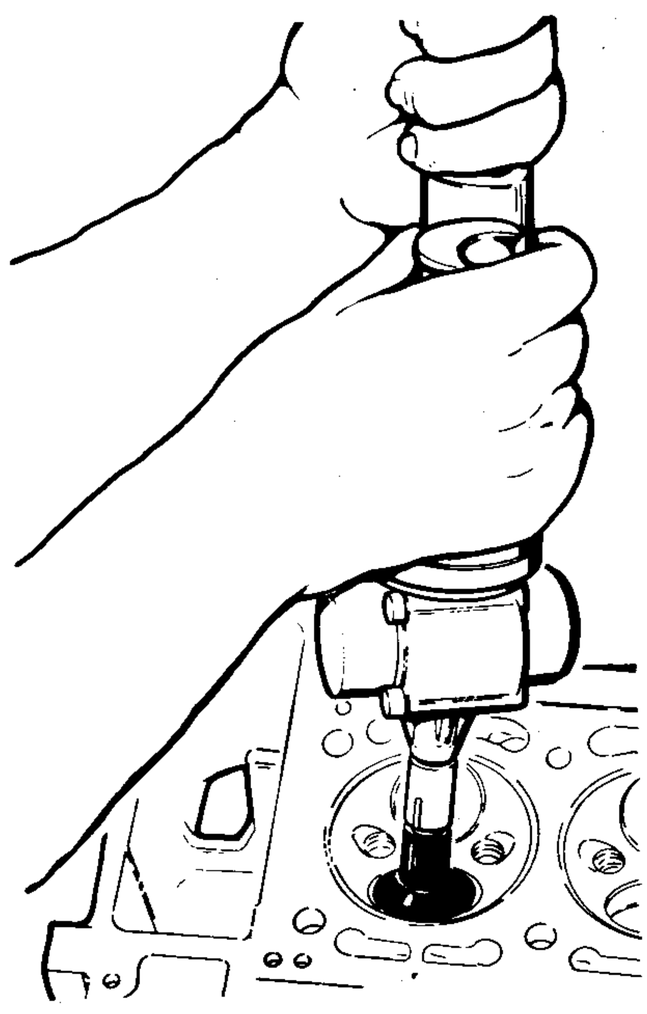

— When grinding valves and seats (use SIPAL AREXONS Carbosilicium abrasive paste , Part No. 4100-31502).
— Lubricate valve stems with engine oil.
— Thoroughly clean valves and seats using kerosene or solvent.

CHECKING VALVE SPRINGS

a. Carefully examine the valve springs and, if there are no signs of excessive wear or yielding, check that:

— the terminal turns must be parallel and perpendicular to the axis of the spring max. error **2°**;
— the lenght of the **«free»** springs corresponds to the following values;

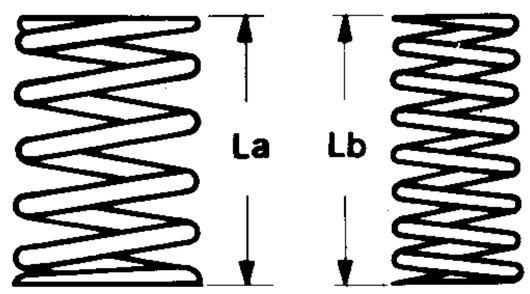

Length of free springs [mm (in)]		
External spring	La	48.7 (1.92)
Internal spring	Lb	46.2 (1.82)

— the flexibility values, measured by means of a dynamometer must be within the limits given in the table.

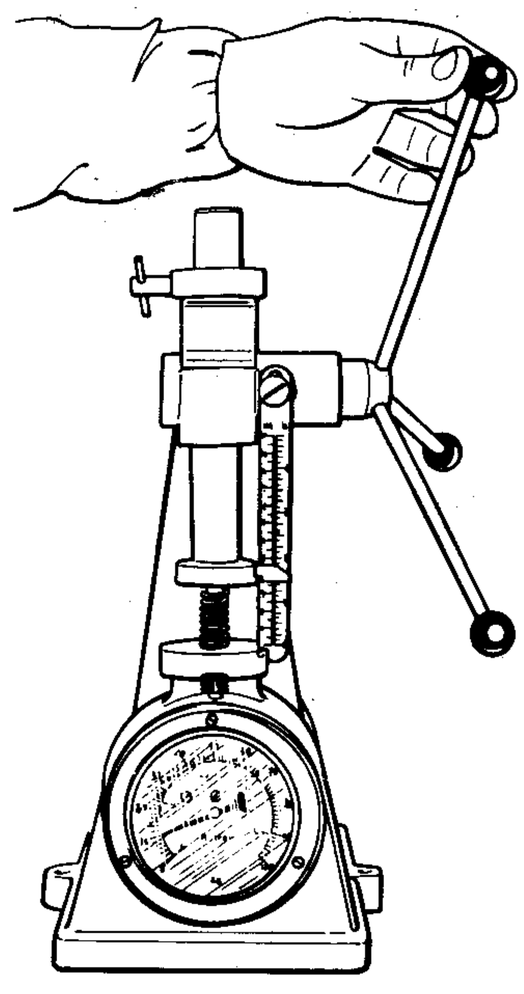

External spring		
Spring length	**mm (in)**	**Test force**
With valve closed	36.5 (1.4370)	21.57 to 22.43 kg (211.58 to 220.02 N) (47.554 to 49.450 lb)
With valve open	25.5 (1.0039)	46.10 to 47.90 kg (452.18 to 469.83 N) (101.633 to 105.601 lb)

Internal spring		
Spring length	**mm (in)**	**Test force**
With valve closed	34.5 (1.3583)	11.77 to 12.23 kg (115.44 to 119.95 N) (25.948 to 26.9625 lb)
With valve open	23.5 (0.9252)	24.87 to 25.73 kg (243.88 to 252.32 N) (54.829 to 56.725 lb)

TIMING VARIATOR

a. Make sure all oil ways are not clogged.
b. Check oil seal rings for efficiency.

ENGINE BLOCK

NOTE:
As for engine block tests and inspection, please refer to paragraph «Engine Block» concerning 4-cylinder engines 1.6 1.8 and 2.0, taking into account values and dimensions specified for engine 062.24.

ENGINE ASSEMBLY

CYLINDER HEAD ASSEMBLY

After inspecting as described above and replacing defective parts, assemble engine using the special purpose tools described during engine disassembly and the assembly tools indicated below.

a. Clamp support **A.2.0195** and fork **A.2.0196** in vice and install cylinder head on fork.

b. Install lower caps (1) and shims (2) on intake and exhaust valve guides.

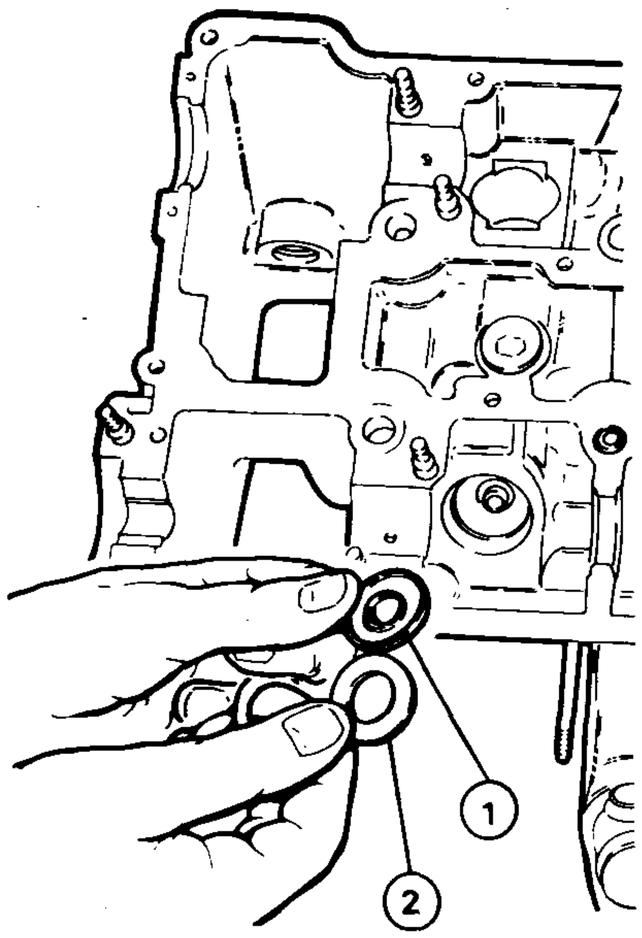

1. Lower caps
2. Shims

c. Fit oil grommets (3) to intake and exhaust valve guides using special tool **A.3.0469**.

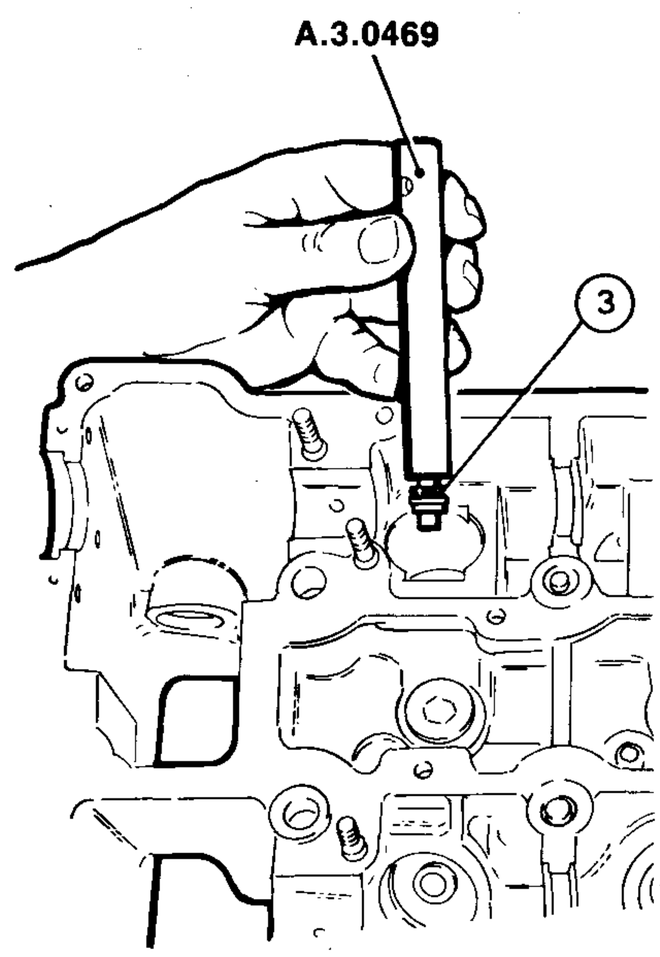

3. Oil grommets

d. Lubricate valve stems with clean engine oil, install valves in relevant guides and lock using tool **A.2.0192**.

e. Lock tool **A.2.0192** with special nut **A.2.0359** and install support **A.3.0522**.

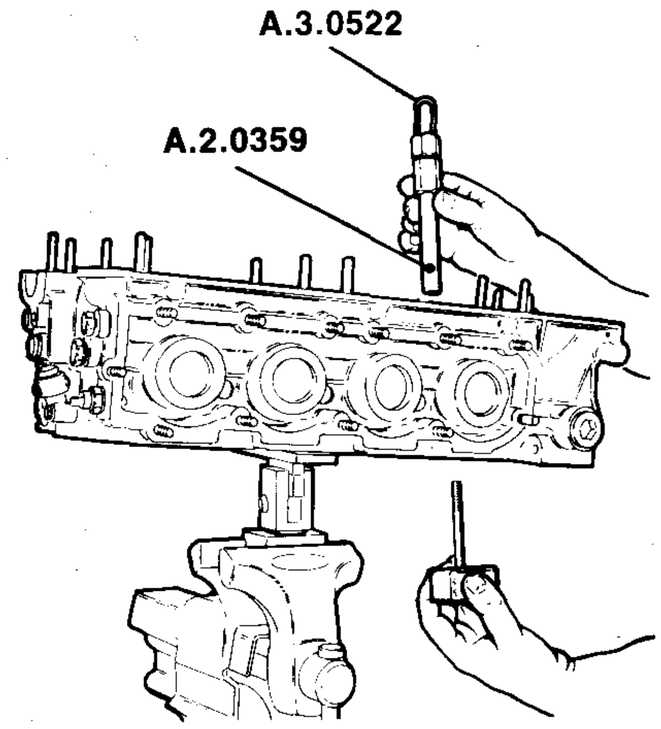

f. Insert inner springs (4), outer springs (5) and upper caps (6) over valve stems. **Damping coils of springs must face downward.**

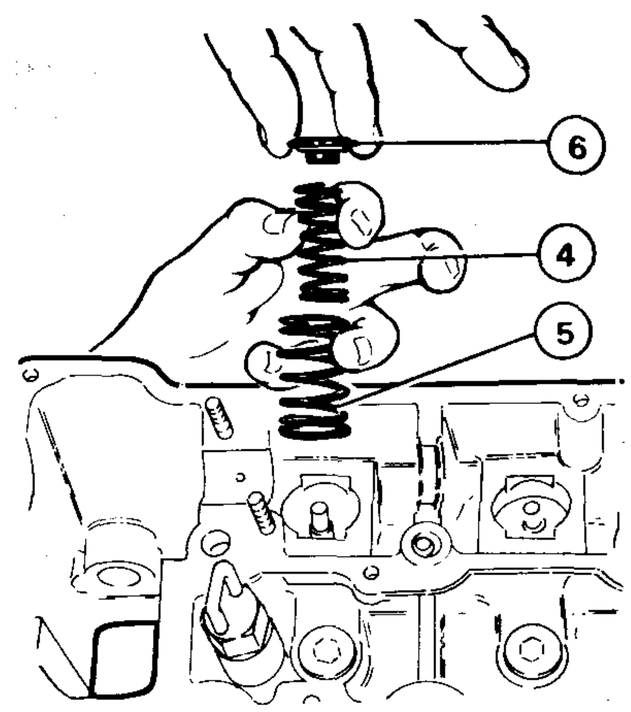

4. Inner springs
5. Outer springs
6. Upper caps

g. Fit lever **A.3.0324 with part A.3.0520** to tools previously mounted.
Through the lever compress springs and fit retainer locks in valve stem groove.

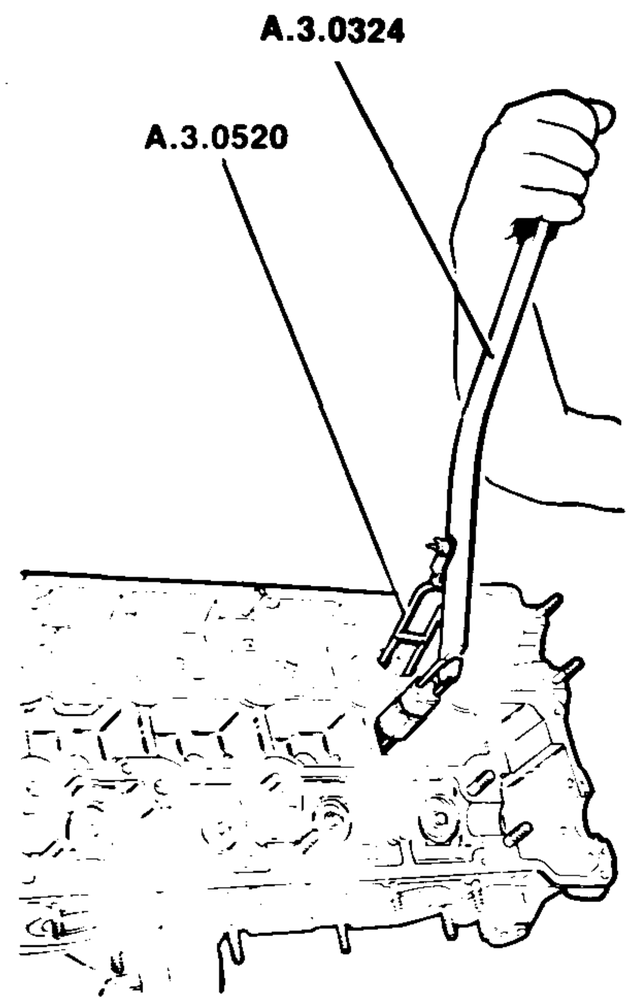

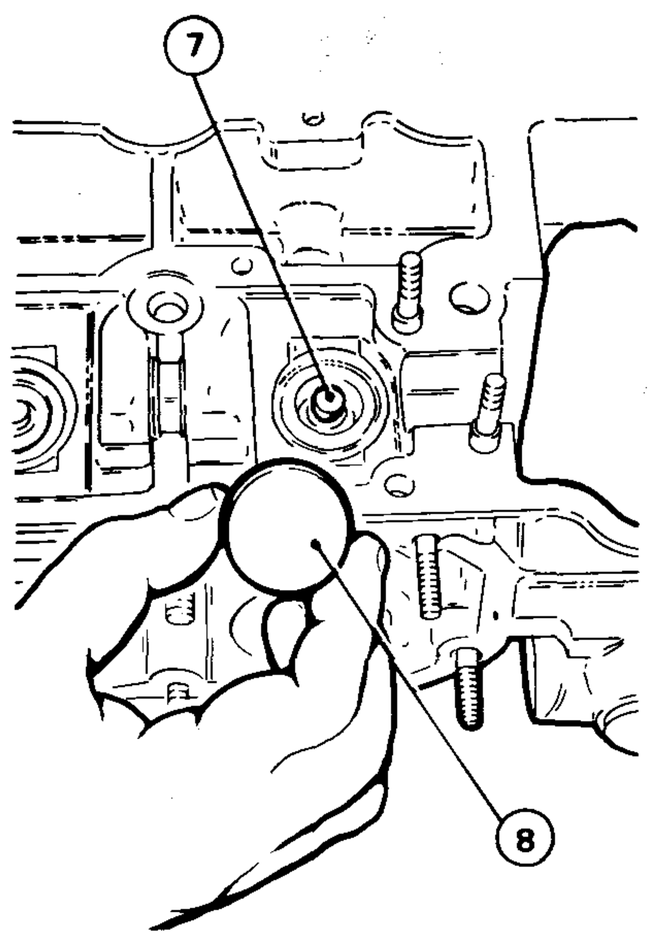

7. Valve tip caps
8. Tappets

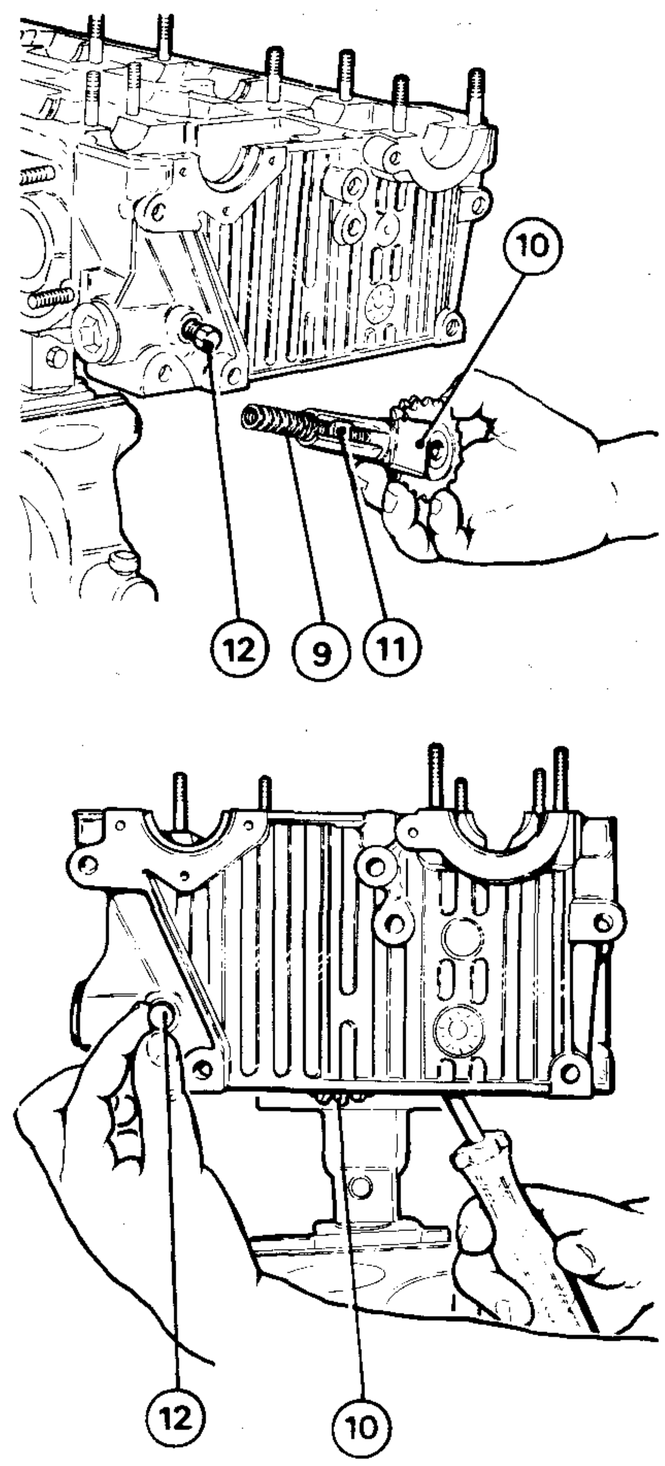

9. Spring
10. Chain tensioner
11. Securing plate
12. Securing screw

h. Valve leakage test

Install spark plugs in seats.

Pour enough fuel in a combustion chamber to barely cover the head of the valve under test.

Introduce air at low pressure into the intake and exhaust passages and check for air bubbles in the fuel.

If leakage is detected, check that valves are properly seated and repeat leakage test.

If leakage persists, regrind the valve seats as described under «Inspection - Valves and Valve Seats».

i. Install valve tip caps (7) ensuring that they are returned to their original positions.

Lubricate tappets (8) with clean engine oil and install in associated seats.

j. Grease spring (9) of chain tensioner (10) and insert it into tensioner; fit taper plate (11) on grooved seat of chain tensioner and install the assembly in its seat on cylinder head.

Start securing screw (12) and tighten making sure it corresponds to hole in tapper plate; proceed as shown in the picture.

k. **Exhaust-side camshaft assembly**

Re-assemble exhaust-side camshaft installing the components in the sequence shown in the picture.

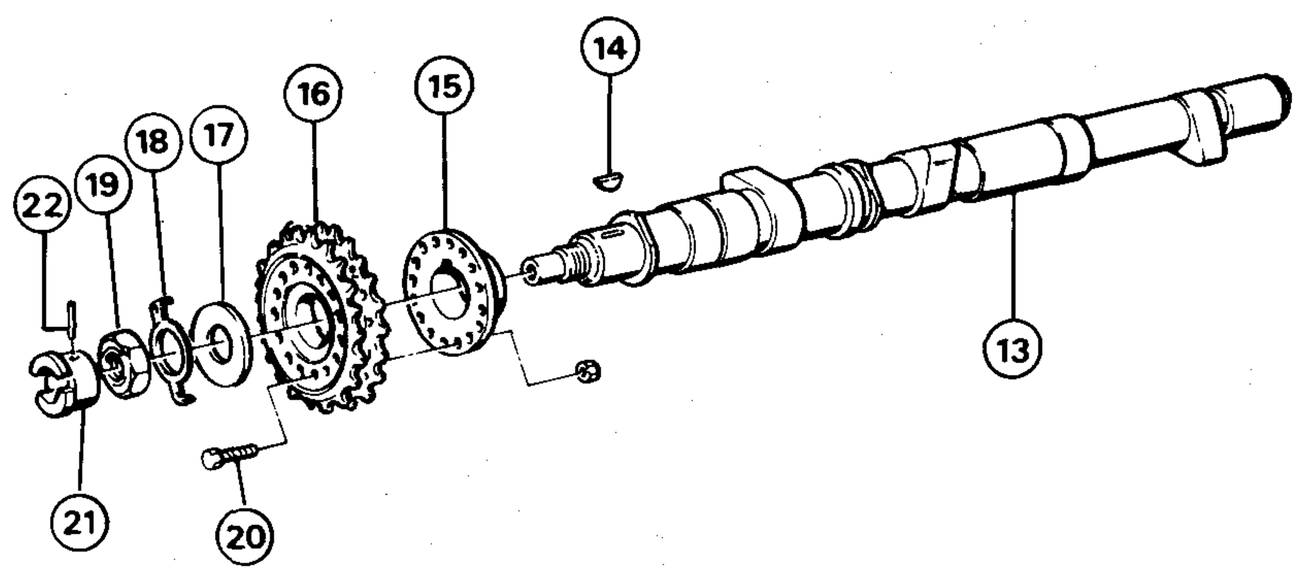

13. Camshaft
14. Key
15. Flange
16. Timing chain sprocket
17. Washer
18. Lock
19. Nut
20. Bolt
21. Distributor drive tang
22. Tang securing pin

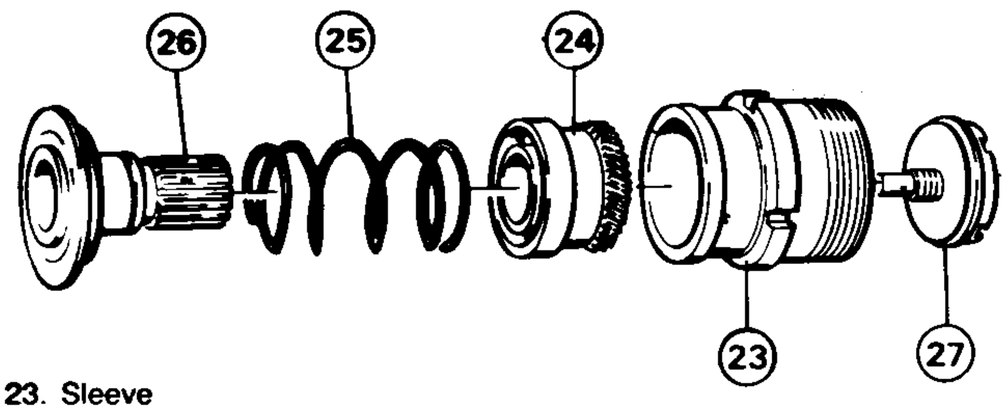

23. Sleeve
24. Piston
25. Spring
26. Support
27. Cover

I. Intake-side camshaft assembly

1. Timing variator assembly

— Install piston (24), spring (25) and support (26) into sleeve (23).

— Screw cover (27) on sleeve and tighten to specified torque using tool **A.5.0242**.

CAUTION:
Cover is provided with left-hand thread.

(T) : Timing variator cover tightening torque
59 N·m (6 kg·m; 43.5 ft·lb)

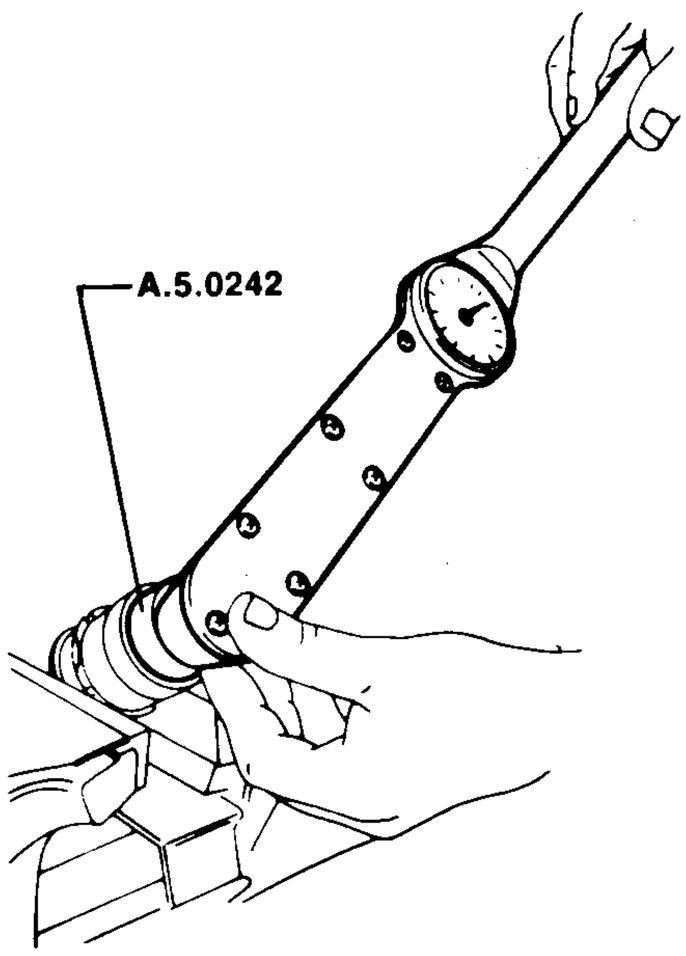

— Fit variator on shaft using wrench **A.5.0274** and tighten to specified torque.

(T) : Timing variator tightening torque
98 to 118 N·m
(10 to 12 kg·m
72.2 to 87.1 ft·lb)

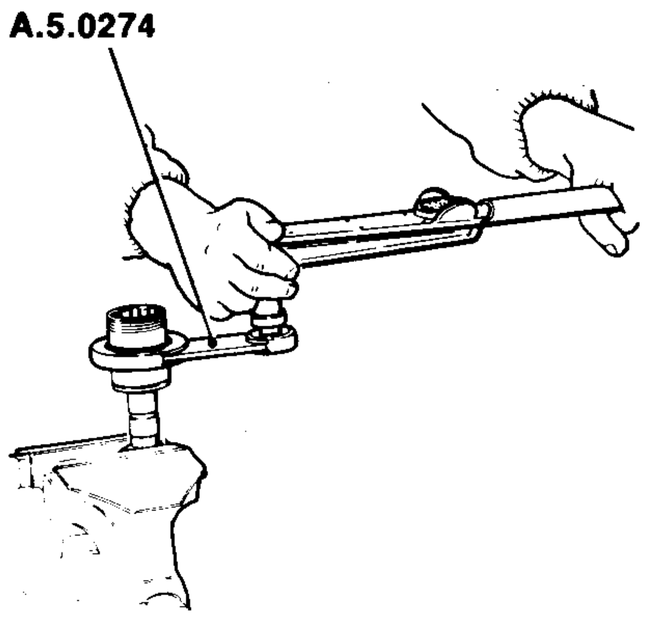

2. Installation of timing variator on camshaft

— Smear camshaft thread with Loctite sealing compound.

CAUTION:
Take care that sealing compound does not obstruct oil ways.

— Fit sprocket (28) and tighten nut (29).

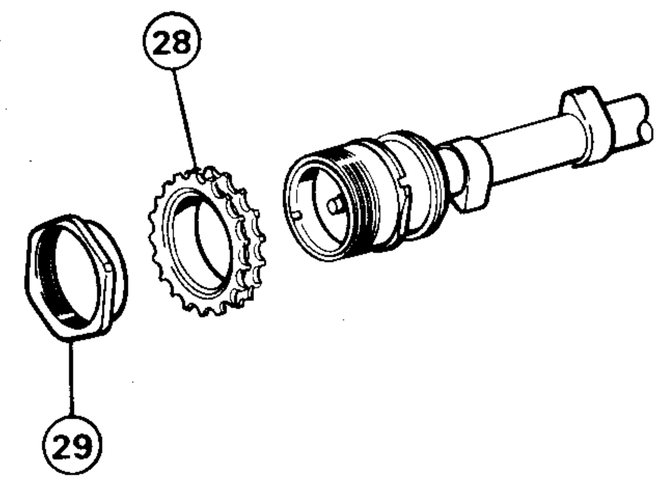

28. Timing chain sprocket
29. Nut

CAUTION:
- **Nut shall be tightened in such a way that sprocket (28) is free.**
- **Wait about six hours before installing shaft on cylinder head.**

m. Using clean engine oil, lubricate camshaft journals and housings on cylinder head; then install shafts.

n. Position caps (30) in numerical order (numbers are marked on caps). Lubricate nuts and washers and tighten to specified torque. Then install rear journal (31) of exhaust-side camshaft and dust gasket (32).

(T) : Tightening torque
Camshaft cap nuts (wet)
20 to 25 N·m
(2 to 2.5 kg·m
14.7 to 18.4 ft·lb)

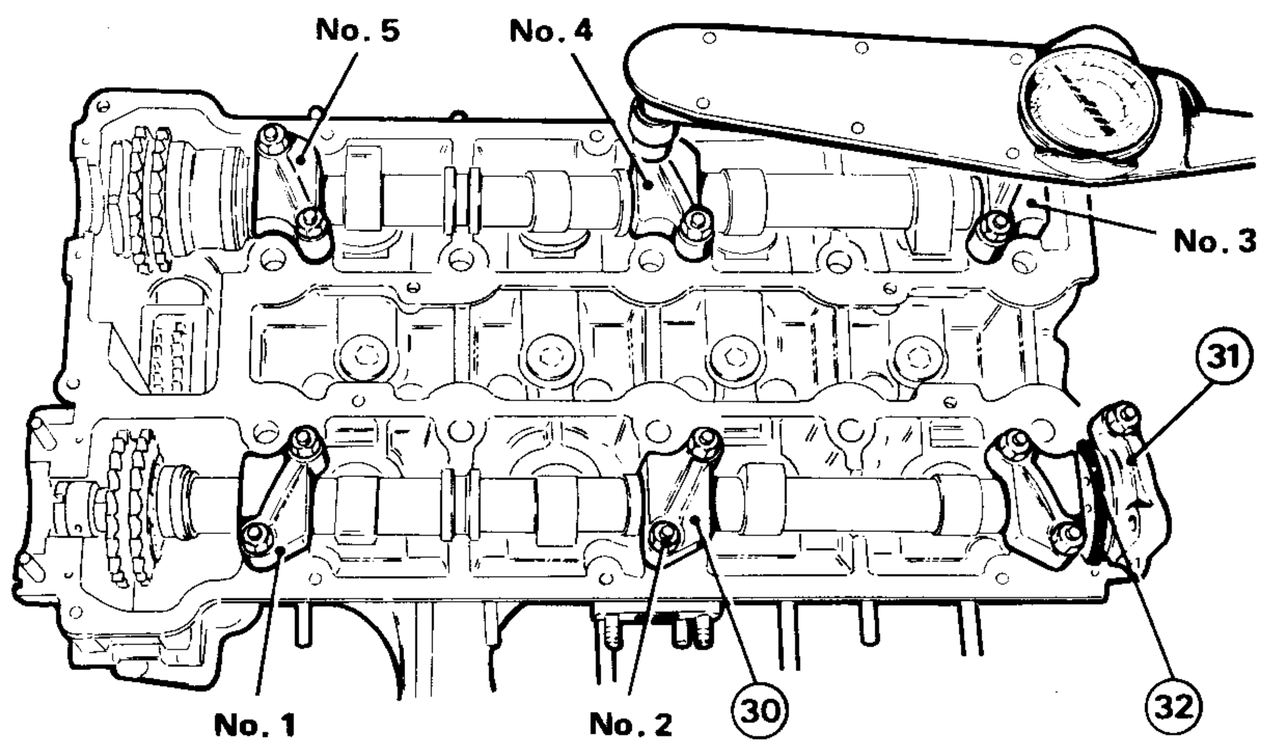

30. Camshaft caps
31. Rear journal
32. Dust gasket

o. Using a dial gauge measure camshaft end float; make sure the value is within the tolerance range.

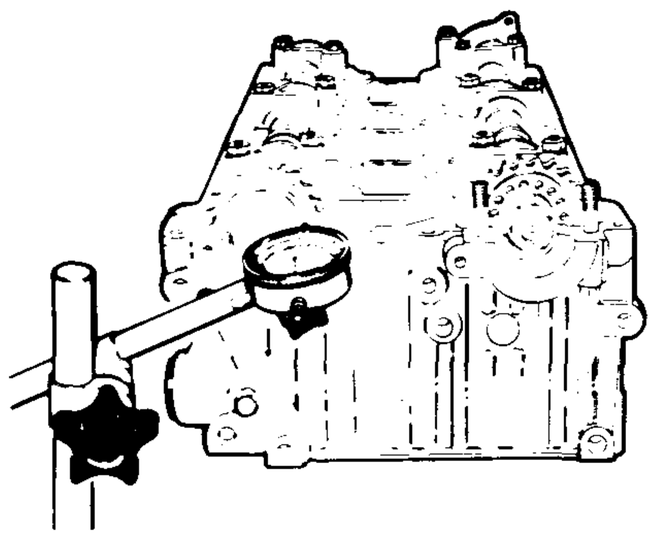

Camshaft end float:
0.080 to 0.124 mm
(0.0032 to 0.0049 in)

p. Using feeler gauge **C.6.0197**, check clearance between cam heel radius and tappet head against specifications; if necessary, replace valve tip cup with another one having thickness required. Use a suitable gauge to check valve tip cup thickness.

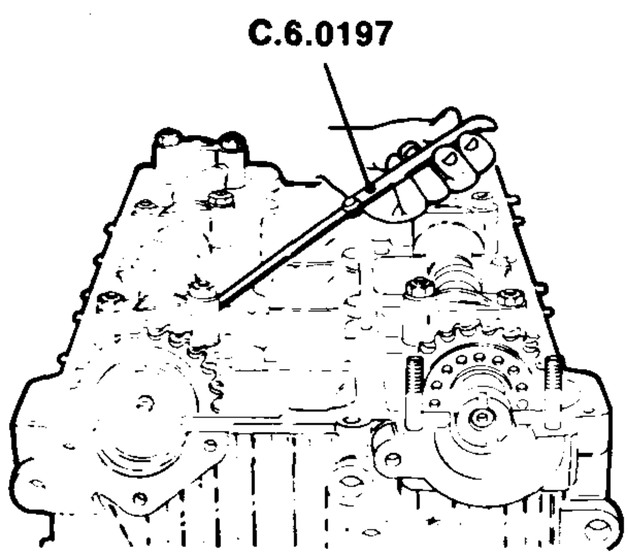

Valve clearance:

Intake:	**0.400 to 0.450 mm**
	(0.0157 to 0.0177 in)
Exhaust:	**0.450 to 0.500 mm**
	(0.0177 to 0.0197 in)

q. Install front journal (33) of exhaust-side camshaft, dust gasket (34) and then ignition distributor (35) without locking it.

r. Install solenoid (36) of timing variator complete with support (37) and thermostat bracket (38).

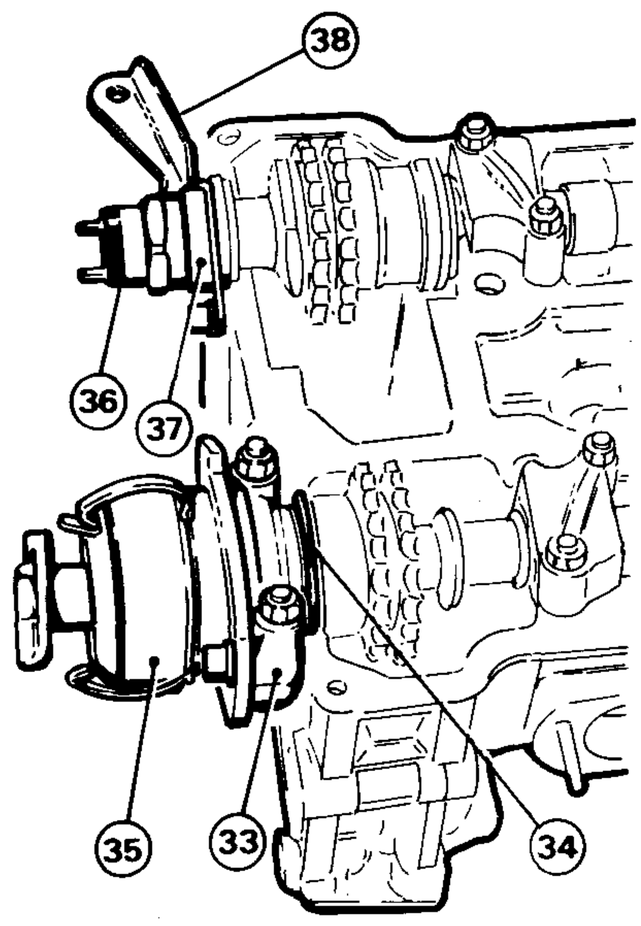

33. Front journal
34. Dust gasket
35. Ignition distributor
36. Solenoid
37. Solenoid support
38. Thermostat bracket

CAUTION:
Adjust position of solenoid in its support so that distance «A» between timing variator control valve and moving core of solenoid is 0.1 to 0.4 mm (0.0039 to 0.0157 in).

s. *Tighten securing nut to specified torque.*

(T) : Tightening torque
Solenoid securing nut
12.7 to 14.7 N·m
(1.2 to 1.4 kg·m
9.4 to 10.8 ft·lb)

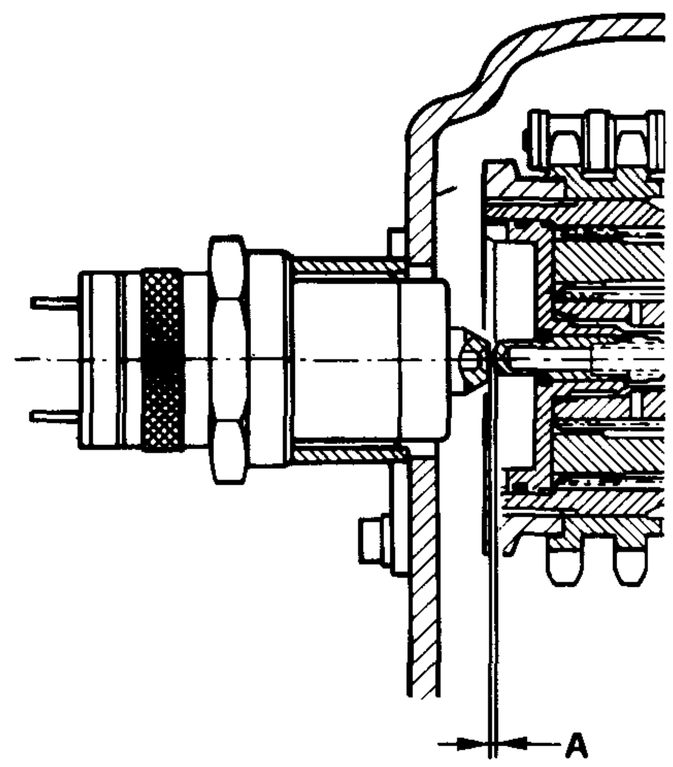

t. If a new cylinder head is used, restore timing marks on centre camshaft caps using tool **A.4.0199** with plate **A.4.0221**.

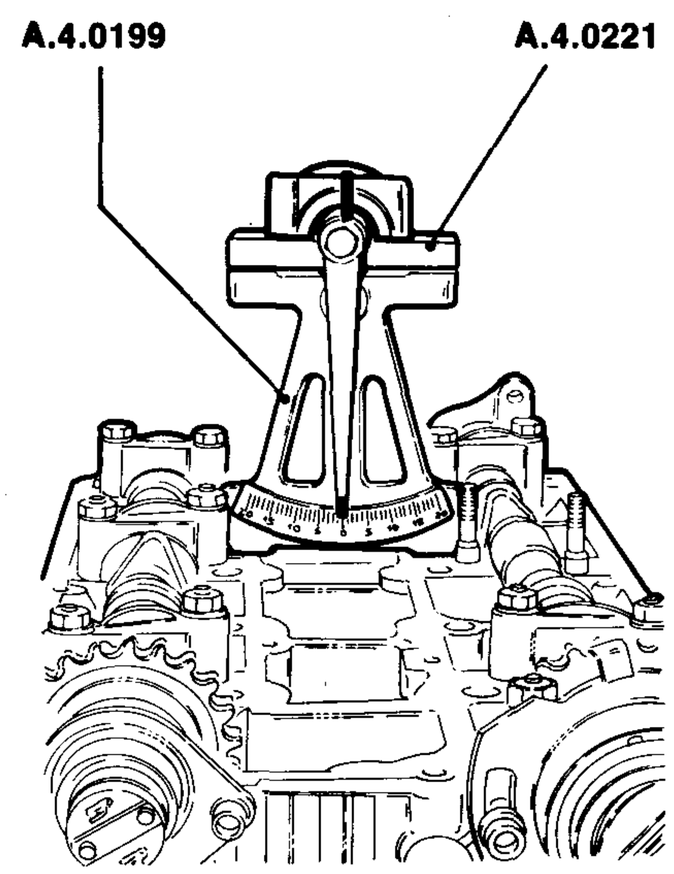

Angular reference value on centre camshaft caps:

Intake:	**+2°40'**
Exhaust:	**—13°15'**

ENGINE BLOCK ASSEMBLY

CRANKSHAFT

Refer to relevant paragraph about **4-cylinder engines** **1.6** **1.8** and **2.0**.

CYLINDER LINER, PISTON AND CONNECTING ROD INSTALLATION

Refer to relevant paragraph about **4-cylinder engines** **1.6** **1.8** and **2.0**.

TIMING DRIVE IDLER GEAR INSTALLATION

Refer to relevant paragraph about **4-cylinder engines** **1.6** **1.8** and **2.0**.

FRONT COVER ASSEMBLY

Refer to relevant paragraph about **4-cylinder engines** **1.6** **1.8** and **2.0**, **without considering steps c. and d.**

FRONT COVER INSTALLATION

a. Turn crankshaft till piston No. 1 is at T.D.C.

b. Position front cover complete with subassemblies for installation on block.

c. Fit metal oil seal into crankshaft hole on inside of front cover and hold in place with grease.

Key way should be apploximately aligned with corresponding key way on crankshaft.

d. Install seal ring (1) on cover and gaskets (2) on block.

e. Fit front cover (3) over engine block studs (4).

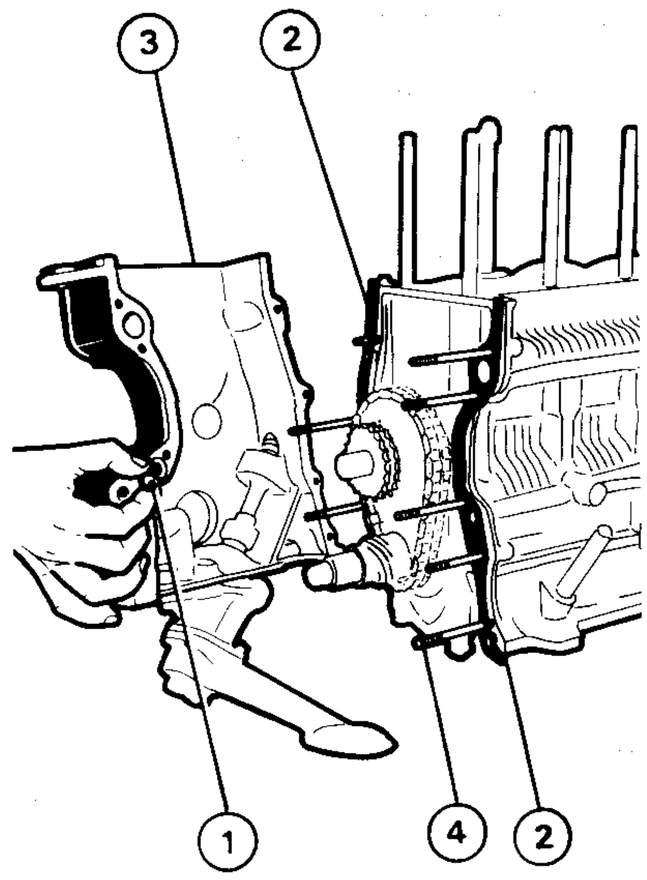

1. Seal ring
2. Gaskets
3. Front cover
4. Studs

f. Turn oil pump drive shaft so that when oil pump/crankshaft gears are meshed, further rotation leads to the position of ignition-distributor drive groove on oil pump tang shown in the following picture.

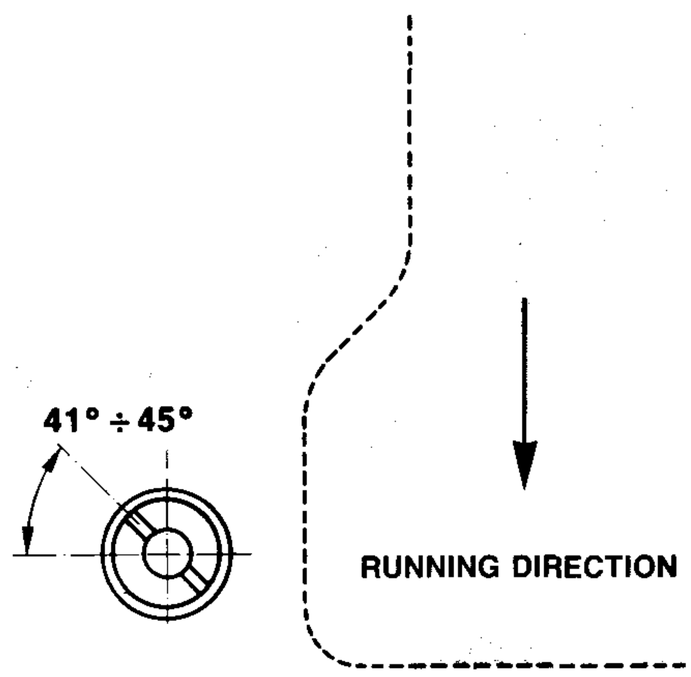

g. Fix front cover to engine block, tightening nuts with washers to specified torque.

(T) : **Tightening torque**
Nuts securing front cover to engine block
14 to 22 N·m
(1.36 to 2.25 kg·m
10.3 to 16.2 ft·lb)

h. Install distributor in front cover, making sure that driving coupling meshes with groove of oil pump tang.

i. Correctly position distributor turning it till reference notch on skirt edge is positioned as shown in the picture.

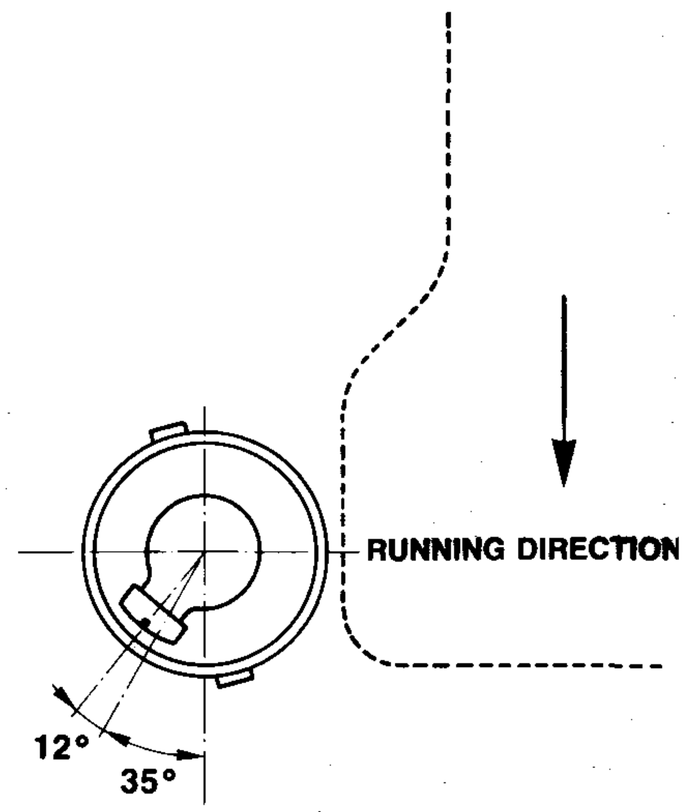

A = Turning brush
B = Reference notch (1st cylinder)

j. Lock distributor in this position through collar.

PULLEY INSTALLATION

a. Lubricate seal (1), using engine oil for outer surface and ISECO (Part No. 3671-69841) for the lip.

b. Using tool **A.3.0146**, install seal (1) on crankshaft.

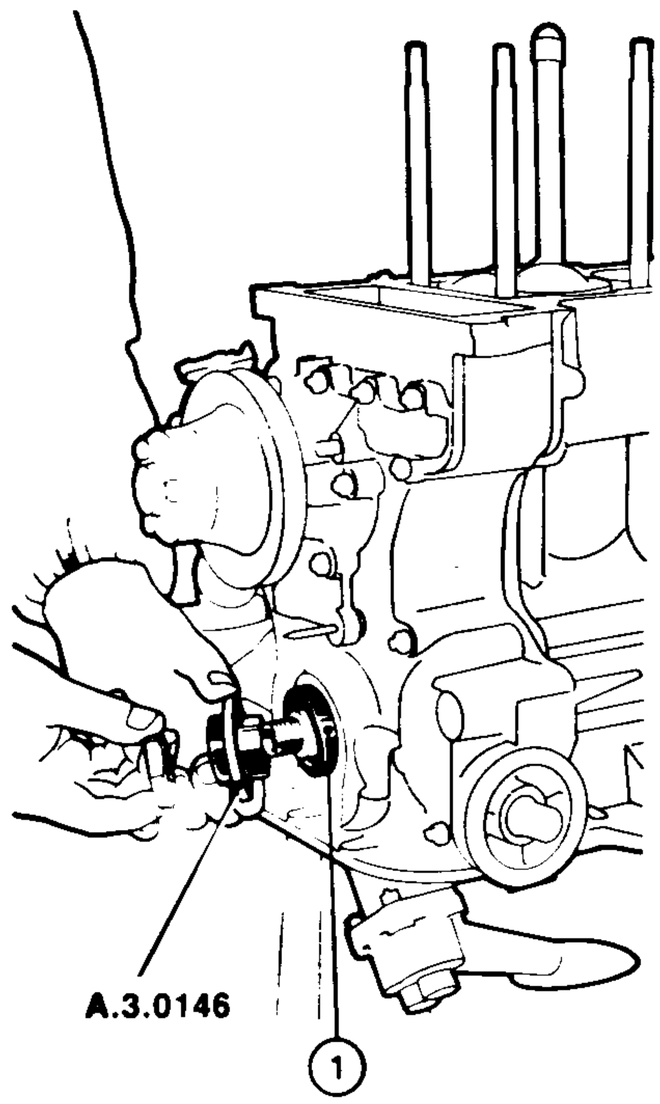

1. Seal

c. Block flywheel using tool **A.2.0145**.
d. Lubricate pulley bore and install pulley (2) on crankshaft.
e. Install lockwasher, lubricate nut with oil and tighten to the specified torque using a suitable tool.
f. Bend over lockwasher tab and remove tool **A.2.0145**.

(T) : Tightening torque
Pulley nut
187 to 195 N·m
(19 to 20 kg·m
138 to 144 ft·lb)

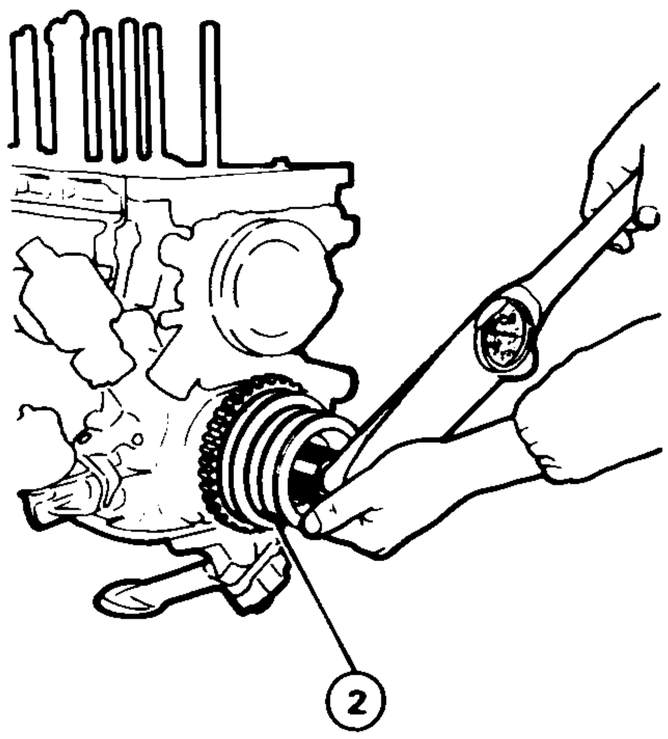

2. Crankshaft pulley

OIL PAN INSTALLATION

Refer to relevant paragraph about **4-cylinder engines** **1.6** **1.8** and **2.0**.

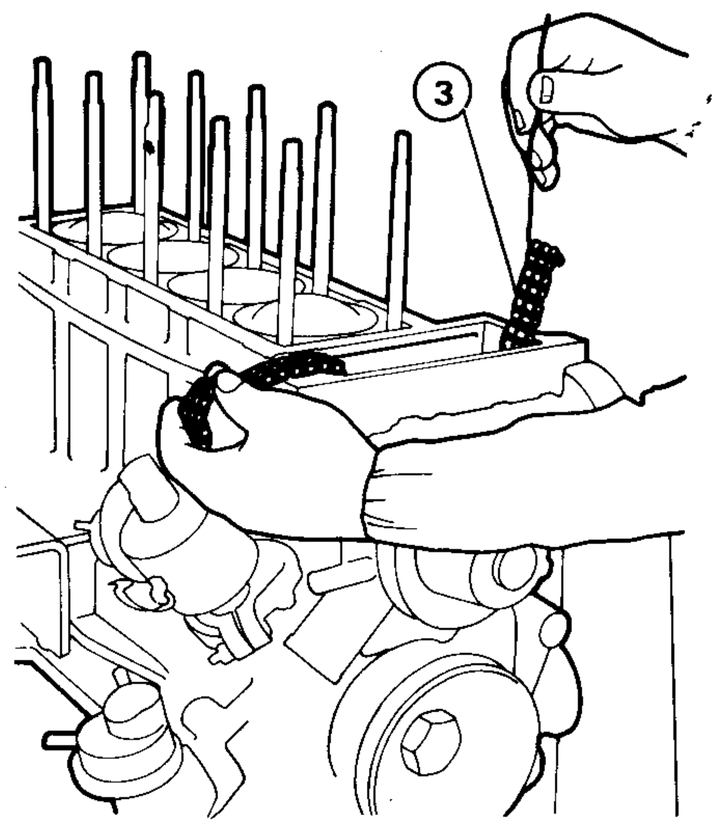

3. Camshaft drive chain

c. Remove cylinder liner retainer, install head gasket (4) and position oil seals (5).

CYLINDER HEAD INSTALLATION

PRELIMINARY OPERATIONS

a. Turn crankshaft to bring piston No. 1 to T.D.C. at the beginning of its power stroke, i.e. when reference mark on pulley (1) is aligned with pointer (2) on front cover; furthermore, distributor brush on front cover shall be positioned as per step i. in previous paragraph «Front Cover Installation».

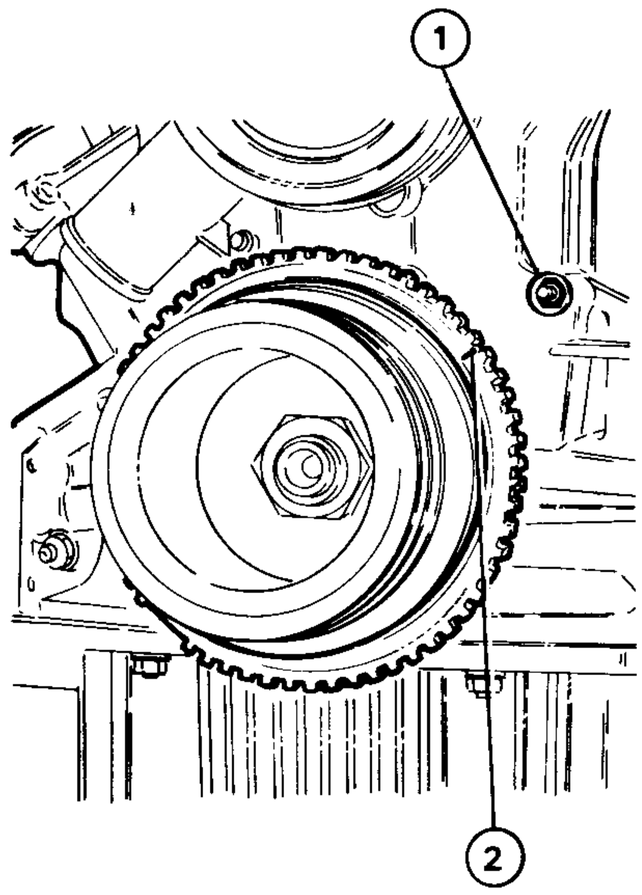

1. Pointer
2. Pulley mark

b. Install camshaft drive chain (3) on idler gears as shown below.

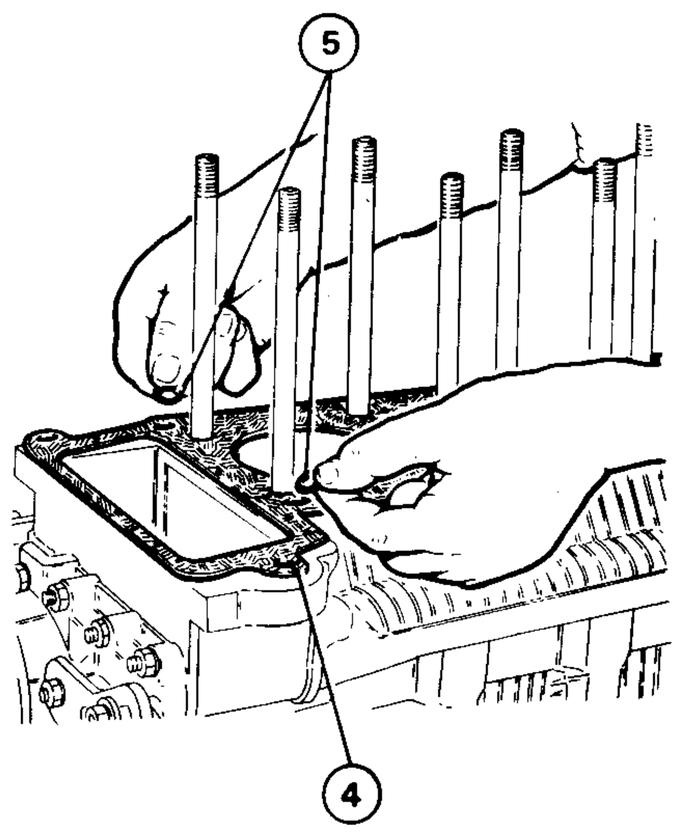

4. Head gasket
5. Oil seals

CYLIDER HEAD INSTALLATION

a. Turn camshafts so that cylinder No. 1 cams point outward.
With camshafts in this position, align reference marks on shafts (1) with those on centre caps (2).
b. Correctly position distributor turning it till reference mark on skirt edge is positioned as shown in the picture.

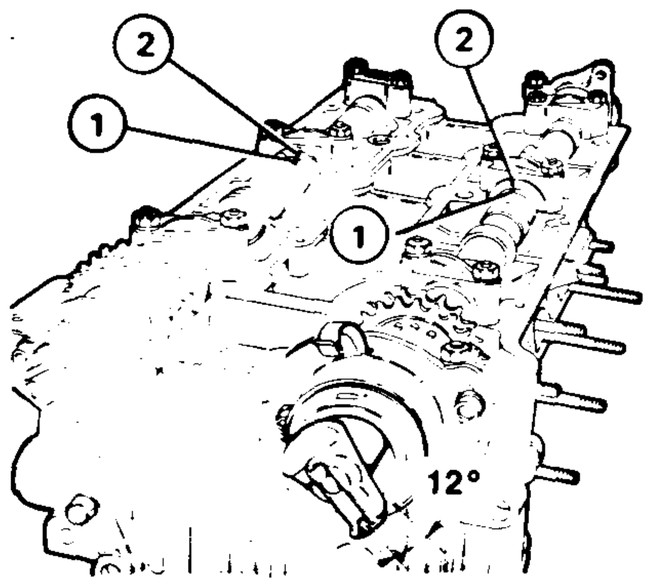

1. Shafts reference marks
2. Caps reference marks

c. **Install cylinder head on engine block,** lubricate stud threads, washers and nuts with engine oil.

d. Tighten the ten cylinder head nuts in two or three stages following the numerical sequence shown on the following page. Refer to the Inspection Specifications Tightening Torque table for the correct tightening torques.

e. Apply DIRING-Curil sealing compound (Part No. 3522-00017) to threads of screws (3).

Install screws with associated washers and secure cylinders head to block.

f. Install chain overcamshaft drive gears and chain tensioner gear. Join chain ends with master link.

g. Loosen chain tensioner screw. Turn crankshaft slowly in its normal direction of rotation to place chain tensioner under pull. Tighten screw.

h. Install rear journal cover (4) of exhaust-side camshaft.

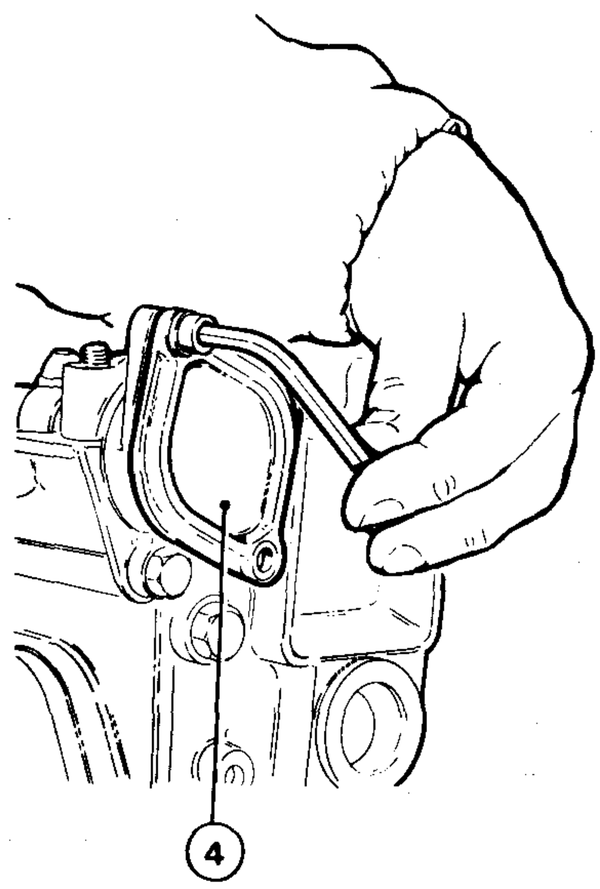

4. Journal cover

TIMING CHECK

a. Install dial indicator with support **C.6.0122** in spark plug seat on cylinder No. 1.

b. Turn crankshaft till pointer of dial gauge reverse its direction of rotation (piston No. 1 at T.D.C.).

c. Ensure that camshaft notches (1) are aligned with cap notches (2) when the cams of cylinder No. 1 are turned outwards.

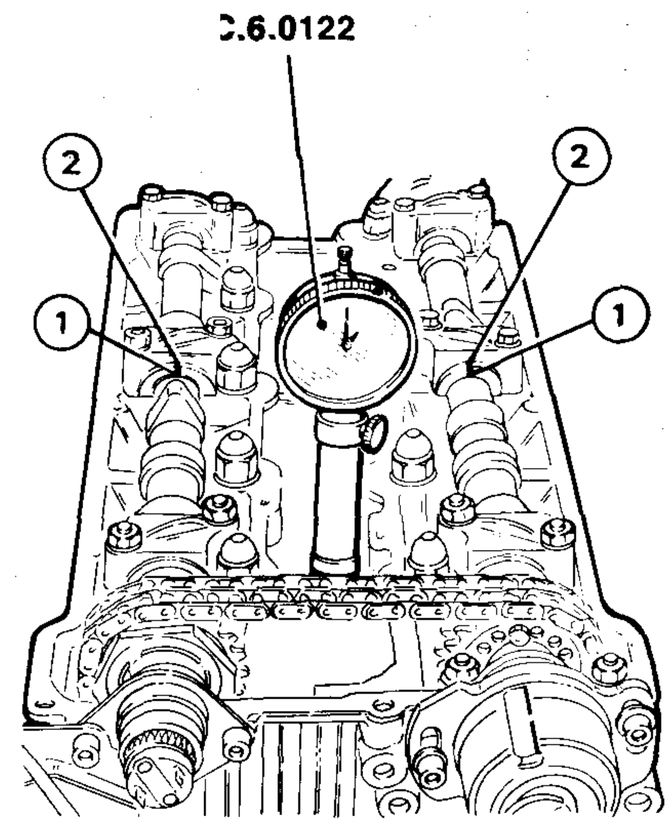

1. Camshaft notches
2. Cap notches

d. Make sure that fixed index mark (3) on the water pump and reference notch (4) marked on the crankshaft pulley and on the toothed wheel are aligned.

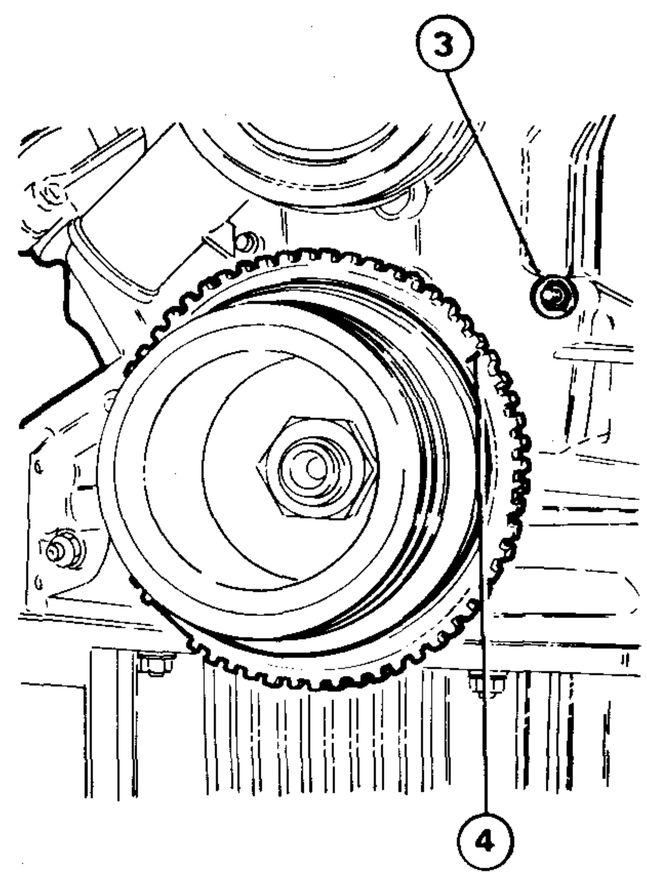

3. Fixed index mark
4. Crankshaft-pulley and toothed-wheel notch

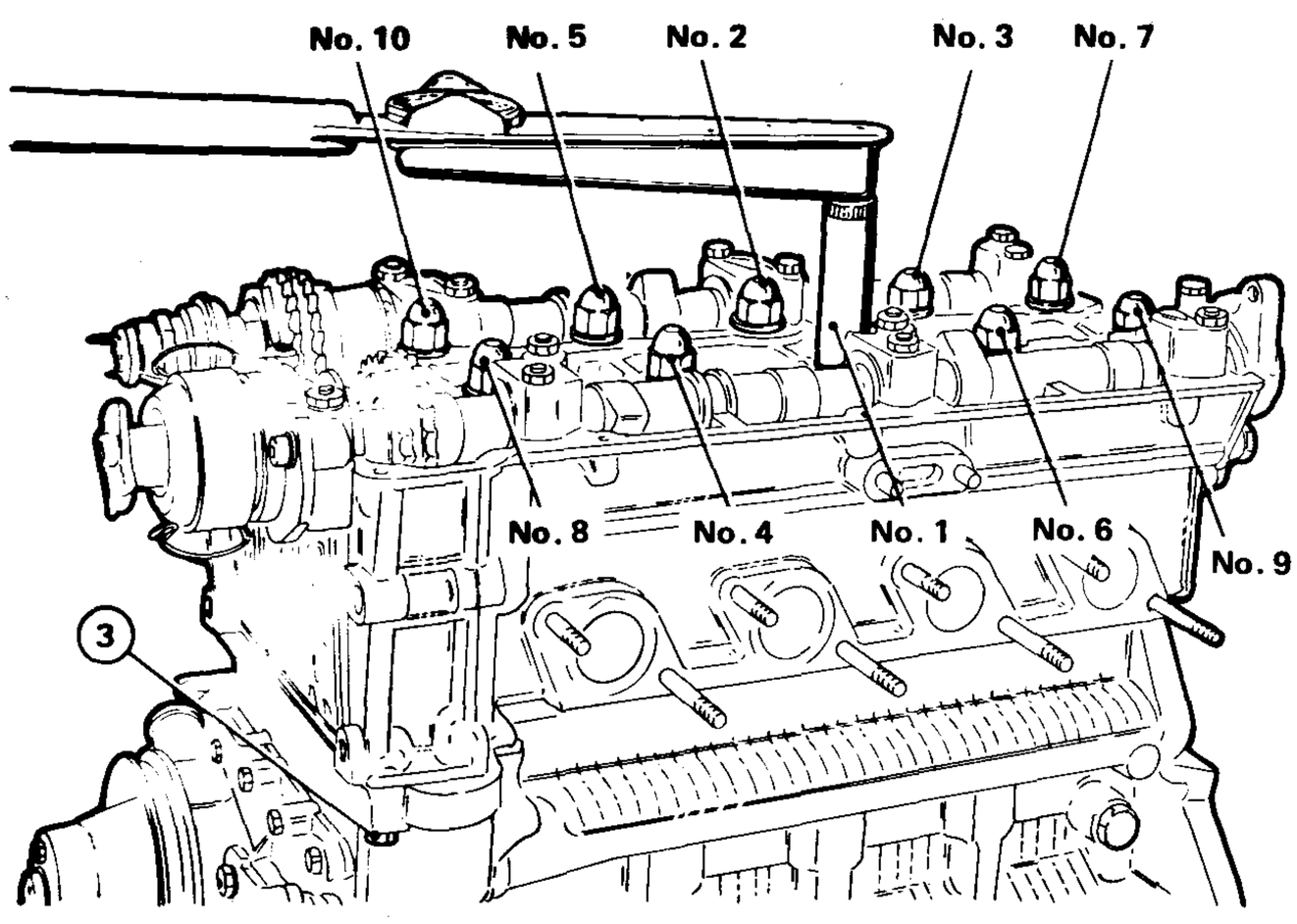

3. Front cover securing screws

e. Ensure that centre line (5) of the ignition-distributor revolving brush on the cylinder head is correctly positioned as against distributor-skirt reference notch (6), as shown in the figure.

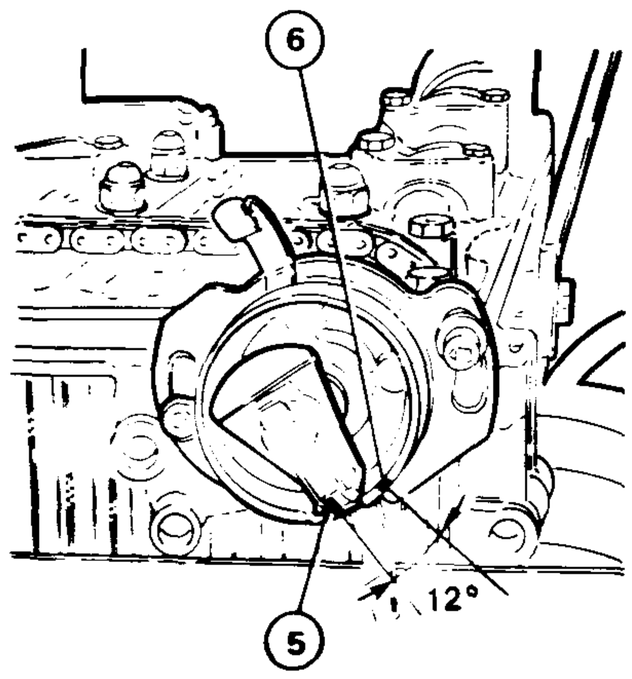

12° equal to a distance of 5 to 6 mm (0.20 to 0.24 in)

5. Centre line, distributor brush
6. Reference notch on distributor skirt

f. **Ensure that centre line** (7) of the ignition-distributor revolving brush on the front engine cover is correctly positioned as against reference notch (8) on the distributor skirt, as shown in the figure.

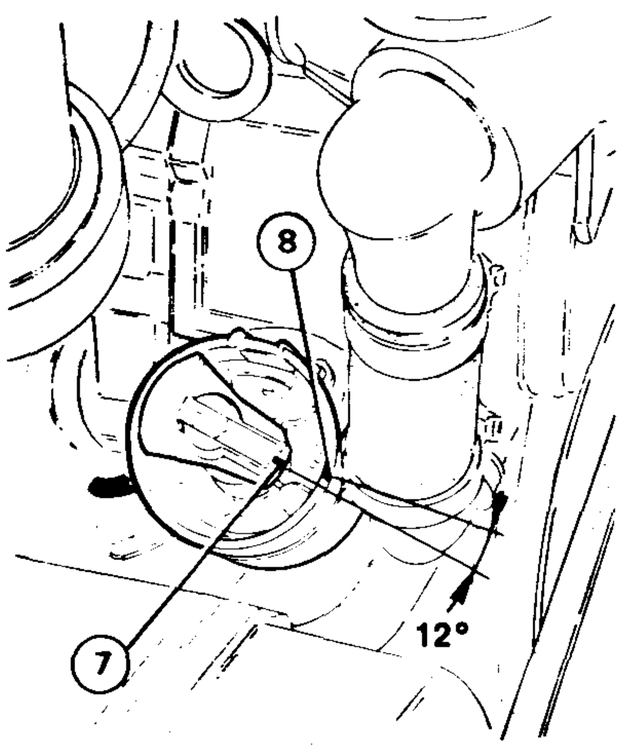

12° equal to a distance of 5 to 6 mm (0.20 to 0.24 in)

7. Centre line, distributor brush
8. Reference notch on distributor skirt

g. If the notches on the camshafts are not aligned with the notches on the relevant caps, proceed as follows.

h. **Intake-side camshaft**

1. Remove tool **C.6.0122**.
2. Insert highest speed and move vehicle in such a way as to be able to insert restraining tool **A.2.0423** into the timing variator.

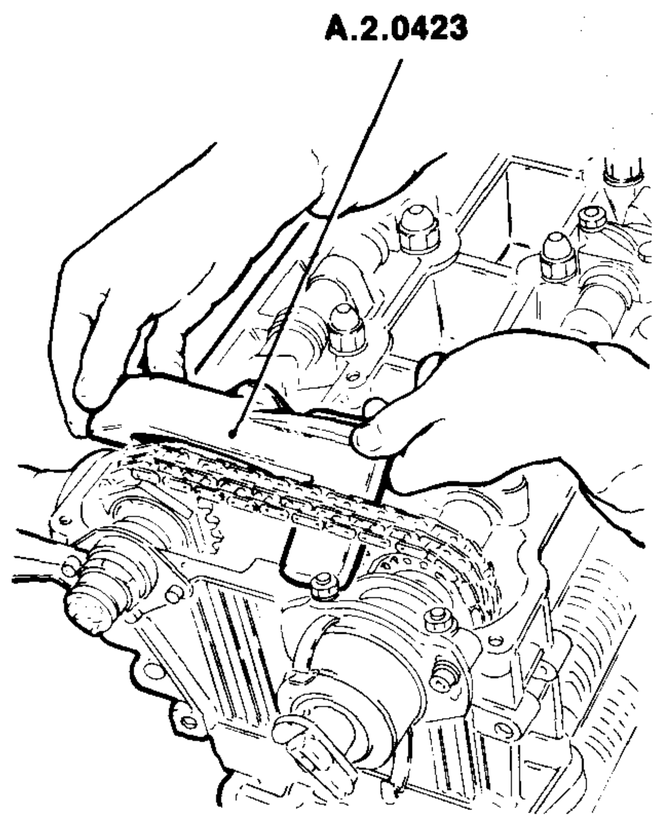

3. **Using wrench A.5.0232**, slacken timing-variator securing nut no further than **1/8 of a turn**.

CAUTION:
Strictly stick to the above mentioned procedure to avoid disengaging the front dog clutch.

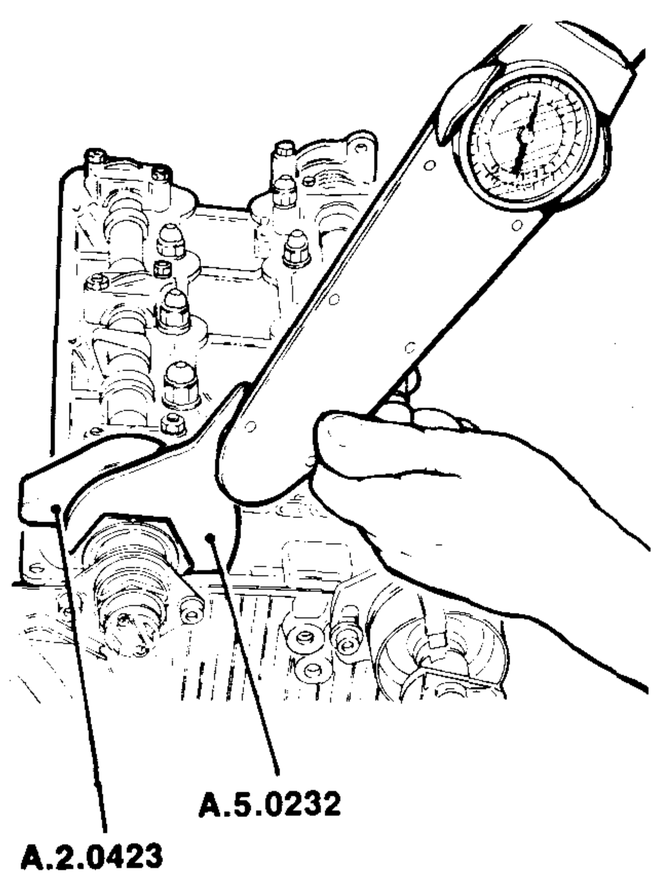

4. Free the camshaft, removing tool **A.2.0423**.
5. Return piston No. 1 to T.D.C. with valves closed (piston No. 1 cams pointing outwards).
6. Re-insert tool **C.6.0122** into spark plug support hole in order to establish exact position of T.D.C.
7. Further unscrew the timing-variator securing nut previously slackened so that the gear is completely disengaged, from the front clutch.
8. Using a synthetic-resin mallet, rotate the camshaft in order to align the reference notches.

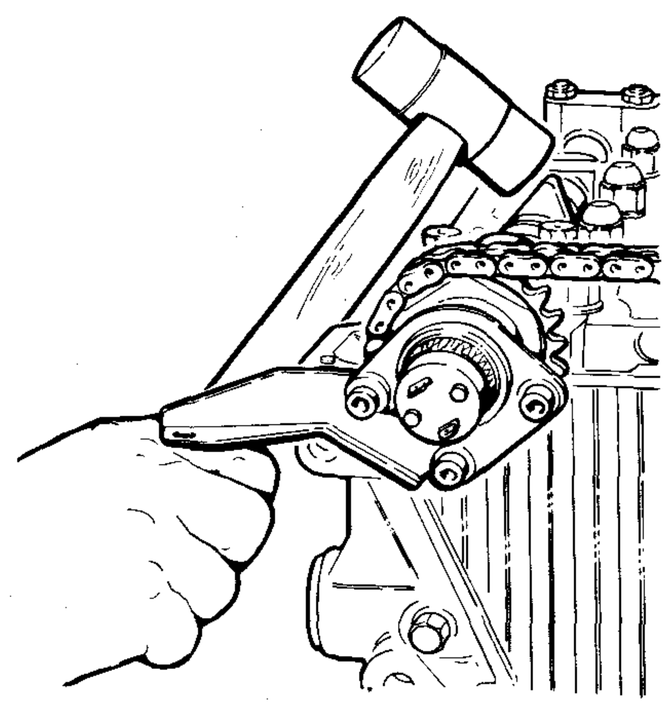

9. Tighten the nut to lock the gear on the front clutch.
10. Lock the timing variator using tool **A.2.0423**.
11. Tighten the nut using wrench **A.5.0232** to the prescribed torque

    88 to 96 N·m
    (8.8 to 9.6 kg·m
    64.9 to 70.8 ft·lb);

    equal to:

    (108 to 117 N·m)
    (11 to 12 kg·m
    (79.6 to 86.3 ft·lb)

    on nut axis.

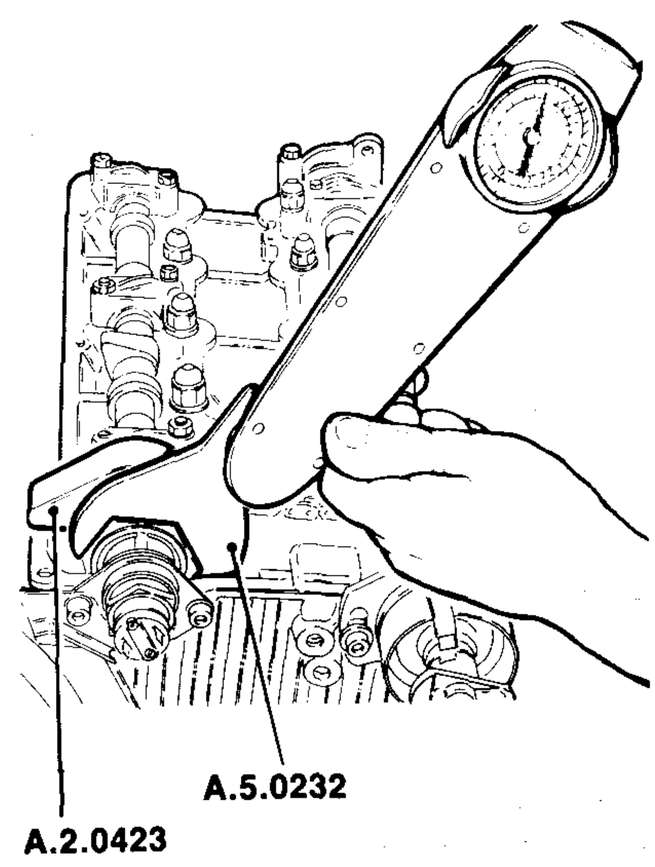

12. Unlock timing variator, removing tool **A.2.0423**.

i. **Exhaust-side camshaft**

13. Remove bolt (7) securing gear (8) to camshaft sleeve.

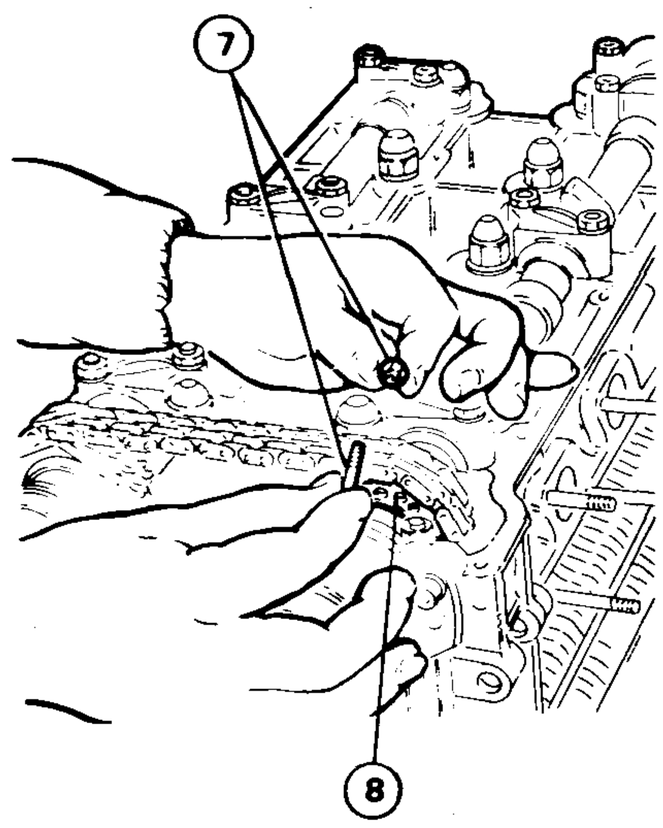

7. Bolt
8. Camshaft gear

14. Raise the nut locking piece and using tool **A.5.0103** as a locator, loosen the nut securing the gear to the camshaft.
15. Using tool **A.5.0103**, rotate camshaft without moving the chain, in order to align the reference notches.
16. Still using tool **A.5.0103** as a locator, tighten the nut previously slackened.
17. Replace bolt (7) in the aligned holes of gear (8) and tighten it.
18. Fold down the nut lockin piece.
19. Ensure that the centre line of the distributor revolving brush is positioned as per f. above; tighten the relative securing screws.

TIMING COVER INSTALLATION

a. Install oil seal half rings on cylinder head and fill camshaft bearing wells with engine oil.

b. Clean cover surface with butyl acetate or methylethylketone to remove any gasket fragments.

Seal gaskets to cover using sealing compound DIRING-Heldite.

c. Position timing cover (1) on head and tighten securing screws (2) to specified torque.

(T) : Tightening torque
Timing cover
10 to 14 N·m
(1.0 to 1.4 kg·m
7.4 to 10.3 ft·lb)

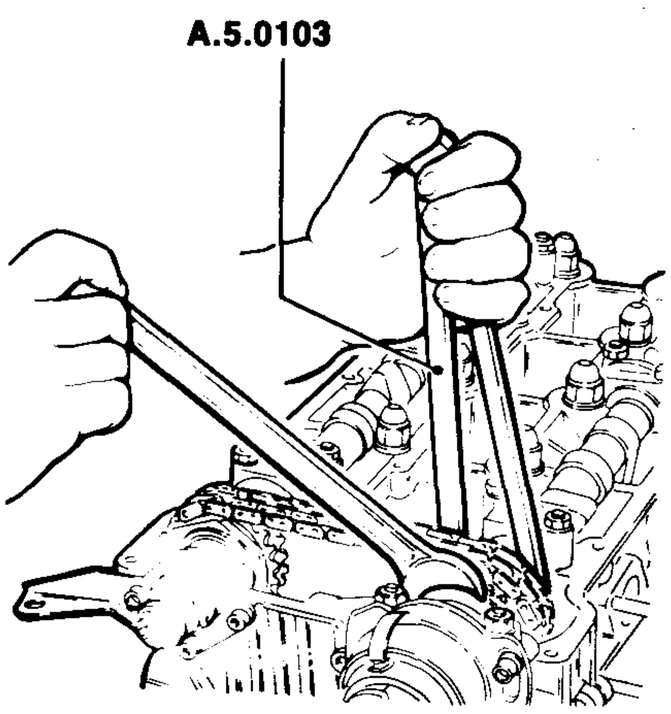

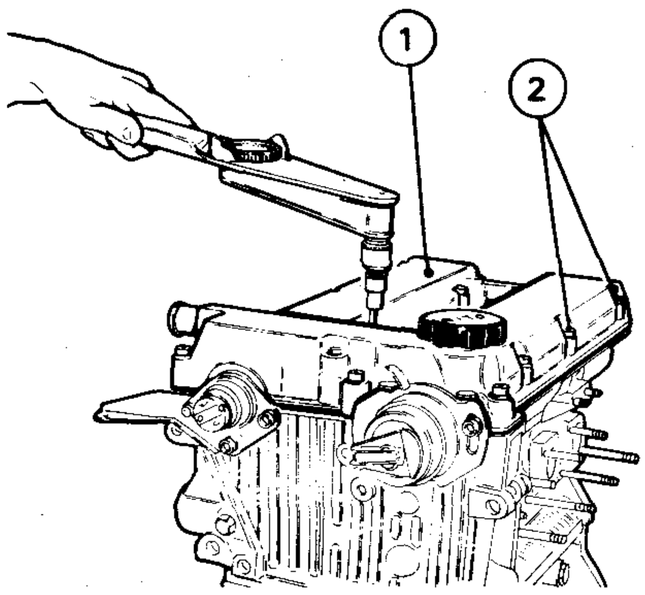

1. Timing cover
2. Securing screws

ENGINE FITTING OUT

COMPONENT INSTALLATION

a. To complete engine assembly, install the following components proceeding, when necessary, in reverse order as against removal:

— Holder with r.p.m. and timing sensor (1).
— Alternator (2) with relevant belt (3).
— Oil filter (4).
— Exhaust manifolds with relevant gaskets (5).
— Spark plugs.
— Front spark plug distributor cap (6) with relevant wiring.
— Rear spark plug distributor cap (7) with relevant wiring.
— Spark plug wiring container and relevant plate (8).
— Spark plug cover (9).
— Lifting lugs (10).
— Manifold/collector box/carburettor (11).
— Thermostat (12) with relevant sleeve (13).
— Oil recovery hose (14).
— Oil vapour outlet hose (15).

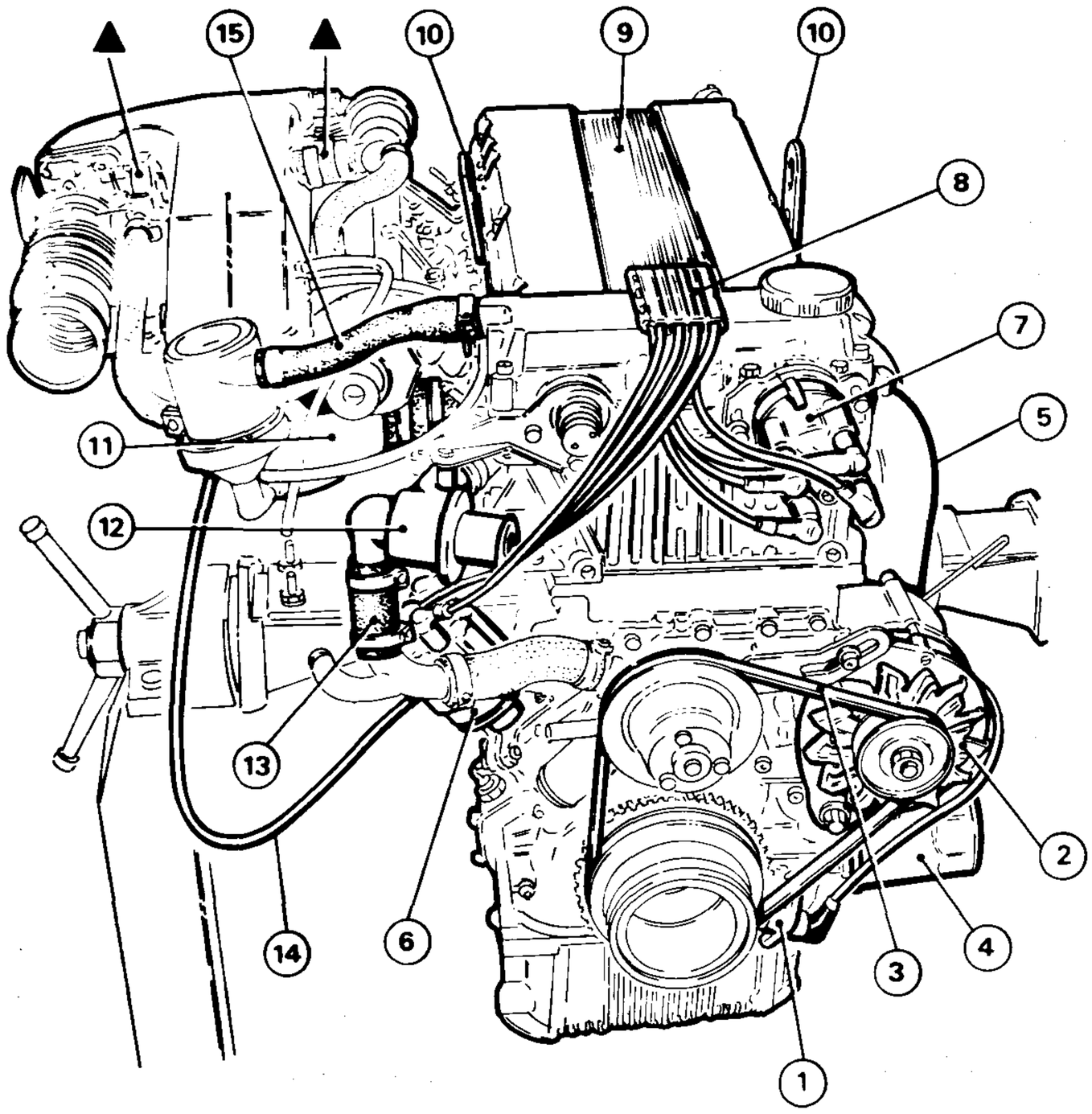

▲ **Component aspect not real**

1. Holder with r.p.m. and timing sensor
2. Alternator
3. Belt
4. Oil filter
5. Exhaust manifold
6. Front spark plug ignition distributor cap
7. Rear spark plug ignition distributor cap
8. Spark plug wiring
9. Spark plug cover
10. Engine lifting lug
11. Manifold/collector box/carburettor
12. Thermostat
13. Sleeve
14. Oil recovery hose
15. *Oil vapour outlet hose*

b. Remove tool previously mounted from engine flywheel to allow crankshaft to turn.
c. Hook engine to a hydraulic lift, apply a certain tension and remove bolts securing it to revolving overhaul stand brackets.
d. Install left and right engine mounts (16) on engine block; lock nuts (17) on engine block studs.
e. Fix tie rod (18) to intake manifold through bolts (19) and to engine mount through bolt (20).

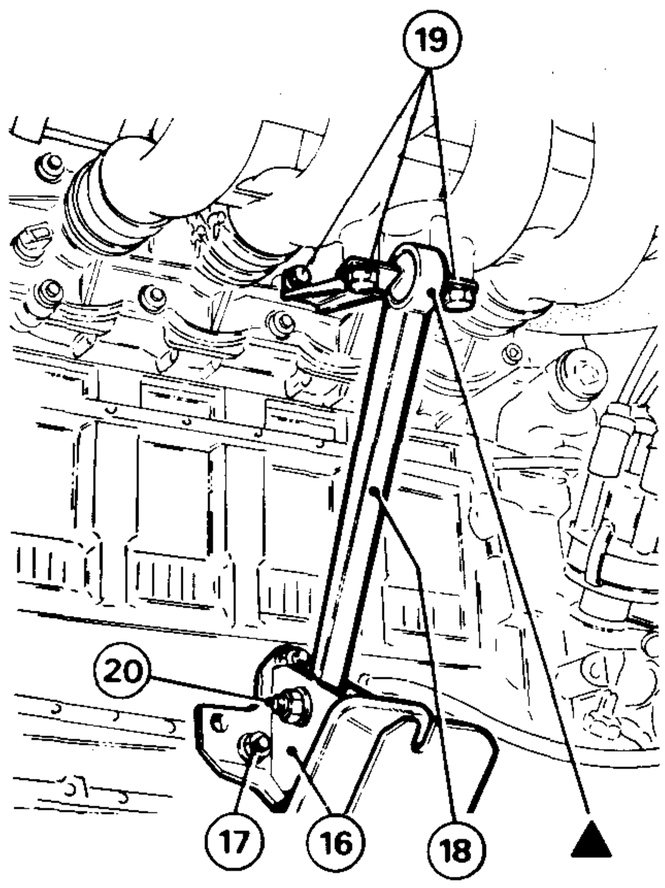

▲ **Component aspect not real**

16. Engine mount
17. Engine mount securing nuts
18. Tie rod
19. Tie rod securing bolts
20. Bolt

f. Install rear cover (21) and secure it with screws (22).
g. Position starter (23) with relevant shim and support on rear cover and secure with screws (24).

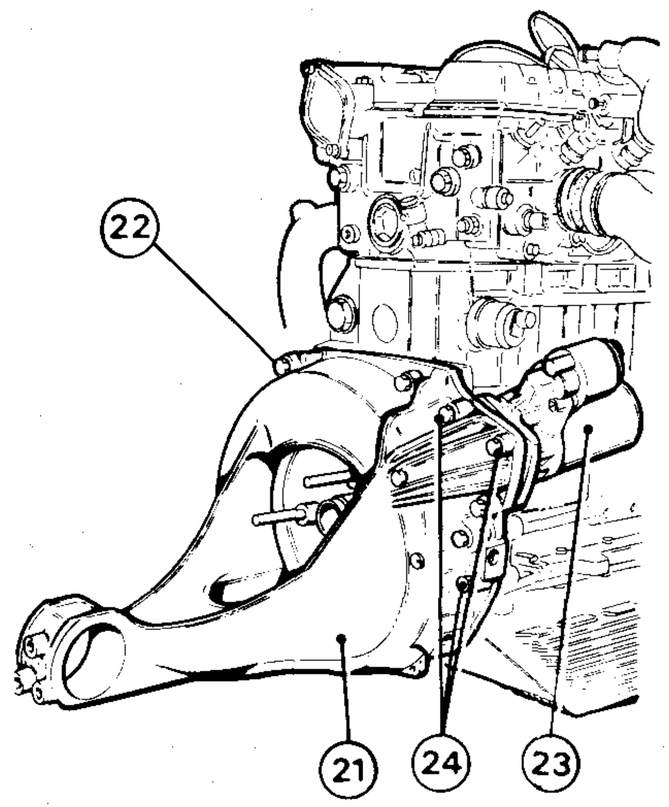

21. Rear cover
22. Rear cover securing screws
23. Starter
24. Starter securing screws

REAR COVER RUBBER BUSHING REPLACEMENT

Refer to relevant paragraph about **4-cylinder engines** 1.6 1.8 and 2.0.

LUBRICATION SYSTEM DESCRIPTION

The force feed and splash lubrication system employs a gear-type pump.
Pump (1), mounted on the engine front cover, is driven by a shaft which is driven, in turn, by a crankshaft gear.
Oil is taken from the oil pan through the pump, is filtered through suction wire mesh filter (2) and then through a duct it is pressure-sent to oil filter (3) provided with a full-flow cartridge and a safety by-pass valve (4) scheduled to cope with possible cartridge clogging.
Maximum lubrication pressure is adjusted through a pressure relief valve fitted in the pump.
After being filtered, oil flows into main lubrication ducts (5), longitudinally positioned in the engine block, and in vertical ducts (6), placed in the engine block and the cylinder head.

Through three cross ducts (7), oil passes from main ducts (5) into lines (8) and (9) meant for the lubrication of main bearings and big end bearings.

From vertical ducts (6) oil flows into two ducts (10), longitudinally placed in the head, which account for the lubrication of camshaft journals (11) and tappets (12).
The lubrication duct for the intake-side camshaft is connected to line (13) for timing variator operation oil.
The return system consists of two ducts (14), longitudinally placed in the cylinder head, which are meant to collect oil from outlets (15) under each tappet and from rear well outlets (16). Then oil falls from the head into the pan, thus lubricating timing chain gears in the engine block.

1. Oil pump
2. Wire mesh filter
3. Oil filter
4. Safety valve
5. Main ducts in engine block
6. Vertical ducts
7. Cross ducts in engine block
8. Line for lubrication of main bearings
9. Line for lubrication of big end bearings
10. Longitudinal ducts in head
11. Camshaft journals
12. Valve tappets
13. Line for timing variator operation
14. Return ducts
15. Tappet outlets
16. Rear well outlets

DELIVERY
RETURN

LUBRICATION SYSTEM

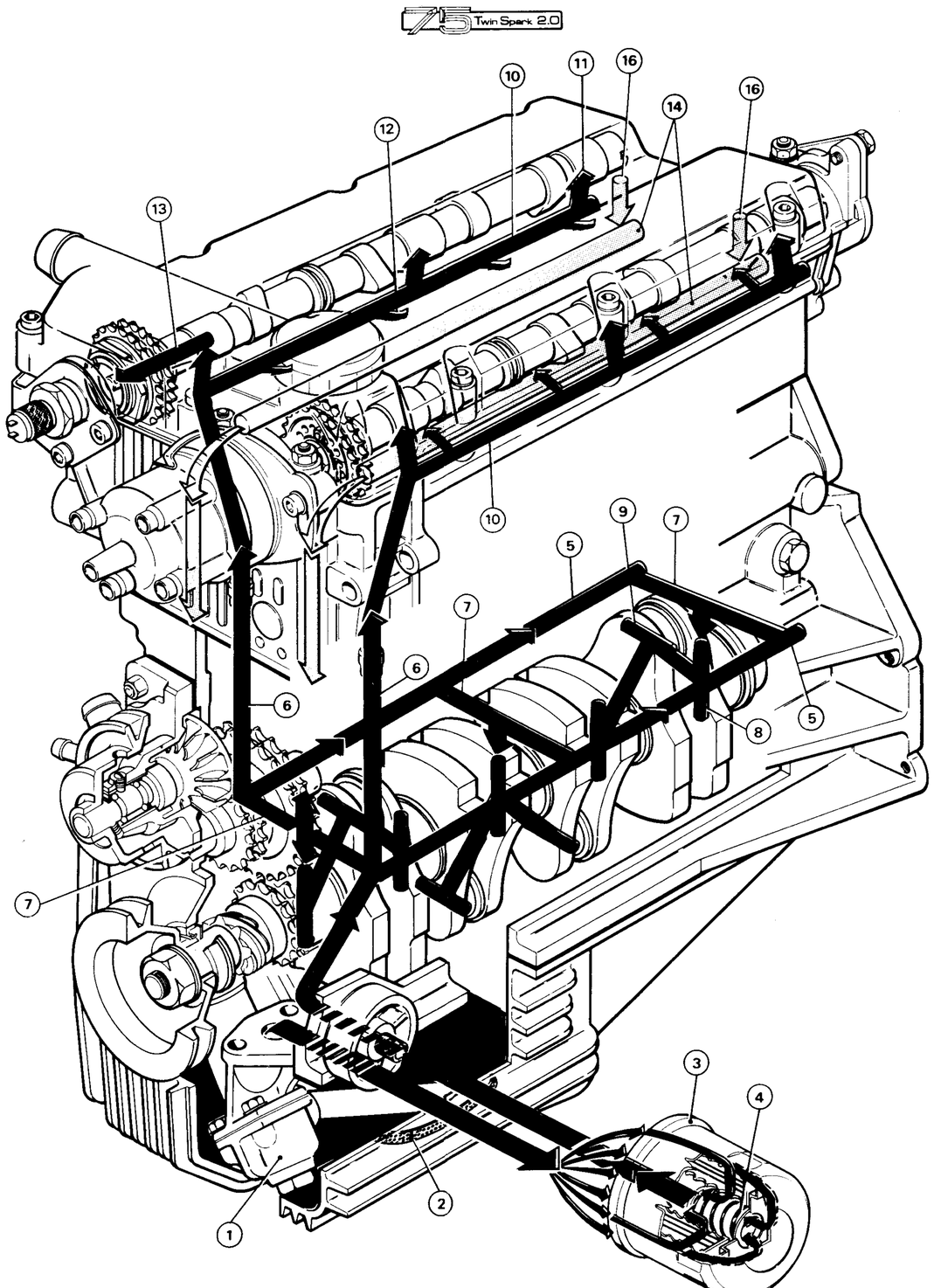

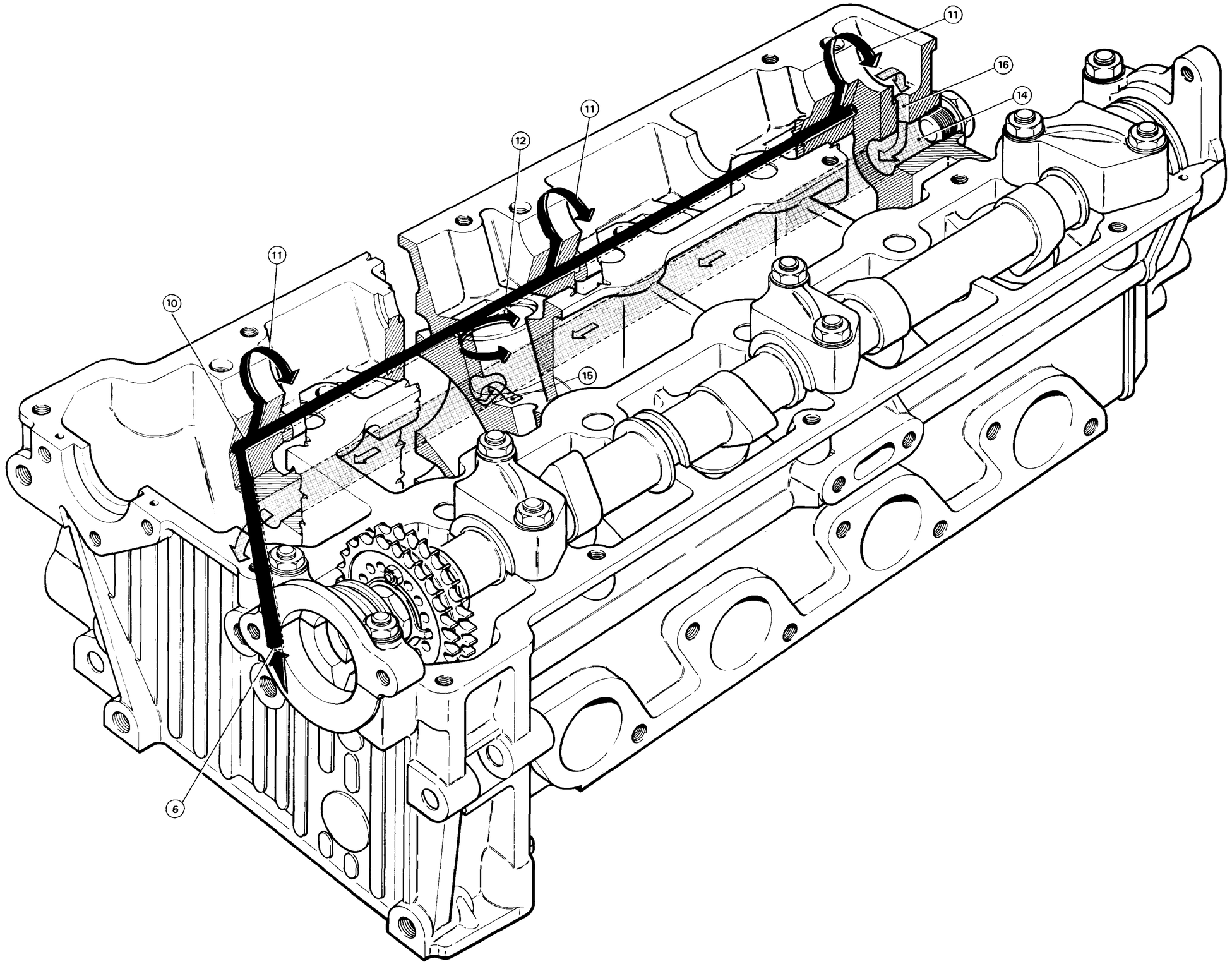
11
16
14
11
12
11
10
15
6

OIL PRESSURE CHECK

Refer to relevant paragraph about **4-cylinder engines** 1.6 1.8 and 2.0.

OIL PUMP DISASSEMBLY AND ASSEMBLY

Refer to relevant paragraph about **4-cylinder engines** 1.6 1.8 and 2.0.

OIL PUMP INSTALLATION

Refer to relevant paragraph about **4-cylinder engines** 1.6 1.8 and 2.0.

OIL PAN REMOVAL

Refer to relevant paragraph about **4-cylinder engines** 1.6 1.8 and 2.0.

CHECKS AND INSPECTION

Refer to relevant paragraph about **4-cylinder engines** 1.6 1.8 and 2.0.

OIL FILTER REPLACEMENT

Refer to relevant paragraph about **4-cylinder engines** 1.6 1.8 and 2.0.

SPECIFICATIONS AND GENERAL REQUIREMENTS

SPECIFICATIONS

ENGINE SPECIFICATIONS

		Engine			
		1600	1800	2000	
		(016.00)	(016.78)	(016.55)	(017.13)
Type		Otto cycle, 4-stroke			
No. and arrangement of cylinders		4, in-line			
Cylinder numbering		① ② ③ ④			
Bore - Stroke	mm	70 x 82	80x88.5	84 x 88.5	
	(in)	(2.76 x 3.23)	(3.15 x 3.48)	(3.31 x 3.48)	
Displacement	cm^3	1570	1779	1962	
	(cu.in)	(95.80)	(108.55)	(119.72)	
Combustion chamber volume	cm^3	49	52	61.3	
	(cu.in)	(2.99)	(3.17)	(3.74)	
Compression ratio		9	9.5	9	10
Power output DIN					
Maximum	kW (HP)	80 (109) * 79.3 (108)	89.7 (122) * 88.2 (120)	96 (130)	
Specific		51 (69.4) 50.6 (68.8)	50.4 (68.5) 49.5 (67.5)	49 (66)	
		at 5600 rpm	at 5300 rpm	at 5400 rpm	
Max. torque DIN	Nm (kgm)	141 (14.4)	167 (17)	178 (18.1)	182 (18.6)
	(ft.lb)	(104.0)	(123.2)	(131.3)	(134.2)
		at 4300 rpm	at 4000 rpm	at 4000 rpm	at 4000 rpm
Mean effective piston speed (1)	m/sec	15.3	15.6	15.93	
	(ft/s)	(50.2)	(51.2)	(52.3)	
Octane rating	N.O. - R.M.	≥ 98			
	Sensitivity (2)	≤ 11			
Engine oil pressure (3)					
at 800 - 900 rpm	kPa (bar; kg/cm^2; psi)	49.03 to 98,06 (0.49 to 0.98; 0.5 to 1; 7.1 to 14.2)			
at 5000 rpm		343.21 to 490.3 (3.43 to 4.90; 3.5 to 5; 49.8 to 71.1)			

(1) At maximum output rpm

(2) Difference between Research Method and Motor Method Octane Rating

(3) Check with oil at operating temperature (90°C; 194°F)

* Approved for Austria and Germany only

SPECIFICATIONS

ENGINE SPECIFICATIONS

		Engine			
		1600	1800	2000	2000
		(061.00)	(062.02)	(062.12)	(017.13)
Type		Otto cycle, 4-stroke			
No. and arrangement of cylinders		4, in-line			
Cylinder numbering		① ② ③ ④			
Bore - Stroke	mm	78 x 82	80 x 88.5	84x88.5	84 x 88.5
	(in)	(3.07 x 3.23)	(3.15 x 3.48)	(3.31 x 3.48)	(3.31 x 3.48)
Displacement	cm^3	1570	1779	1962	1962
	(cu.in)	(95.80)	(108.55)	(119.72)	(119.72)
Combustion chamber volume	cm^3	51	52	61.3	61.3
	(cu.in)	(3.11)	(3.17)	(3.74)	(3.74)
Compression ratio		9	9.5	9	10
Power output DIN					
Maximum	kW (HP)	81 (110)	88 (120)	94 (128)	94 (128)
		at 5800	at 5300 rpm	at 5400 rpm	at 5400 rpm
Max. torque DIN	Nm (kgm)	146 (14.9)	168.8 (17)	179.5 (18.2)	176.5 (17.9)
	(ft.lb)	(107.7)	(124.4)	(132.4)	(130.2)
		at 4000 rpm	at 4000 rpm	at 4000 rpm	at 4000 rpm
Mean effective piston speed (1)	m/sec	15.3	15.6	15.93	15.93
	(ft/s)	(50.2)	(51.2)	(52.3)	(52.3)
Octane rating	N.O. - R.M.	≥ 98			
	Sensitivity (2)	≤ 11			
Engine oil pressure (3)					
at 800 - 900 rpm	kPa (bar; kg/cm^2; psi)	49.03 to 98.06 (0.49 to 0.98; 0.5 to 1; 7.1 to 14.2)			
at 5000 rpm		343.21 to 490.3 (3.43 to 4.90; 3.5 to 5; 49.8 to 71.1)			

(1) At maximum output rpm

(2) Difference between Research Method and Motor Method Octane Rating

(3) Check with oil at operating temperature (90°C; 194°F)

SPECIFICATIONS

ENGINE SPECIFICATIONS

		Engines	
		1800	2000
		(061.34)	(062.24)
Type		Otto cycle, 4-stroke	
No. and arrangement of cylinders		4 in-line	
Cylinder numbering		① ② ③ ④	
Bore - Stroke	mm	80 x 88.5	84 x 88.5
	(in)	(3.15 x 3.48)	(3.31 x 3.48)
Displacement	cm^3	1779	1962
	(cu.in)	(108.55)	(119.72)
Combustion chamber volume	cm^3	68.4	54.5
	(cu.in)	(4.17)	(3.33)
Compression ratio		7.5	10
Power output DIN Maximum	kW (HP)	114 (153) at 5800 rpm	107 (146) at 5800 rpm
Max. torque DIN	Nm (kgm)	225.4 (23) max	156.9 (16)
	(ft·lb)	(166)	(115)
		at 2600 rpm	at 2000 rpm
			176.5 (18)
			(130)
			at 3000 rpm
			186.3 (19)
			(137)
			at 4000 rpm
Mean effective piston speed (1)	m/sec	15.34	17.7
	(ft/s)	(50.3)	(58.07)
Octane rating	N.O. - R.M.	≥ 98	
	Sensitivity (2)	≤ 11	
Engine oil pressure (3) Minimum at idle		49.03 (0.49; 0.5; 7.1)	
Minimum at peak rpm	kPa	343.19	
	(bar; kg/cm^2; psi)	(3.43; 3.5; 49.7)	
Maximum at peak rpm		441.24 to 490.27 (4.41 to 4.90; 4.5 to 5.0; 63.9 to 71)	

(1) At maximum output rpm
(2) Difference between Research Method and Motor Method Octane Rating
(3) Check with oil at operting temperature (90°C; 194°F)

CHECKS AND ADJUSTMENTS

VALVE TIMING DATA (1)

REFERENCE MARKS ON FRONT CAMSHAFT BEARING CAP (viewed from flywheel side)

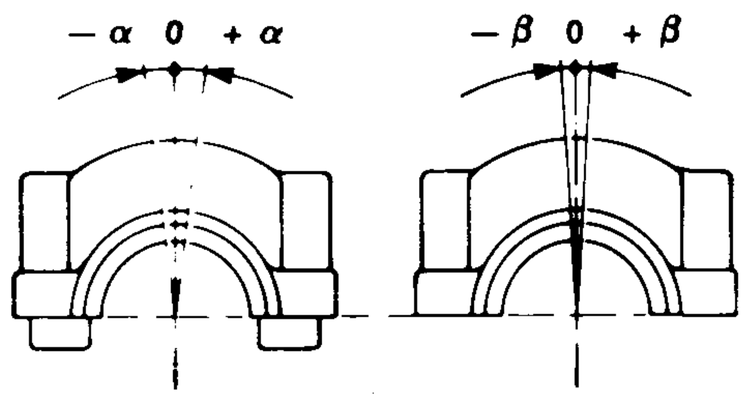

			Engine			
			1600	1800	2000	
			(016.00)	(016.78)	(016.55)	(017.13)
Camshafts	Intake		105.20.03.200.00	105.48.03.200.01		116.85.03.200.01
	Exhaust		105.20.03.200.00	105.48.03.200.01		105.20.03.200.00
Clearance between cam heel radius and tappet head	Intake	mm (in)	0.400 to 0.450 (0.016 to 0.018)	0.400 to 0.450 (0.016 to 0.018)		
	Exhaust	mm (in)	0.450 to 0.500 (0.018 to 0.020)	0.450 to 0.500 (0.018 to 0.020)		
Angular position of timing mark on front bearing cap	Intake	(β)	+1°	—0°15'		+12°45'
	Exhaust	(α)	—4°	+0°15'		—1°
Nominal lift	Intake	mm (in)	9 (0.35)	9.5 (0.37)		11 (0.43)
	Exhaust	mm (in)	9 (0.35)	9.5 (0.37)		9 (0.37)

(1) Engine cold

VALVE TIMING DATA (1)

REFERENCE MARKS ON FRONT CAMSHAFT BEARING CAP (viewed from flywheel side)

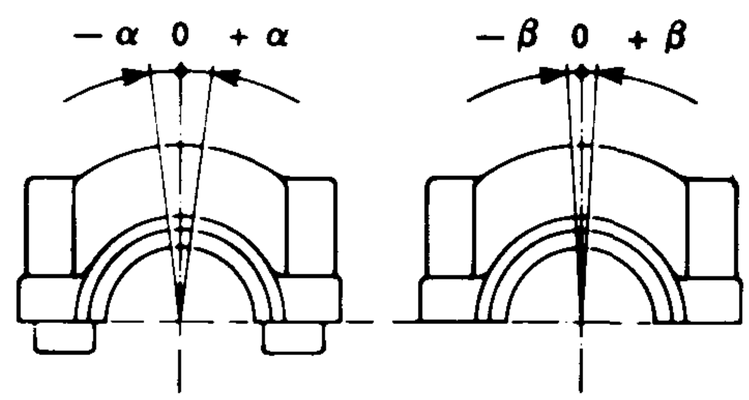

			Engine				
			1600	1800	2000	2000	1800
			(061.00)	(062.02)	(062.12)	(062.24)	(061.34)
Camshafts	Intake		116.55.03.200.08			195.36.03.200.01	116.99.03.200.00
	Exhaust		105.20.03.200.00			195.36.03.201.05	105.20.03.200.00
Clearance between cam heel radius and tappet head	Intake	mm (in)	0.400 to 0.450 (0.016 to 0.018)			0.400 to 0.450 (0,0157 to 0,0177)	0.400 to 0.450 (0.0157 to 0.0177)
	Exhaust	mm (in)	0.450 to 0.500 (0.018 to 0.020)			0.450 to 0.500 (0.0177 to 0.0197)	0.550 to 0.600 (0.022 to 0.024)
Angular position of timing mark on front bearing cap	Intake	(β)	—2°04'			+2°40'	—1°20'30''
	Exhaust	(α)	—1°06'			—13°15'	—7°
Nominal lift	Intake	mm (in)	11 (0.43)			11 (0.43)	8 (0.31)
	Exhaust	mm (in)	9 (0.35)			9.5 (0.37)	9 (0.35)

(1) Engine cold

VALVE TIMING DATA (1)

VALVE OPENING AND CLOSING ANGLE CHECK
(crankshaft rotation counterclokwise when viewed from flywheel side)

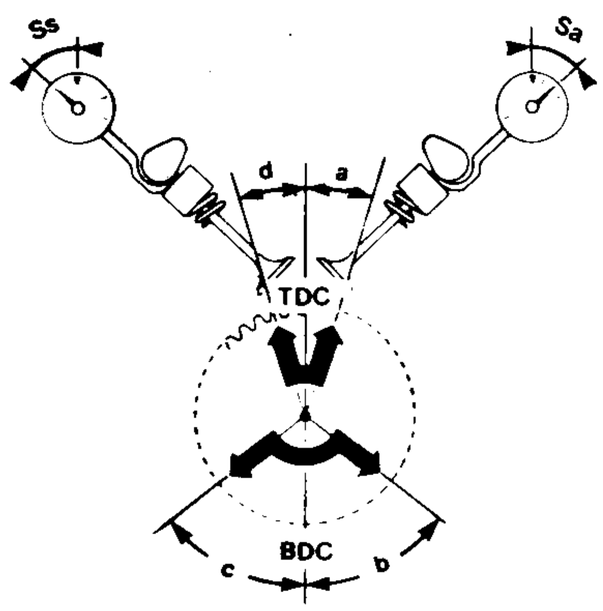

mm (in)

				Engine			
				1600	1800	2000	
				(016.00)	(016.78)	(016.55)	(017.13)
Intake	Opening	Linear displacement of tappet	(Sa)	0.25 (0.010)			
		Corresponding angular movement (BTDC) (2)	(a)	14°46' to 17°46'	21°30' to 24°30'		4° to —3°
	Closing	Linear displacement of tappet	(Sa)	0.25 (0.010)			
		Corresponding angular movement (ABDC)	(b)	38°46' to 41°46'	40°30' to 43°30'		65° to 72°
Exhaust	Opening	Linear displacement of tappet	(Ss)	0.20 (0.008)			
		Corresponding angular movement (BBDC)	(c)	44°46' to 47°46'	40°30' to 43°30'		38°30' to 41°30'
	Closing	Linear displacement of tappet	(Ss)	0.20 (0.008)			
		Corresponding angular movement (ATDC)	(d)	8°46' to 11°46'	21°30' to 24°30'		14°30' to 17°30'

(1) Engine cold
(2) ATDC for 017.13 engines

VALVE TIMING DATA (1)

VALVE OPENING AND CLOSING ANGLE CHECK
(crankshaft rotation counterclockwise when viewed from flywheel side)

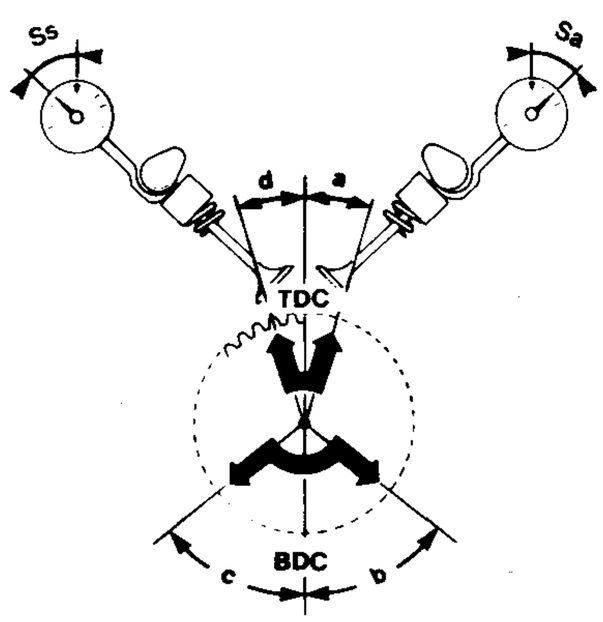

mm (in)

				Engine			
				1600	1800	2000	1800
				(061.00)	(062.02)	(062.12)	(061.34)
Intake	Opening	Linear displacement of tappet	(Sa)	0.25 (0.010)			0.25 (0.010)
		Corresponding angular movement (BTDC)	(a)	27°30' to 30°30'			14°49' to 17°49'
	Closing	Linear displacement of tappet	(Sa)	0.25 (0.010)			0.25 (0.010)
		Corresponding angular movement (ABDC)	(b)	38°30' to 41°30'			28°49' to 31°49'
Exhaust	Opening	Linear displacement of tappet	(Ss)	0.20 (0.008)			0.125 (0.005)
		Corresponding angular movement (BBDC)	(c)	38°30' to 41°30'			50°45'30'' to 53°45'30''
	Closing	Linear displacement of tappet	(Ss)	0.20 (0.008)			0.125 (0.005)
		Corresponding angular movement (ATDC)	(d)	14°30' to 17°30'			2°45'30'' to 5°45'30''

(1) Engine cold

VALVE TIMING DATA (1)

VALVE OPENING AND CLOSING ANGLE CHECK
(crankshaft rotation counterclockwise when viewed from flywheel side)

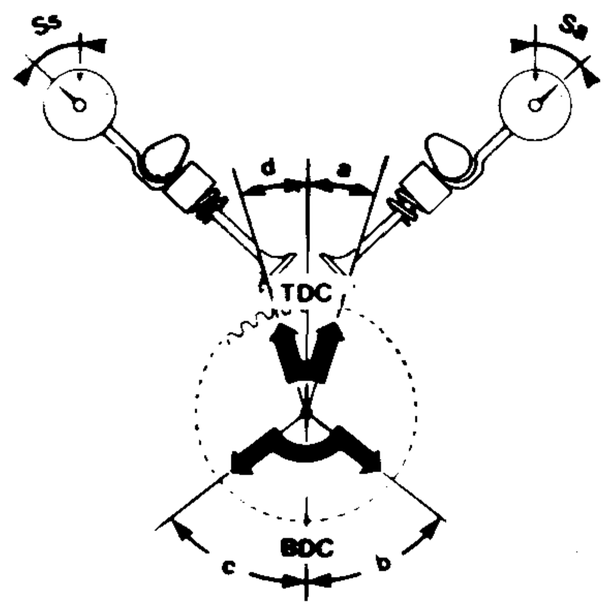

mm (in)

				Engine	
				2000	
				(062.24)	
	Opening	Linear displacement of tappet	(Sa)	0.25 (0.0098)	
		Corresponding angular movement (BTDC)	(a)	+0° to (—7°)(2)	
	Closing	Linear displacement of tappet	(Sa)	0.25 (0.0098)	
		Corresponding angular movement (ABDC)	(b)	65° to 72°	
	Opening	Linear displacement of tappet	(Ss)	0.20 (0.0079)	
		Corresponding angular movement (BBDC)	(c)	48°30' to 51°30'	
	Closing	Linear displacement of tappet	(Ss)	0.20 (0.0079)	
		Corresponding angular movement (ATDC)	(d)	14°40' to 17°40'	

(1) Engine cold
(2) ATDC

VALVE TIMING DATA (1)

VALVE TIMING DIAGRAM
(crankshaft rotation clockwise when viewed from front)

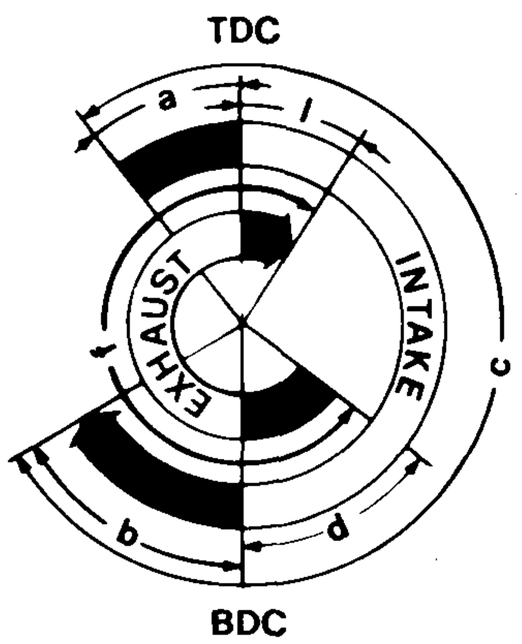

			Engine	
			2000	
			(062.24)	
Intake	Opens (BTDC)	(a)	24°44' to 17°44'	
	Closes (ABDC)	(b)	94°28' to 101°28'	
	Angle	(c)	299°12'	
Exhaust	Opens (BBDC)	(d)	67°50'	
	Closes (ATDC)	(e)	34°	
	Angle	(f)	281°50'	

Engine cold

CYLINDER LINERS, PISTONS, RINGS AND PINS

Cylinder liners

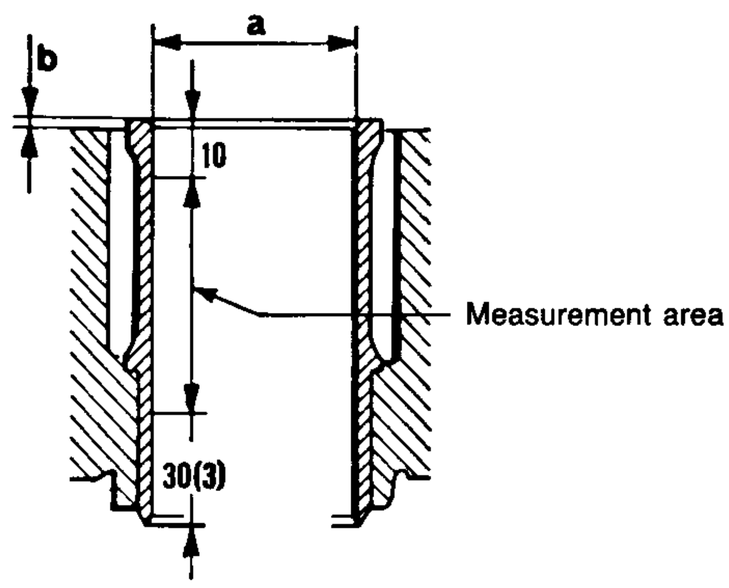

mm (in)

Description		Engine			
		1600	1800	2000	
		(016.00 - 061.00)	(016.78 - 062.02) (061.34)	(016.55 - 062.12)	(017.13)
Liner bore dia. (a)	Class A (Blue)	77.985 to 77.994 (3.0703 to 3.0706)	79.985 to 79.994 (3.0703 to 3.0706)	83.985 to 83.994 (3.3065 to 3.3068)	
	Class B (Pink)	77.995 to 78.004 (3.0707 to 3.0710)	79.995 to 80.004 (3.1494 to 3.1497)	83.995 to 84.004 (3.3069 to 3.3072)	
	Class C (Green)	78.005 to 78.014 (3.0711 to 3.0714)	80.005 to 80.014 (3.1498 to 3.1502)	84.005 to 84.014 (3.3073 to 3.3076)	
Liner stand-out (1) (b)		0.00 to 0.06 (0.00 to 0.0024)	0.01 to 0.06 (0.0004 to 0.0024)		
Max. ovality and taper (2)		0.01 (0.0004)			
Max. out-of-roundness		0.01 (0.0004)			

(1) Check after fitting liner retainers and tightening nuts to 10 - 15 Nm (1 to 1.5 kgm; 7.4 to 11.1 ft.lb)

(2) Max. limit along entire liner length (a)

(3) 26 mm (1 in) for 2000 engines (062.12)

Piston rings

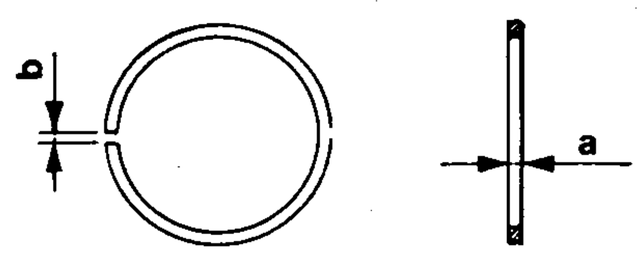

mm (in)

Description			Engine			
			1600	1800	2000	
			(016.00 - 061.00)	(016.78 - 062.02) (061.34)	(016.55 - 062.12)	(017.13)
Ring thickness	(a)	Top compression ring	1.478 to 1.490 (0.0582 to 0.0587)		1.478 to 1.490 (0.0582 to 0.0587)	1.728 to 1.740 (0.0680 to 0.0685)
		2nd compression ring	1.728 to 1.740 (0.0680 to 0.0685) 1.478 to 1.490 (0.0582 to 0.0587) (2)		1.728 to 1.740 (0.0680 to 0.0685)	1.478 to 1.490 (0.0582 to 0.0587)
		Oil control ring	3.978 to 3.990 (0.1566 to 0.1571) 3.478 to 3.490 (0.1369 to 0.1374) (2)		4.478 to 4.490 (0.1763 to 0.1768)	3.478 to 3.490 (0.1369 to 0.1374)
Ring gap (1)	(b)	Top compression ring	0.30 to 0.45 (0.012 to 0.018) 0.30 to 0.50 (0.0118 to 0.0197) (2)		0.25 to 0.40 (0.010 to 0.016)	0.30 to 0.45 (0.012 to 0.018)
		2nd compression ring	0.30 to 0.45 (0.012 to 0.018) 0.30 to 0.50 (0.0118 to 0.0197) (2)		0.30 to 0.45 (0.012 to 0.018)	0.25 to 0.45 (0.010 to 0.018)
		Oil control ring	0.30 to 0.45 (0.012 to 0.018)	0.25 to 0.40 (0.010 to 0.016) 0.25 to 0.50 (2) (0.010 to 0.011) (2)	0.25 to 0.40 (0.010 to 0.016)	0.25 to 0.40 (0.010 to 0.016)

(1) Fitted in checking fixture or cylinder liner
(2) For 061.34 engine only

Piston rings

mm (in)

Description			Engine			
			1600	1800	2000	
			(016.00 - 061.00)	(016.78 - 062.02) (061.34)	(016.55 - 062.12)	(017.13)
Ring thickness	(a)	Top compression ring	1.478 to 1.490 (0.0582 to 0.0587)		1.478 to 1.490 (0.0582 to 0.0587)	1.728 to 1.740 (0.0680 to 0.0685)
		2nd compression ring	1.728 to 1.740 (0.0680 to 0.0685) 1.478 to 1.490 (0.0582 to 0.0587) (2)		1.728 to 1.740 (0.0680 to 0.0685)	1.478 to 1.490 (0.0582 to 0.0587)
		Oil control ring	3.978 to 3.990 (0.1566 to 0.1571) 3.478 to 3.490 (0.1369 to 0.1374) (2)		4.478 to 4.490 (0.1763 to 0.1768)	3.478 to 3.490 (0.1369 to 0.1374)
Ring gap (1)	(b)	Top compression ring	0.30 to 0.45 (0.012 to 0.018) 0.30 to 0.50 (0.0118 to 0.0197) (2)		0.25 to 0.40 (0.010 to 0.016)	0.30 to 0.45 (0.012 to 0.018)
		2nd compression ring	0.30 to 0.45 (0.012 to 0.018) 0.30 to 0.50 (0.0118 to 0.0197) (2)		0.30 to 0.45 (0.012 to 0.018)	0.25 to 0.45 (0.010 to 0.018)
		Oil control ring	0.30 to 0.45 (0.012 to 0.018)	0.25 to 0.40 (0.010 to 0.016) 0.25 to 0.50 (2) (0.010 to 0.011) (2)	0.25 to 0.40 (0.010 to 0.016)	0.25 to 0.40 (0.010 to 0.016)

(1) Fitted in checking fixture or cylinder liner
(2) For 061.34 engine only

Pistons

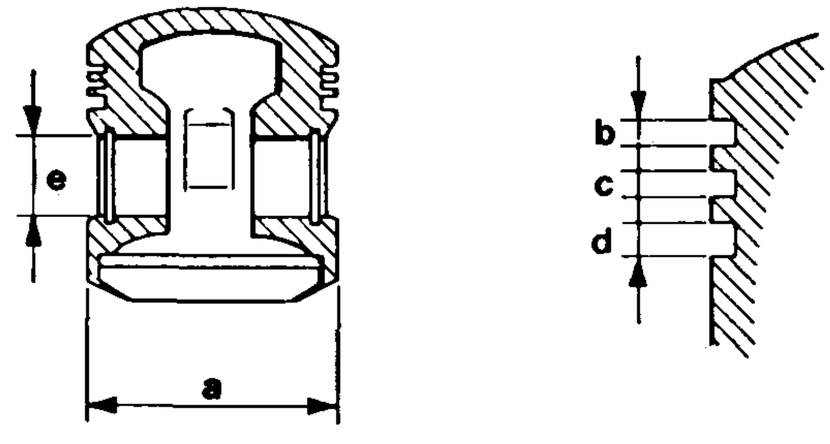

mm (in)

Description			Engine			
			1600	1800	2000	
			(016.00 - 061.00)	(016.78 - 062.02 - 061.34)	(016.55 - 061.12)	(017.13)
Piston diameter (1)	(a)	**Class A** (Blue)	77.945 to 77.955 (3.0687 to 3.0691)	79.945 to 79.955 (3.1474 to 3.1478) 79.935 to 79.945 (4) (3.1470 to 3.1474) (4)	83.935 to 83.945 (3.3045 to 3.3049)	
		Class B (Pink)	77.955 to 77.965 (3.0691 to 3.0695)	79.955 to 79.965 (3.1478 to 3.1482) 79.845 to 79.955 (4) (3.1435 to 3.1478) (4)	83.945 to 83.955 (3.3049 to 3.3053)	
		Class C (Green)	77.965 to 77.975 (3.0695 to 3.0699)	79.965 to 79.975 (3.1482 to 3.1486) 79.555 to 79.965 (4) (3.1320 to 3.1482) (4)	83.955 to 83.965 (3.3059 to 3.3057)	
Top compression ring **groove width**	(b)		1.535 to 1.555 (2) (0.0604 to 0.0612) (2) 1.525 to 1.545 (3) (0.0600 to 0.0608) (3)	1.525 to 1.545 (0.0600 to 0.0608)		
2nd compression ring groove width	(c)		1.775 to 1.795 (0.0699 to 0.0707) 1.525 to 1.545 (0.0600 to 0.0608) (4)			
Oil control ring groove width	(d)		4.015 to 4.035 (0.1581 to 0.1589) 3.515 to 3.535 (0.1384 to 0.1392) (4)		4.515 to 4.535 (0.1778 to 0.1785)	3.515 to 3.535 (0.1384 to 0.1392)
Pin bore dia.	(e)	Black	22.000 to 22.002 (0.86614 to 0.86622) 22.001 to 22.003 (0.86617 to 0.86626) (4)			
		White	22.003 to 22.005 (0.86626 to 0.86634)			

(1) Measure at right angles to pin bore and at the following distance from lower edge of skirt:
1600 engine [Borgo piston, 17 mm (0.67 in) — Mondial piston, 20 mm (0.79 in)] - 1800 engine (15 mm, 0.59 in) - 2000 engine (17 mm, 0.67 in)
(2) Borgo piston (3) Mondial piston (4) For 061.34 engine only

Piston pins

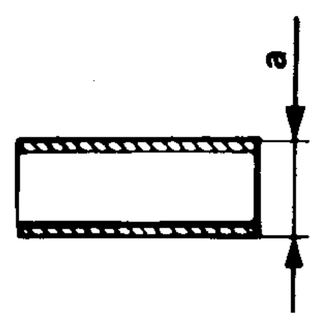

mm (in)

Description			Engine			
			1600	1800	2000	
			(016.00 - 061.000)	(016.78 - 062.02 - 061.34)	(016.55 - 062.12)	(017.13)
Pin diameter	(a)	Black	21.994 to 21.997 (0.8659 to 0.8660)			
		White	21.997 to 22.000 (0.8660 to 0.8661)			
Pin clearance		Black	0.003 to 0.008 (0.0001 to 0.0003) 0.004 to 0.009 (0.0002 to 0.0004) (1)			
		White	0.003 to 0.008 (0.0001 to 0.0003)			

(1) For 061.34 engine only

CRANKSHAFT, ENGINE BLOCK, CONNECTING RODS, BEARINGS AND FLYWHEEL

Crankshaft

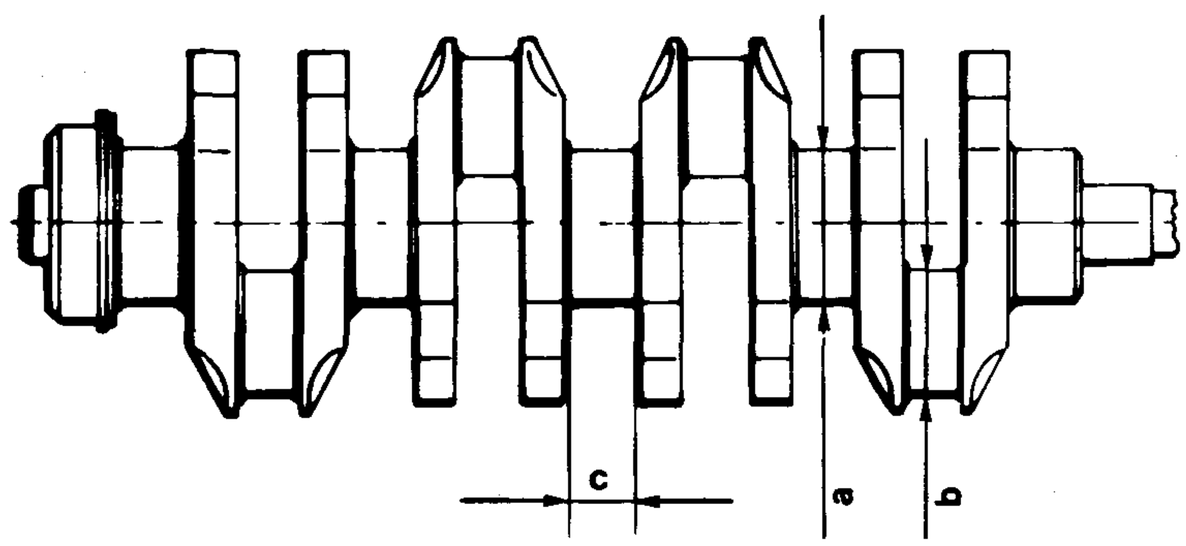

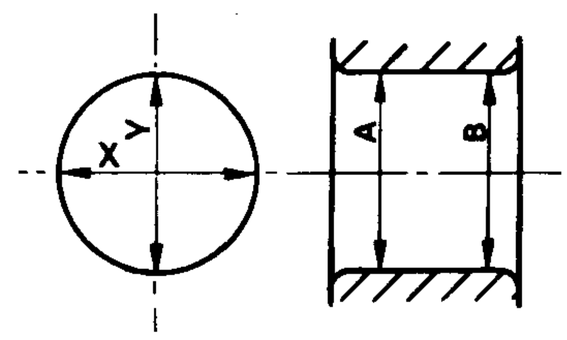

Ovality: X-Y
Taper: A-B

mm (in)

Description			Engine			
			1600	1800	2000	
			(016.00)	(016.78 - 062.02)	(016.55 - 017.13)	(062.12)
Main journal diameter	(a)	Standard Blue	59.951 to 59.961 (2.3603 to 2.3607)			59.956 to 59.966 (2.3605 to 2.3609)
		Standard Red	59.961 to 59.971 (2.3607 to 2.3611)			59.966 to 59.976 (2.3609 to 2.3613)
Crankpin diameter	(b)	Standard Blue	49.978 to 49.988 (1.9676 to 1.9680)			
		Standard Red	49.988 to 49.998 (1.9680 to 1.9684)			
Center main bearing journal width	(c)	Standard	30.000 to 30.035 (1.1811 to 1.1825)			
Max permissible main journal and crankpin ovality			0.007 (0.0003)			
Max. permissible main journal and crankpin taper			0.01 (0.0004)			
Max. crankpin misalignment relative to main journals			0.015 (0.0006)			
Max. main journal eccentricity			0.04 (0.0016)			
Max. crankpin offset (crankpin centerline to main journal centerline)			0.3 (0.012)			

Description			Engine		
			1600	1800	
			(061.00)	(061.34)	
Main journal diameter	(a)	Standard Blue (1)	59.956 to 59.966 (2.3605 to 2.3609)		
		Standard Red	59.966 to 59.976 (2.3609 to 2.3613)		
Crankpin diameter	(b)	Standard Blue (1)	49.978 to 49.988 (1.9676 to 1.9680)		
		Standard Red	49.988 to 49.998 (1.9680 to 1.9684)		
Center main bearing journal width	(c)	Standard	30.000 to 30.035 (1.1811 to 1.1825)		
Max permissible main journal and crankpin ovality			0.007 (0.0003)		
Max. permissible main journal and crankpin taper			0.01 (0.0004)		
Max. crankpin misalignment relative to main journals			0.015 (0.0006)		
Max. main journal eccentricity			0.04 (0.0016)		
Max. crankpin offset (crankpin centerline to main journal centerline)			0.3 (0.012)		

(1) Standard Light Blue for 061.34 engine only

Engine block

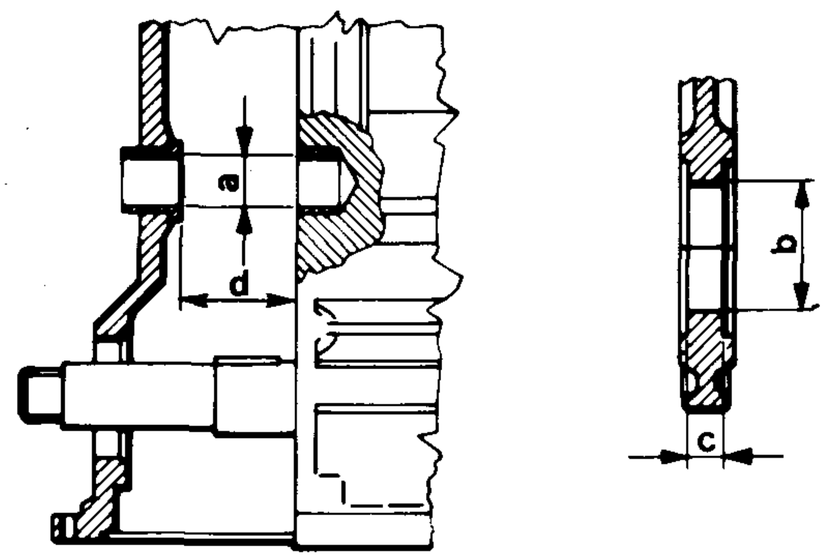

mm (in)

Description		Engine			
		1600	1800	2000	
		(016.00 - 061.00)	(016.78 - 062.02) (061.34)	(016.55 - 062.12)	(017.13)
Timing idler jackshaft bushing fitted I.D. (after reaming) (1)	(a)	20.677 to 20.698 (0.8141 to 0.8149)			
Main bearing housing bore width	(b)	63.647 to 63.666 (2.5058 to 2.5065) [63.652 to 63.671 (3)] [(2.5060 to 2.5067) (3)]			
Center main bearing housing width over thrust faces	(c)	25.15 to 25.20 (0.990 to 0.992)			
Width between timing idler jackshaft bushings (2)	(d)	47.720 to 47.820 (1.8787 to 1.8827)			

(1) Should replacement become necessary, always replace both bushings
(2) Check with cover and gasket installed and tightened
(3) For 1600 (061.00) - 1800 (062.02 and 061.34) and 2000 (062.12) engines only

Connecting rod

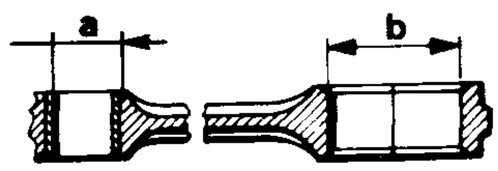

mm (in)

Description		Engine			
		1600	1800	2000	
		(016.00 - 061.00)	(016.78 - 062.02) (061.34)	(016.55 - 062.12)	(017.13)
Small end bore I.D.	(a)	22.005 to 22.015 (0.8663 to 0.8667)			
Big end bore dia.	(b)	53.695 to 53.708 (2.1140 to 2.1145)			

Connecting rod bearings

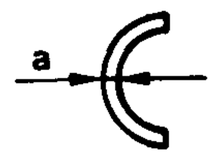

mm (in)

Description			Engine			
			1600	1800	2000	
			(016.00 - 061.00)	(016.78 - 062.02) (061.34)	(016.55 - 062.12)	(017.13)
Connecting rod bearing wall thickness	(a)	Standard Blue	1.835 to 1.841 (0.0722 to 0.0725)			
		Standard Red	1.829 to 1.835 (0.0720 to 0.0722)			

Main bearings

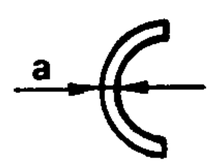

mm (in)

Description			Engine			
			1600	1800	2000	
			(016.00 - 061.00)	(016.78 - 062.02) (061.34)	(016.55 - 062.12)	(017.13)
Main bearing wall thickness	(a)	Standard Blue	1.835 to 1.841 (0.0722 to 0.0725)			
		Standard Red	1.829 to 1.835 (0.0720 to 0.0722)			

Thrust rings

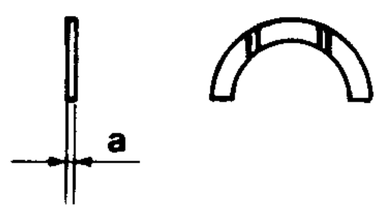

mm (in)

Description			Engine			
			1600	1800	2000	
			(016.00 - 061.00)	(016.78 - 062.02) (061.34)	(016.55 - 062.12)	(017.13)
Thrust ring thickness	(a)	Standard	2.310 to 2.360 (0.0909 to 0.0929)		2.311 to 2.362 (0.0910 to 0.0930) (1)	

(1) For 061.34 engine only

Flywheel

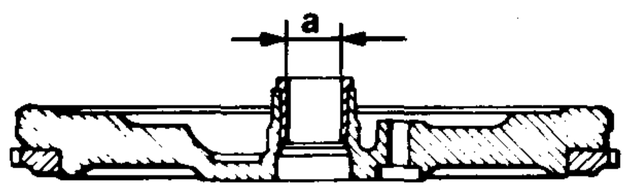

mm (in)

Description			Engine			
			1600	1800	2000	
			(016.00 - 061.00)	(016.78 - 062.02) (061.34)	(016.55 - 062.12)	(017.13)
Center bushing fitted I.D.	(a)	After reaming	26.010 to 26.023 (1.0240 to 1.0245)			

CAMSHAFT, TAPPET, SPRINGS, CYLINDER HEAD AND VALVES

Camshaft

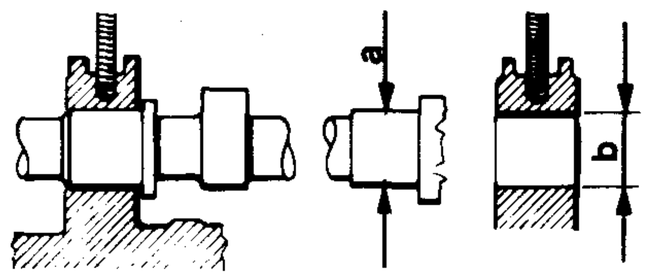

mm (in)

Description		Engine			
		1600	1800	2000	
		(016.00 - 061.00)	(016.78 - 062.02) (061.34)	(016.55 - 062.12)	(017.13)
Camshaft journal diameter	(a)	26.959 to 26.980 (1.0614 to 1.0622)			
Camshaft journal housing bore dia.	(b)	27.000 to 27.033 (1.0630 to 1.0643)			

Tappet

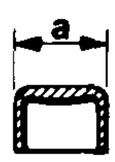

mm (in)

Description			Engine			
			1600	1800	2000	
			(016.00 - 061.00)	(016.78 - 062.02) (061.34)	(016.55 - 062.12)	(017.13)
Tappet diameter	(a)	Standard	34.973 to 34.989 (1.3698 to 1.3775)			
		Oversize	35.173 to 35.189 (1.3848 to 1.3854)			

Springs

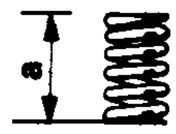

Description			Engine			
			1600	1800	2000	
			(016.00)	(016.78)	(016.55)	(017.13)
Spring length with valve open (a)	Outer spring	mm (in)	27.5 (1.08)			25.5 (1.00)
	Inner spring	mm (in)	26 (1.02)			23.5 (0.93)
Load at length (a)	Outer spring	kg (lb)	35.67 to 37.33 (78.6 to 82.3)		38.7 to 40.3 (85.3 to 88.3)	46.10 to 47.90 (101.6 to 105.6)
	Inner spring	kg (lb)	22.24 to 23.16 (49.0 to 51.1)			24.87 to 25.73 (54.8 to 56.7)

Description			Engine			
			1600	1800	2000	
			(061.00)	(062.02 - 061.34)	(062.12)	
Spring length with valve open (a)	Outer spring	mm (in)	25.5 (1.00)			
	Inner spring	mm (in)	23.5 (0.93)			
Load at length (a)	Outer spring	kg (lb)	46.10 to 47.90 (101.6 to 105.6)			
	Inner spring	kg (lb)	24.87 to 25.73 (54.8 to 56.7)			

Cylinder head

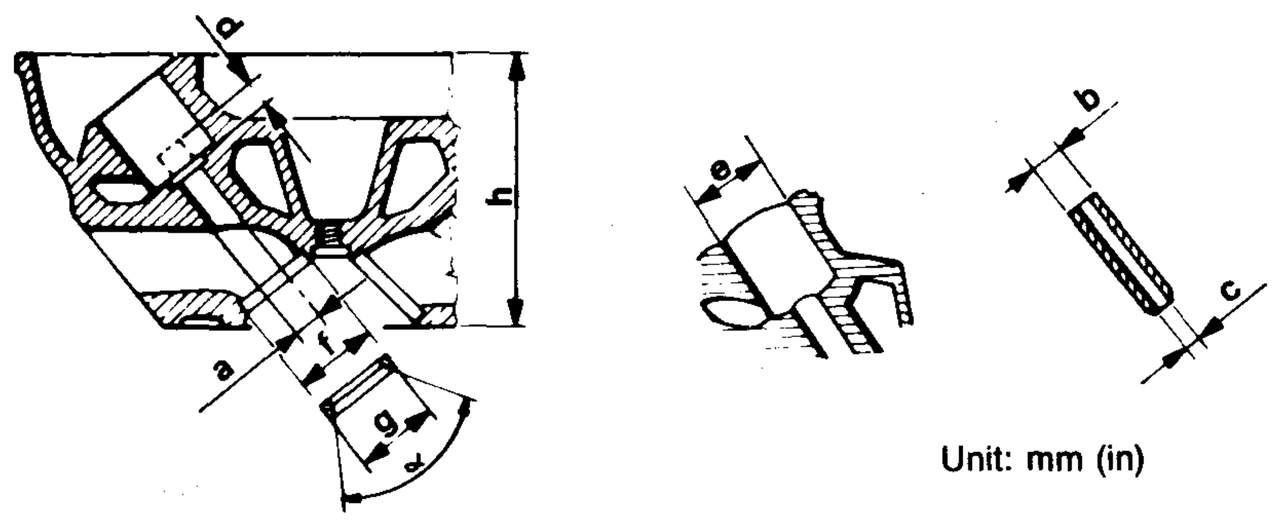

Unit: mm (in)

Description			Engine			
			1600	1800	2000	
			(016.00 - 061.000)	(016.78 - 062.02) (061.34)	(016.55 - 062.12)	(017.13)
Valve guide housing bore dia.	(a)		13.990 to 14.018 (0.5508 to 0.5519)			
Valve guide O.D.	(b)	Intake	14.033 to 14.044 (0.5525 to 0.5529)			
		Exhaust	14.033 to 14.044 (0.5525 to 0.5529) 14.048 to 14.059 (0.5531 to 0.5535) (4)			
Valve guide fitted I.D. (after reaming)	(c)		9.000 to 9.015 (0.3543 to 0.3549)			
Valve guide stand-out	(d)	Intake	13.300 to 13.500 (0.5236 to 0.5315) 11.800 to 12.000 (0.4646 to 0.4724) (3)			
		Exhaust	16.300 to 16.500 (0.6417 to 0.6496) [11.800 to 12.000 (0.4646 to 0.4724)] (5)			
Tappet housing bore dia.	(e)	Standard	35.000 to 35.025 (1.3780 to 1.3789)			
		Oversize	35.200 to 35.225 (1.3858 to 1.3868)			
Valve seat insert housing bore dia.	(f)	Intake (1)	42.532 to 42.557 (1.6745 to 1.6755)		45.000 to 45.025 (1.7717 to 1.7726)	
		Exhaust (1)	38.532 to 38.557 (1.5170 to 1.5180)		41.000 to 41.025 (1.6142 to 1.6152)	
		Intake (2)	42.832 to 42.857 (1.6863 to 1.6873)		45.300 to 45.325 (1.7835 to 1.7844)	
		Exhaust (2)	38.832 to 38.857 (1.5288 to 1.5298)		41.300 to 41.325 (1.6260 to 1.6270)	
Valve seat insert O.D.	(g)	Intake (1)	42.597 to 42.632 (1.6770 to 1.6784)		45.065 to 45.100 (1.7742 to 1.7756)	
		Exhaust (1)	38.597 to 38.632 (1.5196 to 1.5209) 38.642 to 38.658 (1.5213 to 1.5220) (4)		41.065 to 41.100 (1.6167 to 1.6181)	
		Intake (2)	42.897 to 42.932 (1.6889 to 1.6902)		45.365 to 45.400 (1.7860 to 1.7874)	
		Exhaust (2)	38.897 to 38.932 (1.5314 to 1.5328) 38.942 to 36.958 (1.5331 to 1.5338) (4)		41.365 to 41.400 (1.6285 to 1.6299)	
Seat insert face angle	(α)		120°			
Min. cylinder head height after dressing	(h)		111.5 (4.39)			
Max. parallelism error between head faces			0.087 (0.0034)			
Max. head bottom face warpage			0.05 (0.002)			

(1) Standard
(2) Oversize
(3) For 1600 (061.00) and 2000 (017.13) engines only
(4) For 061.34 engine only
(5) For 1600 (061.00), 1800 (062.02) and 2000 (062.12) engines only

Valves

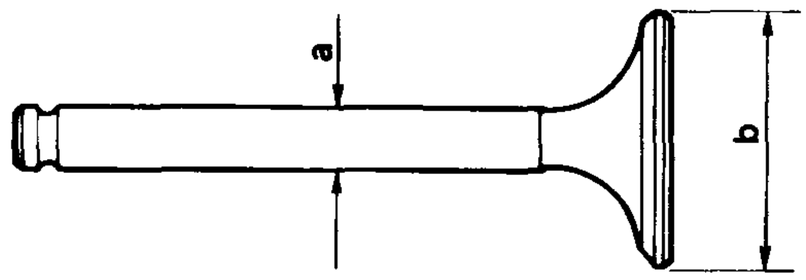

mm (in)

Description			Engine			
			1600	1800	2000	
			(016.00)	(016.78)	(016.55)	(017.13)
Valve stem diameter	(a)	Intake	8.972 to 8.987 (0.3532 to 0.3538)			
		Exhaust	8.935 to 8.960 (0.3518 to 0.3528)			
Valve head dia. - ATE type	(b)	Intake	41.000 to 41.200 (1.6142 to 1.6220)		44.010 to 44.150 (1.7327 to 1.7382)	
		Exhaust	37.000 to 37.200 (1.4567 to 1.4646)		40.010 to 40.150 (1.5752 to 1.5807)	
Valve head dia. - Eaton-Livia type	(b)	Intake	41.000 to 41.150 (1.6142 to 1.6201)		44.000 to 44.150 (1.7327 to 1.7382)	
		Exhaust	37.000 to 37.150 (1.4567 to 1.4626)		40.000 to 40.150 (1.5752 to 1.5807)	

Description			Engine			
			1600	1800	2000	1800
			(061.00)	(062.02)	(062.12)	(061.34)
Valve stem diameter	(a)	Intake	8.972 to 8.987 (0.3532 to 0.3538)	8.972 to 8.987 (0.3532 to 0.3538)		8.972 to 8.987 (2) (0.3532 to 0.3538) (2)
		Exhaust	8.935 to 8.960 (0.3518 to 0.3528)	8.935 to 8.960 (0.3518 to 0.3528) (1)		8.940 to 8.960 (0.3520 to 0.3528) 8.945 to 8.960 (2) (0.3522 to 0.3528) (2)
Valve head dia. - Ate type	(b)	Intake	41.000 to 41.200 (1.6142 to 1.6220)	41.000 to 41.200 (1.6142 to 1.6220)	44.000 to 44.150 (1.7323 to 1.7382)	41.000 to 41.200 (1.6142 to 1.6220)
		Exhaust	37.000 to 37.200 (1.4567 to 1.4646)	37.000 to 37.200 (1.4567 to 1.4646)	40.010 to 40.150 (1.5752 to 1.5807)	37.000 to 37.200 (1.4567 to 1.4646)
Valve head dia. - Eaton-Livia type	(b)	Intake	41.850 to 42.000 (1.6476 to 1.6535)	41.850 to 42.000 (1.6476 to 1.6535)	44.000 to 44.150 (1.7323 to 1.7382)	41.850 to 42.000 (1.6476 to 1.6535)
		Exhaust	37.000 to 37.150 (1.4567 to 1.4626)	37.000 to 37.150 (1.4567 to 1.4626)	40.000 to 40.150 (1.5748 to 1.5807)	37.000 to 37.150 (1.4567 to 1.4626)

(1) ATE exhaust valve stem diameter is 8.940 to 8.960 mm (0.3520 to 0.3528 in) for 2000 engine (062.12)

(2) For Eaton-Livia valve

FITTING DATA

mm (in)

Description		Engine			
		1600	1800	2000	
		(016.00 - 061.00)	(016.78 - 062.02) (061.34)	(016.55 - 062.12)	(017.13)
Liner/piston clearance		0.030 to 0.049 (0.0012 to 0.019) 0.040 to 0.059 (0.0016 to 0.0019) (3)		0.040 to 0.059 (0.0016 to 0.0023)	
Ring/groove clearance	Top compression ring	0.045 to 0.077 (1) (0.0018 to 0.0030) (1) 0.035 to 0.067 (2) (0.0014 to 0.0026) (2)	0.035 to 0.067 (0.0014 to 0.0026)		
	2nd compression ring	0.035 to 0.067 (0.0014 to 0.0026)			
	Oil control ring	0.025 to 0.057 (0.0010 to 0.0022)			
Pin/piston bore clearance	Black	0.003 to 0.008 (0.0001 to 0.0003) 0.004 to 0.009 (0.0002 to 0.0003) (3)			
	White	0.003 to 0.008 (0.0001 to 0.0003)			
Pin/small end clearance	Black	0.008 to 0.021 (0.0003 to 0.0008)			
	White	0.005 to 0.018 (0.0002 to 0.0007)			
Main bearing journal running clearance	Blue	0.004 to 0.045 (0.0002 to 0.0018)			
	Red	0.006 to 0.047 (0.0002 to 0.0019)			
Crankpin running clearance	Blue	0.025 to 0.060 (0.0010 to 0.0024)			
	Red	0.027 to 0.062 (0.0011 to 0.0024)			
Crankshaft end play		0.080 to 0.265 (0.0031 to 0.0104)			
Big end end play		0.2 to 0.3 (0.008 to 0.012)			
Camshaft journal running clearance		0.020 to 0.074 (0.0008 to 0.0029)			
Camshaft end play		0.065 to 0.182 (0.0026 to 0.0072)			
Tappet working clearance		0.011 to 0.052 (0.0004 to 0.0020)			
Valve stem/guide	Intake	0.013 to 0.043 (0.0005 to 0.0017)			
	Exhaust	0.040 to 0.080 (0.0016 to 0.0031) 0.040 to 0.075 (0.0016 to 0.0030) (3) 0.040 to 0.070 (0.0016 to 0.0028) (4)			
Valve guide interference fit	Intake	0.015 to 0.054 (0.0006 to 0.0021)			
	Exhaust	0.015 to 0.054 (0.0006 to 0.0021) 0.030 to 0.069 (0.0012 to 0.0027) (3)			
Seat insert interference fit	Intake	0.04 to 0.10 (0.002 to 0.004)			
	Exhaust	0.04 to 0.10 (0.002 to 0.004) 0.085 to 0.126 (0.0033 to 0.050) (3)			

(1) Borgo piston (2) Mondial piston (3) For 061.34 engine only (4) For Eaton-Livia valve

SHRINK-FIT TEMPERATURE

Component	Temperature
Cylinder head (valve seat installation)	100°C (212°F) 140°C (284°F) (1)
Starter ring gear	120° to 140°C (248 to 284°F)

(1) For 061.34 engine only

GENERAL REQUIREMENTS

FLUIDS AND LUBRICANTS

Application	Type	Name		Quantity - kg (lb)
Rear main bearing cap seals	FLUID	UNION CARBIDE CHEMICALS CO: Ucon Lubricant 50HB-5100 MILLOIL: Lubricant for rubber	Part No. 4500-17502	As required
Crankshaft seals (front and rear)				
— Outer surface	OIL	AGIP SINT 2000 10W50 IP SINTIAX 10W40	Part No. 3631-69352 Part No. 3631-69352	As required
— Lip	GREASE	ISECO	Part No. 3671-69841	As required
Engine oil - full oil pan	OIL	AGIP SINT 2000 10W50 IP SINTIAX 10W40	Part No. 3631-69352 Part No. 3631-69352	4.5 (9.9)
Filter				0.5 (1.1)
Difference between max et min level on dipstick				1.150 (2.54)
Routine changes - pan and filter				5 (11)
Cylinder head well (1)				0.415 (0.91) per well (2)
Spark plug threads	OIL	ISECO: Molykote A	Part No. 4500-18304	As required

(1) Fill only after camshaft removal

(2) With cylinder head completely dry

SEALANTS

Application		Type	Name		Quantity
Front cover screws (to head)	(1)	SEALING COMPOUND	DIRING: Curil	Part No. 3522-00017	As required
Camshaft cover contact surface	(1)	SEALING COMPOUND	DIRING: Heldite	Part No. 3522-00015	As required
Flywheel screws	(2)	SEALING COMPOUND	LOCTITE 270 (green)	Part No. 3524-00009	As required
Timing variator spigot on camshaft	(2)				
Carburetter cushion pad gaskets		SEALING COMPOUND	DIRING Heldite DOW CORNING: Hermetite	Part No. 3522-00015	As required

(1) To remove traces of old gasket from cylinder head or block faces use butyl acetate or methylketone

(2) Before applying sealing compound, remove all traces of old sealant from threads using a suitable brush and compressed air
Always degrease threads using trichloroethylene or chlorothene

ABRASIVES

Application	Type	Name		Quantity
Valves and valve seats	GRINDING PASTE	SIPAL AREXONS: Carbosilicium for valves	Part No. 4100-31502	As required

TIGHTENING TORQUES

Nm (kgm; ft.lb)

Part	Engine			
	1600	1800	2000	
	(016.00 - 061.00)	(016.78 - 062.02) (061.34)	(016.55 - 062.12)	(017.13)
Main bearing cap nuts (wet)	46 to 49 (4.7 to 5; 33.9 to 36.1)			
Flywheel screws (with specified sealant)	110 to 113 (11.2 to 11.5; 81.1 to 83.3)			
Connecting rod cap nuts (wet)	49 to 52 (5 to 5.3; 36.1 to 38.4)			
Crankshaft pulley nut (wet)	187 to 195 (19 to 20; 137.9 to 143.8)			
Variator on camshaft				98 to 117 (10 to 12; 72.3 to 86.3)
Variator gear lockring (wet)				108 to 118 (11 to 12; 79.7 to 87.0)
Cylinder head nut tightening sequence (1)	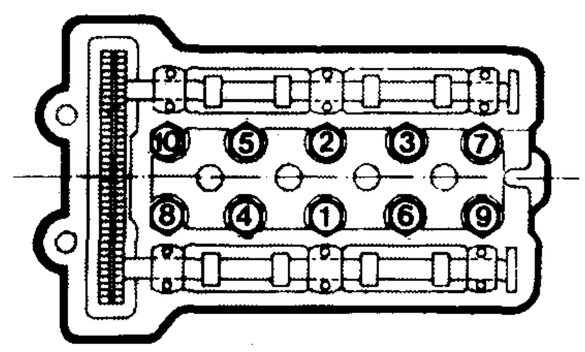			
a) On head installation proceed as follows: — with engine cold, tighten progressively in proper sequence with washers, nuts and threads lubricated	77 to 79 (7.9 to 8.1; 56.8 to 58.3)	71 to 73 (7.2 to 7.4; 52.3 to 53.8)	77 to 79 (7.9 to 8.1; 56.8 to 58.3)	
— with engine warm, tighten without slackening	82 to 83 (8.4 to 8.5; 60.5 to 61.2)	75 to 76 (7.6 to 7.7; 55.3 to 56.1)	82 to 83 (8.4 to 8.5; 60.5 to 61.2)	
b) After 1000 km (620 mi.), slacken nuts one at a time by one turn in proper sequence when engine is cold, lubricate washer and nut contact surfaces and re-tighten	86 to 88 (8.8 to 9; 63.4 to 64.9)	76 to 78 (7.8 to 8; 56.1 to 57.5)	86 to 88 (8.8 to 9; 63.4 to 64.9)	
Camshaft bearing cap nuts (wet)	20 to 22 (2 to 2.25; 14.8 to 16.2)			
Main bearing locknut (wet)	11 to 13 (1.1 to 1.3; 8.1 to 9.6)			
Camshaft cover knobs	14 to 20 (1.4 to 2; 10.3 to 14.8)			
Front cover and water pump nuts	14 to 22 (1.36 to 2.25; 10.3 to 16.2)			
Spark plugs	25 to 34 (2.5 to 3.5; 18.4 to 25.1)			
Coolant temperature sending unit on intake manifold	34 to 39 (3.5 to 4; 25.1 to 28.8)			
High coolant temperature indicator sending unit on cylinder head	20 to 25 (2 to 2.5; 14.8 to 18.4)			
Thermostat cover screws (2)	10 to 16 (1 to 1.6; 7.4 to 11.8)			
Nuts securing turbocharger to exhaust manifold (3)		38 to 47 (3.9 to 4.8; 28 to 34.6)		
Nuts securing turbochager exhaust gas union to turbine (3)		38 to 47 (3.9 to 4.8; 28 to 34.6)		
Bolts securing turbocharger exhaust gas union to exhaust pipe (3)		19 to 24 (1.9 to 2.4; 14 to 17.7)		
Nuts securing exhaust manifold to cylinder head (3)		19 to 24 (1.9 to 2.4; 14 to 17.7)		
Bolts securing turbocompressor lower support to engine block (3)		19 to 24 (1.9 to 2.4; 14 to 17.7)		
Bolts securing turbocharger to lower support (3)		19 to 24 (1.9 to 2.4; 14 to 17.7)		
Bolts securing oil delivery hose to turbocompressor (3)		19 to 24 (1.9 to 2.4; 14 to 17.7)		
Nut securing oil filter support (3)		19 to 24 (1.9 to 2.4; 14 to 17.7)		
Bolt securing oil delivery hose union to engine block (3)		40 to 50 (4.0 to 5.0; 29.5 to 36.8)		
Bolt securing water delivery hose union to turbocharger (3)		50 to 62 (5.0 to 6.2; 36.8 to 45.7)		
Bolt securing water delivery hose union to engine block (3)		50 to 62 (5.0 to 6.2; 36.8 to 45.7)		

(1) Proceed as described in paragraph b) for service coupons A and B (2) Excluding 061.34 engine (3) For 061.34 engine only

TROUBLESHOOTING

Defect	Possible cause	Remedy
Engine noisy. Crankshaft knocks	Excessive bearing journal or crankpin clearance and/or excessive play at thrust rings	Replace bearings and/or thrust rings
Pistons and connecting rods knock	• Improper installation • Pin shifts sideways	Remove and install correctly Remove and install correctly
Camshafts and valves knock	• Excessive valve clearance • Bad tappet fit • Failed valve spring • Worn camshafts	Adjust Replace Replace Replace
Water pump noisy	Excessive impeller shaft bearing clearance	Replace water pump

Other mechanical problems

Burnt valves	• Incorrect valve clearance • Failed valve spring	Replace and adjust clearance Replace
Excessive piston and cylinder liner wear	• Bad piston fit • Poor quality oil • Air cleaner dirty or ineffective • Fuel mixture too rich	Install correctly Use suitable oil Replace air cleaner Adjust or replace carburetter
Damaged connecting rod bearing	• Oil starvation • Poor quality oil • Crankpins worn or out-of-round • Crankpin/bearing grade mismatched	Check lubrication system Use suitable oil Re-condition or replace Replace
Damaged main bearing	• Oil starvation • Poor quality oil • Main bearing journals worn or out-of-round • Main journal/bearing grade mismatched	Check lubrication system Use suitable oil Re-condition or replace Replace
Timing chain and chain tensioner noisy	• Worn chain • Incorrect chain tension • Noisy tensioner	Replace Adjust tensioner Replace
Incorrect ignition timing	Distributor incorrectly installed	Adjust

Lubrication

Oil leakage	• Loose drain plug • Leakage past oil pan gasket • Leakage past camshaft cover gasket and/or seals • Leakage past crankshaft seals and gaskets • Leakage past filter gasket	Tighten Replace gasket Replace gasket and seals Replace worn gasket and seals Tighten filter
Low oil pressure	• Clogged pressure regulating valve • Poor quality oil	Clean valve Change oil

TURBOCHARGER TROUBLESHOOTING

Defect	Possible cause	Remedy
Turbocharger noisy or vibrating	• Inefficient lubrication of rotor arm bearings	Check engine oil pressure and turbocharger oil ducts
	• Leakage into the intake or exhaust manifold	Tighten screws of defective connections and/or replace gaskets
	• Rotor shaft unbalanced	Replace turbocharger
Supercharging pressure too low (check pressure gauge) or insufficient engine power	• Leakage in the section between turbocharger and cylinder head	Tighten the retaining screws and/or replace defective gaskets
	• Waste-gate valve badly adjusted	Adjust waste-gate valve and replace if necessary
	• Waste-gate valve does not close	
	• Supercharging pressure regulating valve open	Check valve
	• Exhaust pipe clogged	Clear or replace
	• Air filter clogged	Replace air filter
	• Intercooler clogged	Clean intercooler
Supercharging pressure too high (check pressure gauge)	• Waste-gate valve badly adjusted	Adjust waste-gate valve
	• Waste-gate valve blocked in closed position (stem bent)	Replace waste-gate valve
Oil leakage from rotor shaft gaskets (blue exhaust fumes)	• Faulty oil return to engine	Check for obstruction
	• Oil leakage into turbine	Excessively worn rotor segments Replace turbocharger
	• Engine oil filter clogged	Replace oil filter
	• Turbocharger rotor gasket worn	Replace turbocharger

NOTE:
Supercharged engines are also subject to all the classic troubles (noise, etc.) of induction engines.

SERVICE TOOLS

Reference number	Description	Page
A.2.0117	Cylinder liner retainer (2 pieces)	01-29
A.2.0145	Flywheel retainer	01-31
A.2.0146	Cylinder head removal tool	01-29
A.2.0192	Valve support	01-34
A.2.0195	Cylinder head support base	01-33
A.2.0196	Cylinder head support fork	01-33
A.3.0103/0006	Valve spring compressor	01-34
A.3.0103/0010	Valve spring compressor lever support	01-34

Reference number	Description	Page
A.3.0113	Rear main bearing cap seal installer	01-47
A.3.0134	Valve guide remover	01-37
A.3.0139/0001	Rear main bearing cap remover lever	01-32
A.3.0139/0002	Rear main bearing cap puller	01-32
A.3.0146	Front crankshaft seal installer	01-50
A.3.0178	Rear crankshaft seal installer	01-47
A.3.0210	Timing idler bushing puller, adjustable from 15 to 22 mm (0.6 to 0.9 in) dia.	01-40
A.3.0244	Intake valve guide seal installer	01-44
A.3.0246	Intake valve guide installer	01-38

Reference number	Description	Page
A.3.0247	Valve guide seal remover	01-34
A.3.0324	Valve spring compressor lever	01-34
A.5.0103	Camshaft rotator	01-51
C.6.0122	Top dead center gauge	01-52
C.6.0148	Cylinder liner/piston standout gauge	01-40
C.6.0168	Valve clearance gauge	01-45
C.8.0103	Idler gear bushing plug gauge	01-40
U.2.0040	Idler gear bushing roughing reamer	01-47
U.2.0041	Idler gear bushing finishing reamer	01-47